Regular Council Meeting
Agenda

Date: Tuesday, April 11, 2023, 7:00 pm
Location: Tecumseh Town Hall - Council Chambers
917 Lesperance Road
Tecumseh, Ontario N8N 1W9

Pages

A. Roll Call

B. Order

C. Report Out of Closed Meeting

D. Moment of Silence

E. National Anthem

F. Land Acknowledgement

We acknowledge that we are on land and surrounded by water, originally inhabited by Indigenous Peoples who have travelled this area since time immemorial. This territory is within the lands honoured by the Wampum Treaties; agreements between the Anishinaabe, Haudenosaunee, Lenni Lenape and allied Nations to peacefully share and care for the resources around the Great Lakes. Specifically, we would like to acknowledge the presence of the Three Fires Confederacy Ojibwe, Odawa, Potawatomi and Huron/Wendat Peoples. We are dedicated to honouring Indigenous history and culture while remaining committed to moving forward respectfully with all First Nations, Inuit and Métis.

G. Disclosure of Pecuniary Interest

H. Minutes

3. Special Council Meeting - March 28, 2023 - Procurement Policy and Customer Service Council Workshop 20 - 22

Recommendation
Moved by _____
Seconded by _____
That the Tuesday, March 28, 2023 minutes of the Regular Council, the Special Council meeting and the Public Council meeting as were duplicated and delivered to the members, **be adopted**.

I. Supplementary Agenda Adoption

J. Delegations

K. Communications - For Information

1. Ministry of Accessibility and Seniors dated March 28, 2023 23 - 23

   Re: Call for Nominations - 2023 Ontario Senior of the Year

2. Ministry of the Attorney General dated March 24, 2023 24 - 25

   Re: Ontario Provincial Offences Act

Recommendation
Moved by _____
Seconded by _____
That Communications - For Information 1 and 2 as listed on the Tuesday, April 11, 2023 Regular Council Agenda, **be received**.

L. Communications - Action Required

M. Committee Minutes

N. Reports

1. Community & Recreation Services

   a. CRS-2023-05 Essex Power Youth in Community Fund 26 - 30

   Recommendation
   Moved by _____
   Seconded by _____
   That Parks and Recreation Report No. CRS-2023-05, regarding the Essex Power Youth in Community Fund, **be received** for information.

2. Public Works & Engineering Services

a. PWES-2023-29 LAS Sewer and Water Line Warranty Program Service Line Warranties of Canada Inc. Agreement Renewal Term 31 - 48

Recommendation

Moved by _____

Seconded by _____

That notice **be provided** to Service Line Warranties of Canada Inc. that the Town intends to allow the 'Renewal Term' within section 3(a) of the Agreement to commence, whereby the Agreement will automatically renew for one additional year starting September 27, 2023.

b. PWES-2023-31 Municipal Class Environmental Assessment Notice of Amendment 49 - 303

Recommendation

Moved by _____

Seconded by _____

That Report PWES-2023-31 titled "Municipal Class Environmental Assessment – Notice of Amendment," **be received**.

c. PWES-2023-32 Supply of Various Vehicles 304 - 320

Recommendation

Moved by _____

Seconded by _____

That Administration **be authorized** to obtain quotations for the 2023 Supply of Various Vehicles as summarized in Attachment 1 to Report PWES-2023-32;

And that the equipment summarized in Attachment 2 to Report PWES-2023-32 **be declared** surplus and disposed of through Part VI, Disposal of Surplus or Scrap Materials and Equipment of the Town's Purchasing Policy;

And further that Appendix A titled "Town of Tecumseh 2023-2032 Ten Year Fleet Funding and Replacement Schedules" and Appendix B titled "Town of Tecumseh 2023-2032 Ten Year Fire and Rescue Services Apparatus Funding and Replacement Schedules" attached to Report PWES-2023-32, **be adopted** as amended;

And furthermore that funding for the purchase of the 2023 Supply of Various Vehicles outlined in Appendix A in the amount of $939,500 plus associated costs for outfitting, $18,000, for a total of 957,500 **be funded** from the Lifecycle Fleet Reserve.

d. PWES-2023-33 12th Concession Road Watermain Replacement Project – Tender Award 321 - 328

Recommendation

Moved by _____

Seconded by _____

That the tender for the 12th Concession Road Watermain Replacement Project in the amount of $195,900 (excluding HST) **be awarded** to SheaRock Construction Group Inc;

And that By-law 2023-48 be given first, second, third and final reading, **to authorize** the Mayor and Clerk to execute an agreement, satisfactory in form to the Town's Solicitor with SheaRock Construction Group Inc.;

And further that project funding allocations, reflecting a total budget requirement of $296,000, with a $16,000 increase to the original allocation, **be accommodated** as follows:

- Watermain Reserve Fund – increase from $280,000 to $296,000

e. PWES-2023-20 Amendment to the East Townline Drain (St. Clair) Drainage Assessment Schedule 329 - 332

Recommendation

Moved by _____

Seconded by _____

That Report PWES-2023-20 regarding a correction to Schedule A of By-law 2022-096, being a by-law which amended the drainage assessments estimated in the engineer's report based on actual costs incurred for the construction of the East Townline Drain (St. Clair Outlet), **be received**;

And that the recommended update to Schedule A of By-law 2022-096 **be approved** through the adoption of Amending By-law 2023-024.

O. By-Laws

1. By-Law 2023-048 Tender Award for 12th Concession Road Watermain 333 - 337

Being a By-law to authorize the execution of an Agreement between The Corporation of the Town of Tecumseh and Shearock Construction Group Inc., for the 12th Concession Road Watermain Mun. 2737 to Mun. 2773

2. By-Law 2023-049 Provincial Gas Tax Transit Grant 338 - 342

Being a by-law to authorize the execution of a Letter of Agreement between The Corporation of the Town of Tecumseh and Her Majesty the Queen in Right of Ontario as represented by the Minister of Transportation for Ontario relating to funding under the Dedicated Gas Tax Funds for Public Transportation

3. By-Law 2023-050 Appointments By-law - Bylaw Officer 343 - 344

Being a by-law to Appoint a By-Law Enforcement Officer for the Corporation of the Town of Tecumseh

4. By-Law 2023-024 East Townline Drain 345 - 346

Being a by-law to amend By-Law 2022-09, being a by-law to amend drainage assessment estimated in engineer reports based on actual costs incurred for the construction of the East Townline Drain (St. Clair Outlet)

5. By-Law 2023-021 Demonte Drain - 3rd and Final Reading 347 - 403

Being a by-law to provide for the repair and improvements to the Demonte Drain

6. By-Law 2023-022 Gouin Drain 3rd and Final Reading 404 - 529

Being a by-law to provide for the repair and improvements to the Gouin Drain

P. Unfinished Business

1. April 11, 2023 530 - 530

Q. New Business

R. Motions

1. Confirmatory By-Law 2023-051 531 - 532

Recommendation
Moved by _____
Seconded by _____
That By-Law 2023-051 being a by-law to confirm the proceedings of the Tuesday, April 11, 2023, regular meeting of the Council of The Corporation of the Town of Tecumseh **be given** first, second, third and final reading.

S. Notices of Motion

T. Next Meeting

Monday, April 24, 2023

4:00 pm Special Council Meeting - Strategic Priorities

Tuesday, April 25, 2023

4:30 pm Court of Revision - 11th Concession

5:00 pm Public Council Meeting - ZBA 1650 Shawnee Road

5:30 pm Public Council Meeting - New Building Fees By-Law

6:00 pm Special Council Meeting - Turkey Creek Watershed Hydrologic and Modelling Study

7:00 pm Regular Council Meeting

U. Adjournment

Recommendation

Moved by _____

Seconded by _____

That there being no further business, the Tuesday, April 11, 2023 meeting of the Regular Council **be adjourned** at pm.

Regular Meeting of Council

Minutes

Date:	Tuesday, March 28, 2023
Time:	7:00 pm
Location:	Tecumseh Town Hall - Council Chambers 917 Lesperance Road Tecumseh, Ontario N8N 1W9

Present:
Mayor, Gary McNamara
Deputy Mayor, Joe Bachetti
Councillor, James Dorner
Councillor, Alicia Higgison
Councillor, Brian Houston
Councillor, Tania Jobin
Councillor, Rick Tonial

Also Present:
Chief Administrative Officer, Margaret Misek-Evans
Deputy Clerk & Manager Legislative Services, Jennifer Alexander
Director Public Works & Engineering Services, Phil Bartnik
Director Community Safety & Fire Chief, Wade Bondy
Director Technology & Client Services, Shaun Fuerth
Director Development Services, Brian Hillman
Director Financial Services & Chief Financial Officer, Tom Kitsos
Deputy Clerk - Clerks Services & Policy Advisor, Christina Hebert
Director Legislative Services & Clerk, Robert Auger
Manager Customer Service, Amanda Circelli
Director Community & Recreation Services, Beth Gignac

A. Roll Call

B. Order

The Mayor calls the meeting to order at 7:10 pm.

C. Report Out of Closed Meeting

There was no Closed meeting scheduled.

D. Moment of Silence

The Members of Council and Administration observe a Moment of Silence.

E. National Anthem

The Members of Council and Administration observe the National Anthem of O Canada.

F. Land Acknowledgement

We acknowledge that we are on land and surrounded by water, originally inhabited by Indigenous Peoples who have travelled this area since time immemorial. This territory is within the lands honoured by the Wampum Treaties; agreements between the Anishinaabe, Haudenosaunee, Lenni Lenape and allied Nations to peacefully share and care for the resources around the Great Lakes. Specifically, we would like to acknowledge the presence of the Three Fires Confederacy Ojibwe, Odawa, Potawatomi and Huron/Wendat Peoples. We are dedicated to honouring Indigenous history and culture while remaining committed to moving forward respectfully with all First Nations, Inuit and Métis.

G. Disclosure of Pecuniary Interest

There is no pecuniary interest declared by a Member of Council.

H. Minutes

1. Regular Council Meeting - March 14, 2023
2. Special Council Meeting - March 14, 2023, Awards

Motion: RCM - 73/23

Moved by Councillor Alicia Higgison
Seconded by Councillor Rick Tonial

That the March 14, 2023 minutes of the Regular Council meeting, and the Special Council meeting, as were duplicated and delivered to the members, **be adopted**.

Carried

I. Supplementary Agenda Adoption

Motion: RCM - 74/23

Moved by Councillor Alicia Higgison
Seconded by Councillor Brian Houston

That the addition of the Supplementary item Report TCS-2023-02 Citizen Satisfaction Survey, **be approved.**

Carried

J. Delegations

1. Citizen Satisfaction Survey

Re: Nik Nanos, Chief Data Scientist and Founder, Nanos Research

Mr. Nanos presents the 2023 Citizen Satisfaction Survey as appended to Report TCS-2023-02 on the agenda and responds to questions from the Members.

a. TCS-2023-02 2023 Citizen Satisfaction Survey

Motion: RCM - 75/23

Moved by Councillor Alicia Higgison
Seconded by Councillor Tania Jobin

That Report TCS-2023-02 2023 Citizen Satisfaction Survey **be brought forward** on the agenda for discussion and consideration;

And that the final report from Nanos Research Corporation (Nanos Research) summarizing the results of the 2023 Citizen Satisfaction Survey, **be received**.

Carried

K. Communications - For Information

1. Municipality of Chatham - Kent dated March 8, 2023

Re: Municipal Insurance Costs

2. Ministry of Natural Resources and Forestry dated March 17, 2023

Re: Public Lands Act - O. Reg 161/17

3. Ministry of the Environment, Conservation and Parks dated March 10, 2023

Re: Environmental Assessments

4. Municipality of Chatham - Kent dated March 6, 2023

Re: Support Bill 5 - Stopping Harassment and Abuse by Local Leader Act

Motion: RCM - 76/23

Moved by Councillor Rick Tonial
Seconded by Councillor Alicia Higgison

That Communications - For Information 1 through 4 as listed on the Tuesday, March 28, 2023 Regular Council Agenda, **be received**.

Carried

L. Communications - Action Required

Motion: RCM - 77/23

Moved by Councillor Alicia Higgison
Seconded by Councillor Rick Tonial

That Town of Tecumseh Council **supports** the Municipality of Chatham-Kent's March 6, 2023 resolution on Municipal Insurance Costs and that a letter in support thereof be sent by administration**.**

Carried

M. Committee Minutes

1. Court of Revision - March 14, 2023, Demonte and Gouin Drains

Motion: RCM - 78/23

Moved by Councillor Alicia Higgison
Seconded by Councillor James Dorner

That the March 14, 2023 minutes of the Court of Revision for the Demonte and Gouin Drains as presented and delivered to the members, **be adopted**.

Carried

N. Reports

1. Community & Recreation Services

a. CRS-2023-04 Windsor Essex Community Foundation Grant Agreement

Motion: RCM - 79/23

Moved by Deputy Mayor Joe Bachetti
Seconded by Councillor Brian Houston

That Report CRS-2023-04 Windsor Essex Community Foundation Grant Agreement **be received;**

That By-Law 2023-041 to authorize the Mayor and Clerk to execute a Grant Agreement between the Windsor-Essex Community Foundation and The Corporation of the Town of Tecumseh in form satisfactory to the Town Solicitor to provide funding in the amount of $15,000 in support of the commemorative sculpture of Chief Tecumseh, be considered for first, second third and final reading.

Carried

2. Community Safety & Fire Services

a. CS-2023-02 Fire and Rescue Aerial Platform Tender Award

Motion: RCM - 80/23

Moved by Councillor Brian Houston
Seconded by Councillor Rick Tonial

That the proposal submitted by Fort Garry Fire Trucks Ltd. for the supply of an aerial platform fire apparatus, in the amount of $2,470,597.30 (exclusive of HST) **be accepted**;

And that the Mayor and Clerk **be authorized** to enter into a contract with Fort Garry Fire Trucks Ltd. for the supply of an aerial platform fire apparatus;

And further that funding for purchase of the apparatus be increased from $1,900,000 to $2,514,080 ($2,470,597.30 + net HST), to be funded from the Fire Apparatus Lifecycle Reserve.

Carried

3. Development Services

a. DS-2023-07 Zoning By-Law Amendment, Condition of Consent, Application B-05-23, 1650 Shawnee Road, Scheduling of a Public Meeting

Motion: RCM - 81/23

Moved by Councillor Rick Tonial
Seconded by Councillor James Dorner

That Report DS-2023-07 entitled “Zoning By-law Amendment, Condition of Consent B-05-23, 1650 Shawnee Road, Scheduling of a Public Meeting”, **be received;**

And that the scheduling of a public meeting, to be held on Tuesday, April 25, 2023 at 5:00 p.m., in accordance with the *Planning Act* for a zoning by-law amendment application submitted for a 0.19 hectare (0.46 acre) parcel of land situated on the east side of Shawnee Road, approximately 80 metres (262 feet) north of its intersection with Westlake Drive (1650 Shawnee Road), seeking to amend Zoning By-law 85-18 by rezoning the subject land from “Neighbourhood Commercial Zone (C2-2)” to a site-specific “Residential Zone 1 (R1-19)” in order to remove the currently permitted use of a fish bait manufacturing facility and to facilitate the construction of two single unit detached dwellings, each on its own lot, and to establish site-specific lot provisions, in accordance with Condition 5 of Consent Application B-05-23, **be authorized**.

Carried

4. Financial Services

a. FS-2023-03 Statement of Council Renumerations and Expenses Paid in 2022

Motion: RCM - 82/23

Moved by Deputy Mayor Joe Bachetti
Seconded by Councillor Rick Tonial

That Report FS-2023-03 Statement of Council Remuneration and Expenses Paid in 2022 **be received**.

Carried

5. Legislative & Clerk Services

a. LCS-2023-10 Town of Tecumseh Heritage Committee

Motion: RCM - 83/23

Moved by Councillor Brian Houston
Seconded by Councillor James Dorner

That Report LCS-2023-10 Town of Tecumseh Heritage Advisory Committee **be received**;

And that the Town of Tecumseh Heritage Advisory Committee, **be dissolved;**

And further that going forward any requests for heritage listing or designation **be administered** through the Town of Tecumseh Development Services Department.

Carried

6. Public Works & Engineering Services

a. PWES-2023-28 Lesperance Road Storm Pump Station Emergency Repair

It is recommended that Administration look into pillars at the Lesperance Road Storm Pump Station for protective measures.

Motion: RCM - 84/23

Moved by Councillor Rick Tonial
Seconded by Councillor Brian Houston

That Report PWES-2023-28 Lesperance Road Storm Pump Station – Emergency Repair, **be received**;

And that repairs to the damaged Lesperance Road Storm Pump Station, in the estimated amount of $260,000, **be funded** from the Storm Lifecycle Reserve Fund.

Carried

7. Technology & Client Services

This report was brought forward on the agenda to Delegations for discussion and consideration.

O. By-Laws

1. By-Law 2023-041 Windsor-Essex Community Foundation Agreement

Being a by-law to approve the execution of an agreement between the Corporation of The Town of Tecumseh and the Windsor-Essex Community Foundation

2. By-Law 2023-042 Fire & Rescue Aerial Platform Tender Award

Being a by-law to authorize the execution of an Agreement between The Corporation of the Town of Tecumseh and Fort Garry Fire Trucks Limited for the purchase of a Tecumseh Fire and Rescue Aerial Platform Truck

3. By-Law 2023-043 Request to Consider Engineers Report – 11th Concession Drain Branch

Being a by-law to provide for the repair and improvements to the 11th Concession Drain Branch

4. By-Law 2023-008 Antaya Drain - Third and Final Readings

Being a by-law to provide for the repair and improvement to the Antaya Drain

5. By-Law 2023-009 Branch of South Talbot and Holden Outlet Drain – Meo Bridge - Third and Final Reading

Being a by-law to provide for the repair and improvements to the Branch of South Talbot and Holden Outlet Drain – Meo Bridge

Motion: RCM - 85/23

Moved by Councillor Alicia Higgison
Seconded by Councillor Rick Tonial

That By-Law 2023-041 being a by-law to approve the execution of an agreement between The Corporation of The Town of Tecumseh and the Windsor-Essex Community Foundation;

That By-Law 2023-042 being a by-law to authorize the execution of an Agreement between The Corporation of the Town of Tecumseh and Fort Garry Fire Trucks Limited for the purchase of a Tecumseh Fire and Rescue Aerial Platform Truck;

That By-Law 2023-043 being a by-law to provide for the repair and improvements to the 11th Concession Drain Branch.

Be given first and second reading.

Carried

Motion: RCM - 86/23

Moved by Councillor Alicia Higgison
Seconded by Councillor Tania Jobin

That By-Law 2023-041 being a by-law to approve the execution of an agreement between The Corporation of The Town of Tecumseh and the Windsor-Essex Community Foundation;

That By-Law 2023-042 being a by-law to authorize the execution of an Agreement between The Corporation of the Town of Tecumseh and Fort Garry Fire Trucks Limited for the purchase of a Tecumseh Fire and Rescue Aerial Platform Truck;

That By-Law 2023-008 being a by-law to provide for the repair and improvements to the Antaya Drain;

That By-Law 2023-009 being a by-law to provide for the repair and improvements for the Branch of South Talbot and Holden Outlet Drain - Meo Bridge.

Be given third and final reading.

Carried

P. Unfinished Business

1. March 28, 2023

   The Members receive the Unfinished Business listing for Tuesday, March 28, 2023.

Q. New Business

There are no New Business Items presented to Council.

R. Motions

1. Confirmatory By-Law 2023-044

Motion: RCM - 87/23

Moved by Councillor Rick Tonial
Seconded by Councillor James Dorner

That By-Law 2023-044 being a by-law to confirm the proceedings of the Tuesday, March 28, 2023, regular meeting of the Council of The Corporation of the Town of Tecumseh **be given** first, second, third and final reading.

Carried

S. Notices of Motion

There are no Notices of Motion presented to Council.

T. Next Meeting

Tuesday, April 11, 2023

3:30 pm Policies & Priorities Committee Meeting

5:00 pm In Camera Meeting

6:00 pm Public Council Meeting -Tecumseh Hamlet Secondary Plan

7:00 pm Regular Council Meeting

U. Adjournment

Motion: RCM - 88/23

Moved by Deputy Mayor Joe Bachetti
Seconded by Councillor Alicia Higgison

That there being no further business, the Tuesday, March 28, 2023 meeting of the Regular Council **be adjourned** at 9:04 pm.

Carried

_____

Gary McNamara, Mayor

_____

Robert Auger, Clerk

Public Meeting of Council

Minutes

Date:	Tuesday, March 28, 2023
Time:	5:30 pm
Location:	Tecumseh Town Hall - Council Chambers 917 Lesperance Road Tecumseh, Ontario N8N 1W9
Present:	Mayor, Gary McNamara Deputy Mayor, Joe Bachetti Councillor, James Dorner Councillor, Alicia Higgison Councillor, Brian Houston Councillor, Tania Jobin Councillor, Rick Tonial
Also Present:	Chief Administrative Officer, Margaret Misek-Evans Director Legislative Services & Clerk, Robert Auger Director Community Safety & Fire Chief, Wade Bondy Director Technology & Client Services, Shaun Fuerth Director Financial Services & Chief Financial Officer, Tom Kitsos Deputy Clerk & Manager Legislative Services, Jennifer Alexander Deputy Clerk - Clerks Services & Policy Advisor, Christina Hebert Manager Engineering Services, John Henderson Assistant Drainage Superintendent, Joseph Lappalainen Drainage Superintendent, Alessia Mussio

A. Roll Call

B. Call to Order

The Mayor calls the meeting to order at 5:56 pm.

C. Land Acknowledgement

We acknowledge that we are on land and surrounded by water, originally inhabited by Indigenous Peoples who have travelled this area since time immemorial. This territory is within the lands honoured by the Wampum Treaties; agreements between the Anishinaabe, Haudenosaunee, Lenni Lenape and allied Nations to peacefully share and care for the resources around the Great Lakes. Specifically, we would like to acknowledge the presence of the Three Fires Confederacy Ojibwe, Odawa, Potawatomi and Huron/Wendat Peoples. We are dedicated to honouring Indigenous history and culture while remaining committed to moving forward respectfully with all First Nations, Inuit and Métis.

D. Disclosure of Pecuniary Interest

There is no pecuniary interest declared by a Member of Council.

E. Introduction and Purpose of Meeting

The purpose of the meeting is to hear public comments from any affected landowners on the proposed drainage works, set out in the Drainage Report filed by Mark Hernandez, P.Eng., of Dillon Consulting Ltd., dated February 7, 2023.

The Drainage Superintendent provides a background on the Drainage Report as appended on the agenda.

F. Delegations

1. Mark Hernandez, P.Eng., Drainage Engineer

   Mr. Hernandez did not present any further comment on the Drainage Report and was available for questions from the Members. There was no questions from the Members.

G. Communications

1. Public Notice dated March 14, 2023
2. By-Law 2023-043 11th Concession Drain

Motion: PCM - 20/23

Moved By Councillor Brian Houston
Seconded By Councillor James Dorner

That Communications - For Information 1 and 2 as listed on the Tuesday, March 28, 2023 Public Council Meeting Agenda, **be received**.

Carried

H. Reports

1. PWES-2023-27 Request to Consider Engineer's Report 11th Concession Drain Branch

Motion: PCM - 21/23

Moved By Councillor Rick Tonial
Seconded By Deputy Mayor Joe Bachetti

That the Report and Specifications for the 11th Concession Drain Branch (Drain) as prepared by Mark Hernandez, P.Eng., of Dillon Consulting Ltd., dated February 7, 2023, (Drainage Report) **be received**;

And that consideration **be given** to the first and second readings of a provisional by-law to adopt the Drainage Report in accordance with Section 42 of the *Drainage Act* (Act);

And further that notice **be given** to all affected landowners of the Court of Revision to be held on April 25, 2023, in accordance with Section 46(1) of the Act, subject to the adoption of the provisional by-law.

Carried

I. Adjournment

Motion: PCM - 22/23

Moved By Councillor Brian Houston
Seconded By Councillor Tania Jobin

That there being no further business, the Tuesday, March 28, 2023 meeting of the Public Council Meeting **be adjourned** at 6:00 pm.

Carried

_____

Gary McNamara, Mayor

_____

Robert Auger, Clerk

Special Meeting of Council

Minutes

Date:	Tuesday, March 28, 2023
Time:	6:00 pm
Location:	Tecumseh Town Hall - Council Chambers 917 Lesperance Road Tecumseh, Ontario N8N 1W9

Present:
Mayor, Gary McNamara
Deputy Mayor, Joe Bachetti
Councillor, James Dorner
Councillor, Alicia Higgison
Councillor, Brian Houston
Councillor, Tania Jobin
Councillor, Rick Tonial

Also Present:
Chief Administrative Officer, Margaret Misek-Evans
Director Legislative Services & Clerk, Robert Auger
Director Public Works & Engineering Services, Phil Bartnik
Director Community Safety & Fire Chief, Wade Bondy
Director Technology & Client Services, Shaun Fuerth
Director Development Services, Brian Hillman
Director Financial Services & Chief Financial Officer, Tom Kitsos
Deputy Clerk & Manager Legislative Services, Jennifer Alexander
Deputy Clerk - Clerks Services & Policy Advisor, Christina Hebert
Manager Customer Service, Amanda Circelli

A. Roll Call

B. Call to Order

The Mayor calls the meeting to order at 6:22 pm.

C. Land Acknowledgement

We acknowledge that we are on land and surrounded by water, originally inhabited by Indigenous Peoples who have travelled this area since time immemorial. This territory is within the lands honoured by the Wampum Treaties; agreements between the Anishinaabe, Haudenosaunee, Lenni Lenape and allied Nations to peacefully share and care for the resources around the Great Lakes.

Specifically, we would like to acknowledge the presence of the Three Fires Confederacy Ojibwe, Odawa, Potawatomi and Huron/Wendat Peoples. We are dedicated to honouring Indigenous history and culture while remaining committed to moving forward respectfully with all First Nations, Inuit and Métis.

D. Disclosure of Pecuniary Interest

There is no pecuniary interest declared by a Member of Council.

E. Delegations

1. Director Financial Services & Chief Financial Officer

   Re: Procurement Policy

   The Director Financial Services presents the PowerPoint presentation as appended on the agenda. The Mayor opens the floor to the members for questions. There are no questions raised.

   Motion: SCM - 18/23

   Moved By Councillor Tania Jobin
   Seconded By Councillor Brian Houston

   That the presentation entitled "Procurement Policy" as appended on the agenda **be received.**

   Carried

2. Shaun Fuerth, Director, Technology & Client Services and Amanda Circelli, Manager Customer Service

   Re: Customer Service

   The Director Technology and Client Services introduces the new Customer Service Manager, Amanda Circelli. The Manager presents the PowerPoint presentation entitled "Customer Service" as appended on the agenda.

   The Mayor opens the floor to questions from the Members.

   In response to a question raised on tracking customer service inquiries, the Manager explains that she is monitoring inquiry response times and Council will receive a status report on a regular basis. She advises the Members that if residents are calling them to report an issue to direct them to the Town's website and submit a customer service request that will automatically be routed to Cityworks.

   A Member inquired on the protection of Town employees from abusive behaviors on customer service inquiries. The Manager advises on the various measures in place to protect employees from such behaviors.

A Member asks on the process for follow-up with the customer on their inquiry. The Manager outlines the process after 30 days and notification to the customer.

The Mayor explains the volume of calls received by his office and requests access to information on customer inquiry status as critical.

Motion: SCM - 19/23

Moved By Councillor Rick Tonial
Seconded By Councillor Brian Houston

That the presentation entitled "Customer Service" as appended on the agenda **be received.**

Carried

F. Communications

There are no Communication items presented to Council.

G. Reports

There are no Reports presented to Council.

H. Adjournment

Motion: SCM - 20/23

Moved By Councillor Alicia Higgison
Seconded By Councillor James Dorner

That there being no further business, the Tuesday, March 28, 2023 meeting of the Special Council Meeting **be adjourned** at 7:06 pm.

Carried

_____

Gary McNamara, Mayor

_____

Robert Auger, Clerk

Ministry for Seniors and Accessibility

Minister

College Park
777 Bay Street
5th Floor
Toronto ON M7A 1S5

Ministère des Services aux aînés et de l'Accessibilité

Ministre

College Park
777, rue Bay
5e étage
Toronto (Ontario) M7A 1S5

Ontario

March 2023

Dear Mayor, Reeve and Members of Council:

I am writing to invite you to submit a nomination for the 2023 Ontario Senior of the Year Award.

This award gives each municipality the opportunity to honour one of their outstanding local seniors for the contributions they've made to enrich the social, cultural, and civic life of their community.

The deadline for nominations is April 30, 2023.

For more information on how to submit a nomination online, please visit the Senior of the Year webpage. Once you submit a nomination, a personalized certificate with your nominee's name will be sent to you. I encourage you to present it to your nominee in June in conjunction with Seniors Month.

The Ontario government is always delighted to celebrate Seniors Month with municipalities across the province. Seniors have generously given their time, knowledge and expertise to help build this great province that we all enjoy today. It is important that we take the time to celebrate our older population and their valuable contributions.

If you have any questions about the upcoming 2023 Ontario Senior of the Year Award, please contact Ontario Honours and Awards at OntarioHonoursAndAwards@ontario.ca.

Thank you in advance for your support of local seniors and Seniors Month.

Sincerely,

Raymond Cho
Minister for Seniors and Accessibility

Attorney General
McMurtry-Scott Building
720 Bay Street
11th Floor
Toronto ON M7A 2S9
Tel: 416-326-4000
Fax: 416-326-4007

Procureur général
Édifice McMurtry-Scott
720, rue Bay
11e étage
Toronto ON M7A 2S9
Tél.: 416-326-4000
Téléc.: 416-326-4007

Our Reference #: M-2023-2275

March 24, 2023

Dear Heads of Council, Municipal Chief Administrative Officers, and Clerks:

I am pleased to write to you today to provide an update on modernization initiatives in Ontario's *Provincial Offences Act* (POA) courts.

On November 23, 2022, proposed amendments to the POA aimed at modernizing and streamlining processes in POA courts were introduced in the Ontario Legislature as Schedule 8 under Bill 46, the *Less Red Tape, Stronger Ontario Act, 2023.* I am happy to advise that Bill 46 received Royal Assent on March 22, 2023.

As a result, the following changes to the POA have been approved:

Implementation of Amendments to Allow for Clerk Review of Reopening Applications

Currently, the POA allows a defendant convicted of either failing to respond to a charge laid by certificate of offence or of failing to appear for a hearing or early resolution meeting, to apply to have the conviction struck and the matter reopened. Such applications are currently reviewed by a justice of the peace and may be granted if the justice of the peace is satisfied that, through no fault of their own, the defendant was unable to appear for a hearing or an early resolution meeting or did not receive a notice or document relating to the offence.

Effective September 22, 2023, clerks of the court will grant, but not deny, applications to strike a conviction on a ticket, if satisfied that the defendant, through no fault of their own, missed a notice or was unable to attend a meeting or hearing related to the ticket. If the clerk is not able to grant the application and strike the conviction, the clerk must forward the application to a justice of the peace to make the determination whether to grant or deny the request for a reopening.

These amendments will assist municipalities in recovering from the disruption of court operations created by the pandemic by freeing up judicial time and allowing municipal court staff to address the backlog of cases more quickly.

Repeal of the Bill 177 Early Resolution Reforms

Effective March 22, 2023, amendments to section 5.1 of the POA, together with previously proposed sections 5.2 to 5.5 are repealed, although they had not yet come into force. These previously proposed amendments would have changed the "early resolution" process in ways that are no longer desired by stakeholders.

…/2

The Ministry of the Attorney General looks forward to continuing engagement with partners and stakeholders on new opportunities for modernizing the early resolution process.

If you have any questions, or if you would like more information about these initiatives, please contact Ms. Wendy Chen, Manager of the POA Unit, either by email at JUS.G.MAG.POASupport@ontario.ca or by telephone at (437) 244-8733.

Thank you for your continued commitment to the administration of justice and for supporting access to justice services for all Ontarians.

Sincerely,

Doug Downey
Attorney General

c: Wendy Chen, Manager, POA Unit, Court Services Division, Ministry of the Attorney General

The Corporation of the Town of Tecumseh

Community & Recreation Services

To: Mayor and Members of Council

From: Beth Gignac, Director Community & Recreation Services

Date to Council: April 11, 2023

Report Number: CRS-2023-05

Subject: Essex Power Youth in Community Fund

Recommendations

It is recommended:

That Parks and Recreation Report No. CRS-2023-05, regarding the Essex Power Youth in Community Fund, **be received** for information.

Background

In 2014, Essex Power Corporation approved the “Youth in Community” (YIC) Fund policy that distributes funding equally amongst the Shareholders of Essex Power Corporation for Essex Power Corporation to support its communities by sponsoring organizations that offer activities and projects geared towards youth. In accordance with the funding requirements, the Town of Tecumseh is responsible for administering the allocation of the YIC funding and each group that receives funding agrees to identify Essex Power as the sponsor through acknowledgement on various promotional materials including signage, flyers and websites.

YIC Fund programming has continued annually since 2014, and throughout the years has sponsored a variety of recreation programs, events and local sport organizations including Breakfast with Santa, Canada Day Celebration, Christmas in Tecumseh, Earth Day Celebration, In Motion 12 o’clock Walk, McAuliffe Park Sports, Outdoor Movie Nights, Public Recreational Skating/Swimming, St. Mary’s Sports, Summer Concert Series, Tecumseh Minor Baseball Association, Tecumseh Shoreline Minor Hockey

Association, Tecumseh Skating Club, Tecumseh Soccer Association, and the Tecumseh Summer Day Camp.

In 2020 and 2021, in response to the COVID-19 pandemic, a limited number of programs and events were able to run which resulted in surplus of YIC funds going into 2022. In 2022, the Community & Recreation Services department had $11,563 in available YIC funds and was able to offer a significant number of funded events and programs. By the end of 2022 all the funds were used, no longer leaving a surplus. This was reported in the Bi-Annual report to the Essex Power Corporation Board of Directors.

Comments

Administration received confirmation that the Essex Power Corporation (EPC) Board of Directors has once again approved funding for its Shareholders to continue to support organizations that offer activities and projects geared towards youth in 2023. EPC has approved $40,000 Youth in Community Funding to be distributed among its four communities.

The Tecumseh Community and Recreation Services Department is exploring several options to provide the Tecumseh community with opportunities to participate in recreational programs and events in 2023. It is anticipated that YIC funding will support many of these initiatives as it has done in the past.

2023 will be the tenth year of the funding. Over the years, EPC has invested $400,000 to support youth in its four communities of Amherstburg, LaSalle, Leamington and Tecumseh.

According to the funding requirements:

- Fund allocations are restricted by the Corporate Shareholders to a maximum of $2,500 for each youth organization activity/event/project
- Special consideration for funding requests above $2,500 may be given only upon request
- The Corporate Shareholder is the sole administrator and distributor of funds.

The Guidelines and Eligibility Requirements of the Program include:

- Youth organizations activities/events/projects must take place within the shareholder community which is serviced by Essex Power Corporation
- Must be youth driven; eighteen (18) years of age or under
- Must include an element of education, fitness, art/culture, or social responsibility
- Projects benefiting a larger number of youth are given greater consideration
- Essex Power is to be prominently acknowledged as the source of the funding through the placement of Essex Power Corporation’s logo on various promotional items whenever possible.

The Town will be required to provide the Essex Power Board of Directors a bi-annual report detailing fund recipients and amount received.

The Community and Recreation Services department will continue to manage the Town of Tecumseh's allotment of YIC funding by coordinating activities throughout the year through direct programming and partnerships with community groups.

Consultations

Financial Services

Financial Implications

YIC funds available to the Town in support of eligible municipal programs for 2023 total $10,000. Administration expects no additional costs as a result of operating this program. Internal resources will be responsible to ensure compliance with program requirements.

Link to Strategic Priorities

Applicable	2019-22 Strategic Priorities
☒	Make the Town of Tecumseh an even better place to live, work and invest through a shared vision for our residents and newcomers.
☐	Ensure that Tecumseh's current and future growth is built upon the principles of sustainability and strategic decision-making.
☐	Integrate the principles of health and wellness into all of Tecumseh's plans and priorities.
☐	Steward the Town's "continuous improvement" approach to municipal service delivery to residents and businesses.
☒	Demonstrate the Town's leadership role in the community by promoting good governance and community engagement, by bringing together organizations serving the Town and the region to pursue common goals.

Communications

Not applicable ☒

Website ☐ Social Media ☐ News Release ☐ Local Newspaper ☐

This report has been reviewed by Senior Administration as indicated below and recommended for submission by the Chief Administrative Officer.

Prepared by:

Brett Palmer
Senior Manager Recreation Services

Reviewed by:

Beth Gignac, BA Hons
Director Community & Recreation Services

Recommended by:

Margaret Misek-Evans, MCIP, RPP
Chief Administrative Officer

Attachment Number	**Attachment Name**
None	None

The Corporation of the Town of Tecumseh

Public Works & Engineering Services

To: Mayor and Members of Council

From: Phil Bartnik, Director Public Works & Engineering Services

Date to Council: April 11, 2023

Report Number: PWES-2023-29

Subject: LAS Sewer and Water Line Warranty Program
Service Line Warranties of Canada Inc.
Agreement Renewal Term

Recommendations

It is recommended:

That notice **be provided** to Service Line Warranties of Canada Inc. that the Town intends to allow the 'Renewal Term' within section 3(a) of the Agreement to commence, whereby the Agreement will automatically renew for one additional year starting September 27, 2023.

Background

The Local Authority Service (LAS) Sewer and Water Line Warranty Program (Program) offered by Service Line Warranties of Canada Inc. (SLWC) provides residents with the opportunity for a low-cost warranty program that will help repair, replace, or restore this critical infrastructure from the home to the property line, which is often perceived as the municipality's responsibility.

At the July 26, 2016 regular meeting of Council, Council endorsed the Program (Motion: RCM-282/16) and executed a Market Licence Agreement (Agreement) with SLWC on September 27, 2016 to use the Town's name, logo and property information to promote the Program (By-Law 2016-70). Since implementation, Council has extended the

agreement four times from 2019 to 2023 (Motion: RCM-153/19, RCM-140/20, RCM-138/21 and RCM-112/22).

Comments

The Agreement between the Corporation of the Town of Tecumseh and the SLWC was executed on September 27, 2016. The term of the Agreement is three years from the effective date with an automatic renewal of an additional (one) year term, unless one of the parties gives the other written notice at least 90 days prior to the end of the term or renewal term that it does not intend to renew the agreement.

Exhibit A of the Agreement outline three seasonal marketing campaign to promote SLWC's warranty program. Three campaigns should have been carried out per year (spring, fall and winter) to offer three different warranty programs: water service, sewer septic line and in-house plumbing.

Due to unforeseen internal circumstances, SLWC was delayed in rolling out their marketing campaign in 2016. Their first mail-out, to promote their water service line warranty coverage, was delivered to residential property owners in Tecumseh via regular mail in February 2019.

SLWC intends to continue their marketing campaign primarily for the Water Service Line and Sewer Septic Line as they are seeing greater interest in those policies, but secondarily would also offer In-House Plumbing to those that have already enrolled for the other policies. The anticipated upcoming campaign schedule would see letters being mailed out in the Spring, Fall and Winter 2023 and Spring 2024.

SLWC has provided the following updates (as of February 8, 2023):

- Residents Enrolled: 218
- Total Policies: 359
- In House Plumbing: 23
- Sewer Septic Line: 151
- Water Service Line: 185
- Total Claims to Date: 35 (a 40% increase over 2022)

In order for SLWC to continue their marketing campaigns, SLWC has requested an additional one-year Renewal Term which would commence on September 27, 2023. Town Administration will have an opportunity to review and sign off on all future campaign letters prior to mailing and will also be given advance notice of the date for the mailing to ensure that the Town's customer service representatives are advised should any inquiries from the public be received (see Attachment 1 for a sample letter).

The Town will continue to assist in the marketing campaign by communicating the Program on the Town's website and social media avenues. Frequently Asked Questions and a Quick Start Guide will provide information to residents respecting the warranty program (see Attachments 2 & 3).

Consultations

Financial Services
Service Line Warranties of Canada Inc.

Financial Implications

The Town executed a Market Licence Agreement with SLWC in 2016 through By-law 2016-70. The Agreement grants SLWC a non-exclusive license to use the Town's name and logo on "letterhead, advertising, billing and marketing materials".

As consideration for the licence to use the Town's name and logo, SLWC pays the Town 5% of the revenue for warranty products collected from residential property owners during the year. This has resulted in a total of $5,112.08 being collected as outlined below:

- 2019: $ 1,037.52
- 2020: $ 1,248.90
- 2021: $ 1,531.89
- 2022: $ 1,293.77
- Total: $ 5,112.08

Link to Strategic Priorities

Applicable	2019-22 Strategic Priorities
☒	Make the Town of Tecumseh an even better place to live, work and invest through a shared vision for our residents and newcomers.
☐	Ensure that Tecumseh's current and future growth is built upon the principles of sustainability and strategic decision-making.
☒	Integrate the principles of health and wellness into all of Tecumseh's plans and priorities.
☒	Steward the Town's "continuous improvement" approach to municipal service delivery to residents and businesses.
☒	Demonstrate the Town's leadership role in the community by promoting good governance and community engagement, by bringing together organizations serving the Town and the region to pursue common goals.

Communications

Not applicable ☒

Website ☐ Social Media ☐ News Release ☐ Local Newspaper ☐

This report has been reviewed by Senior Administration as indicated below and recommended for submission by the Chief Administrative Officer.

Prepared by:

Dana Reid
Public Works & Engineering Services Assistant

Reviewed by:

Tom Kitsos, CPA, CMA, BComm
Director Financial Services & Chief Financial Officer

Reviewed by:

Phil Bartnik, P.Eng.
Director Public Works & Engineering Services

Recommended by:

Margaret Misek-Evans, MCIP, RPP
Chief Administrative Officer

Attachment Number	**Attachment Name**
1	Sample Letter of marketing campaign
2	LAS Sewer and Water Line Warranty - FAQ
3	Service Line Warranties of Canada – Quick Start Guide
4	Service Line Warranties of Canada – Council Brochure

Service Line Warranties of Canada

<<MR. SAMPLE A SAMPLE_XX>>
<<MAIL_ADDRESS1_XXXXXXX>>
<<MAIL_ADDRESS2_XXXXXXX>>
<<MAIL_CITY_XX, ST ZIP>>

Response Requested:
Within 30 Days

Information Regarding Your Water Service Line

The exterior water service or well line that runs underground on your property and any damage to it is your responsibility. A breakdown to this line from normal wear and tear is not typically covered by basic homeowners insurance. Replacing your exterior water service line could cost thousands of dollars in unplanned repair costs.

The Town of Tecumseh and the **Local Authorities Service (LAS)** have endorsed Service Line Warranties of Canada (SLWC), a leading provider of emergency home repair programs across North America, to offer eligible homeowners Exterior Water Service Line Coverage.

With this *optional* coverage, you will be protected against the cost and inconvenience of exterior water service line breakdowns, including:

- Up to $5,000 per service call for covered repairs
- Multiple service calls annually up to your service call benefit amount
- 24-hour repair hotline
- Priority repair status
- Repairs performed by local, licensed and insured contractors
- One-year guarantee on all covered repairs

Take action to help protect your exterior water service line for just $5.18 per month. Complete and return the enclosed form or call 1-844-616-8444. This program is managed by SLWC, and no public funds were used for the mailing of this letter.

For fastest processing, go to www.slwofc.ca, or complete and return the enclosed form with your payment by <<Month X, XXXX>>.

Service Line Warranties of Canada ("SLWC"), with corporate offices located at 4000 Town Center Boulevard, Suite 400, Canonsburg, PA 15317, is an *independent company separate from your local utility or community* and now offers this optional service plan as an authorized representative of Northcoast Solutions of Canada, ULC, 2200 HSBC Building, 885 West Georgia Street, Vancouver, British Columbia V6C 3E8. Your choice of whether to participate in this service plan will not affect any service you have with your local utility or community.

2004XZX3J116AONZ
RX Black_Bar

Now it's easy to avoid the frustration and cost of unexpected repairs

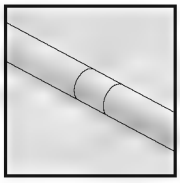

Replace water service line (26–100 ft.)
$2,585
Plan Members: No Charge‡

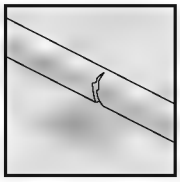

Locate, excavate and repair leak
$798
Plan Members: No Charge‡

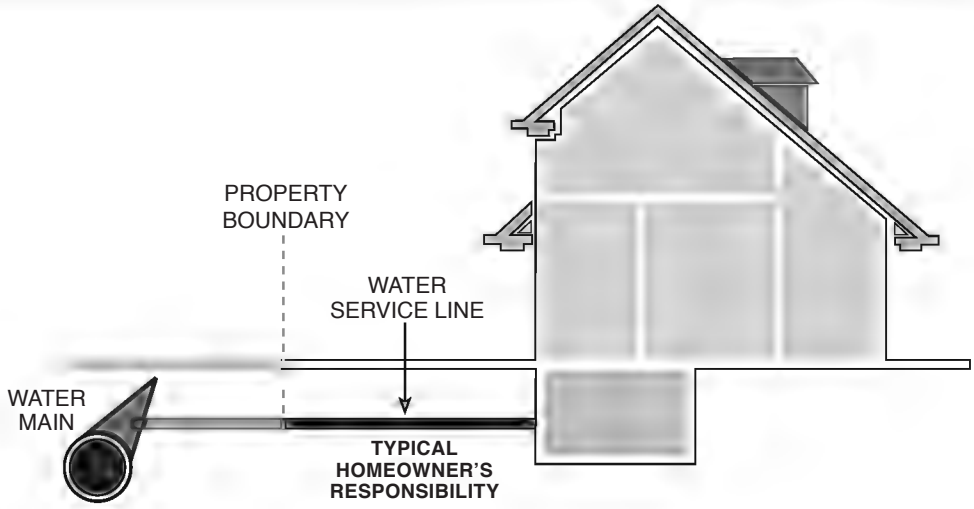

The service line beyond the property boundary may be an additional responsibility of the homeowner and is included in this coverage.
If your home has a private well, coverage also provides protection against repair or replacement of your water service line from the well casing to the external wall of your home.

‡Average repair costs within the SLWC network as of March 2018. No charge for covered repairs up to your service call benefit amount.

For more information

Visit www.slwofc.ca
Call 1-844-616-8444 | Mon-Fri 9am-5pm EST

Important Coverage Information: Eligibility: An owner of both a residential home permanently secured to the ground and the land it is located on may be eligible for coverage. This includes single family homes (inclusive of manufactured housing) and townhomes. Recreational vehicles or homes on wheels and properties used for commercial purposes are not eligible for coverage. Your property is not eligible if you are aware of any pre-existing conditions, defects or deficiencies with your exterior water service line prior to enrollment. If you live in a development community with a condominium, co-op or homeowners association, your exterior water service line may not be an individual homeowner's responsibility, so please check with your association before accepting this coverage. If your entire exterior water service line is shared with any third party or covered by a homeowners', condominium or like association, then you are not eligible for coverage. Benefit Details: Coverage provides, up to the benefit amount, for the covered cost to repair or replace a leaking, frozen, low pressure, or permanently blocked exterior water service line, for which you have sole responsibility or responsibility is shared by no more than one additional dwelling, from your utility's responsibility or external wall of your well casing to the external wall of your home, that is damaged due to normal wear and tear, not accident or negligence. Not covered: Repair to any water line that branches off the main water service line; any shared water line that provides service to multiple properties or secondary buildings; and damage from accidents, negligence or otherwise caused by you, others or unusual circumstances. Additional exclusions apply. Disputes resolved by arbitration, without class action or jury trial, unless otherwise stated in your full Terms and Conditions. Making a Service Call: Your plan starts the day your form is processed, giving you 12 months of coverage during the first year. Cancellation: You may cancel within 30 days of your start date for a full refund (less any claims paid, where applicable). Cancellations after the first 30 days will be effective at the end of the then-current billing month, and you will be entitled to a pro-rata refund less any claims paid (where applicable). You may also contact Service Line Warranties of Canada (SLWC) to cancel if you find your utility or municipality provides similar coverage to you at no charge, and you will receive a refund less any claims paid (where applicable). Renewal: The plan is annual. For E-Z Pay/Direct Pay, credit card or debit card customers, unless you cancel, your plan automatically renews annually at the then-current renewal price with your same payment terms.
To see full Terms and Conditions with complete coverage and exclusion details prior to enrolling call 1-844-616-8444 or go to www.slwofc.ca. SLWC is an independent company, separate from your city, local utility or municipality, providing emergency home repair services and protection solutions to homeowners across North America. If you would prefer not to receive solicitations from SLWC, please call 1-844-616-8444.

E-Z Pay/Direct Pay: A paperless and stress-free way to pay for your coverage. Payments are automatically debited from the bank/checking account of your choice as your payment becomes due, at no additional cost.

2004XZX3J116AONZ
RX1874_Black_Bar

Acceptance Form

<<Mailcode-xxxx>>

For fastest processing, visit www.slwofc.ca.

Please correct name and address information below, if necessary, before submitting.

<<Mr. Sample A. Sample>>
<<Serv_Address1_xxxxxxx>>
<<Serv_Address2_xxxxxxx>>
<<Serv_City, ST Zip>>

By providing my e-mail address, I request that I be notified when my current and future service agreements and any related documents are available at www.slwofc.ca, and I acknowledge that I can access these documents. I can change my preferences or request paper copies online or by calling SLWC.

E-mail: _____ Phone: _____

E-Z PAY (see back of letter)

I have enclosed a check for my first payment of:

☐ $5.18 per month

☐ $15.54 per quarter

☐ $62.16 per year

I authorize SLWC to charge my account for Exterior Water Service Line Coverage at the frequency specified and my financial institution to debit these payments from the account provided. I understand that, regardless of the payment frequency I select, my optional coverage is based on an annual policy and will be *automatically renewed annually* on the same payment terms selected at the then-current renewal price. I understand that I may revoke my authorization at any time without additional cost to me, by calling 1-844-616-8444, subject to providing notice of 10 days. To obtain a sample cancellation form, or for more information on your right to cancel a Pre-Authorized Debit Agreement (PAD), contact your financial institution or visit www.cdnpay.ca. I understand that this is a personal PAD Agreement, and I have certain recourse rights if any debit does not comply with this agreement. For example, you have the right to receive reimbursement for any debit that is not authorized or is not consistent with this PAD Agreement. To obtain more information on your recourse rights, contact your financial institution or visit www.cdnpay.ca. This service contract is provided by Northcoast Solutions of Canada, ULC and is managed by SLWC. I confirm that I am the homeowner and have read the information in this package and meet the eligibility requirements for this service contract. I acknowledge that SLWC may share certain information with Northcoast Solutions of Canada, ULC to facilitate my program. When the form is complete, return in the enclosed postage-paid envelope to: SLWC, PO BOX 328 Canonsburg, PA 15317-9918, or call 1-844-616-8444.
Prices include applicable HST. Additional local tax may apply.

Please respond by

<<x/x/xxxx>>

Signature (required)

PLEASE MAKE PAYABLE TO SLWC

RX1874_Black_Bar 2004XZX3J116AONZ

<<MatchbackID>> .25" .375" <<Mailcode>> .25"

<<Customer_No>>

CREDIT/DEBIT CARD

I authorize SLWC to charge my first and all future payments for Exterior Water Service Line Coverage to my credit/debit card at the frequency specified. I understand that, regardless of the payment frequency I select, my optional coverage is based on an annual contract and will be *automatically renewed annually* on the same payment terms I selected at the then-current renewal price. I have the option to cancel this contract at any time without additional cost to me by calling 1-844-616-8444. I confirm that I am the homeowner and have read the information in this package, understand there are limitations and exclusions, and meet the eligibility requirements for this coverage.

Signature (required)

☐ $5.18 per month
☐ $15.54 per quarter
☐ $62.16 per year

Prices include applicable HST. Additional local tax may apply.

VISA ☐ ☐

Exp. Date:

☐☐/☐☐

Card Number:

☐☐☐☐☐☐☐☐☐☐☐☐☐☐☐☐

ONE-TIME CHECK OR MONEY ORDER

I have enclosed my check or money order for my payment of $62.16, which includes applicable taxes, for optional Exterior Water Service Line Coverage. I confirm that I am the homeowner and have read the information in this package, understand there are limitations and exclusions, and meet the eligibility requirements for this coverage.

Signature (required)

Please be sure to sign and date your check or money order in the amount of $62.16, which includes applicable taxes, for this coverage.
PLEASE MAKE PAYABLE TO SLWC

2004XZX3J116AONZ
RX1874_Black_Bar

Sewer and Water Line Warranty Program Frequently Asked Questions

Why is the warranty program important?
Many people believe that water and sewer lines will last hundreds of years without failing, but the truth is, there are many things other than the life expectancy of the pipes that contribute to infrastructure failure - such as tree-root intrusion, rust and weather. The program provides peace of mind - to municipal homeowners and municipal leadership.

What does this warranty service cover?
The LAS Sewer and Water Line Warranty Service provides homeowners of a participating municipality with access to coverage for their sewer and water laterals leading from the residence to the municipal line. The warranty covers any repair or replacement work on laterals as a result of general decay from age, rusting, tree-root intrusion, and weather related occurrences, including frozen pipes.

What is the program cost for the municipality and homeowners?
There is no cost to the municipality for this program and homeowners participation is completely voluntary. For a small monthly fee (see the pricing page), homeowners can purchase warranty protection that covers repairs to the buried lateral lines on their property. Public funds are never used in the marketing or administration of the program.

How does the program work?
LAS' service partner, SLWC, manages all aspects of the program, including marketing, billing, customer service, contractor management and completion of all repairs to local code. SLWC even handles the mailings to homeowners in your community, with all mailings being pre-approved by the municipality.

Who is eligible for the program?
Single family homeowners are eligible for the program. Rental properties are also eligible for coverage, provided the property owner purchases the warranty. Excluded properties include apartment and high-rise buildings, mobile homes and multi-family units with shared service lines.

Is pre-inspection required before a homeowner can enroll?
Pre-inspection is not required prior to enrollment in the warranty program for any property. During the enrollment process, the homeowner acknowledges that their current service lines are in good working condition per the Terms and Conditions of the program.

What happens when a homeowner experiences a service line issue on their property?
With one call to the SLWC toll-free number, a licensed contractor from the area will be dispatched to make the repair. There is no paperwork to complete, no hidden services fees or deductibles, and no annual limits on the number of repair occurrences. All contractors are thoroughly vetted through a third-party compliance management vendor that performs extensive background checks.

Who completes any necessary repairs?
All work will be performed by a licensed contractor that has successfully passed the necessary requirements to become a member of the SLWC Contractor Network. If a permit or line location is required, proper permitting will be secured before work begins and any necessary repair will conform to applicable plumbing/excavating codes.

What is the water line coverage?
Coverage includes the consumer-owned portion of the primary water service line from a public or municipal water system to the point of entry to the home. The program provides service or repair for the broken or leaking water line serving the home where the flow of the line is interrupted due to normal wear and tear up to $5,000 per occurrence.

What is the sewer lateral coverage?
Coverage includes the consumer-owned portion of the sewer lateral from the point of entry into the home to the point of municipal sewer responsibility (typically the main service line). The program provides service or repair to restore flow to the sewer lateral servicing the residence where the line is impeded due to normal wear and tear, or tree roots, up to $8,000 per occurrence.

What is the warranty on services completed by SLWC?
All repairs are warranted for workmanship and quality for a period of one year by the servicing contractor however, as long as the enrolled customer remains in good standing with the SLWC program, additional repairs are covered as there are no lifetime or annual limits on the number of repairs.

What is the contract term with SLWC?
The contract term is month-to-month. Customers may cancel their warranty at any time without penalty via phone, web, or written correspondence. Homeowners who pay annually receive a prorated refund for any

Contact

Eleonore Schneider
Program Manager
eschneider@amo.on.ca
T 416.971.9856 ext. 320
TF 1.877.426.6527
F 416.971.6191

remaining coverage period.

EXPRESSION OF INTEREST

Let us know if your municipality is interested in learning more about the LAS-endorsed Sewer and Water Line Warranty Program.

LIST OF INFO NEEDED IN EXPRESSION OF INTEREST FORM

- Municipality
- Contact
- Phone Number
- Email
- What is the best time to reach you?

Quick Start Guide

Service Line Warranties Program

Service Line Warranties of Canada

Why Did You Do This Program?

Many residents are not aware that buried water or sewer lines on their property are their responsibility. A broken or blocked water or sewer line can cost hundreds to repair or thousands if a replacement is necessary and many times residents are not prepared for this unexpected expense. Service Line Warranties of Canada (SLWC) not only works to educate residents but also provides a solution.

Why Did You Partner With A 3rd Party?

SLWC has been recognized as the trusted administrator of utility line plans endorsed by Local Authority Services (LAS). Many Cities today are using public/private partnerships and they have been successful in providing cost-effective services to citizens. Partnering with SLWC allows the City to have oversight of the program and ensure benefits for its constituents.

Why Are You Using The City/Utility Logo?

SLWC's partnership agreement with the City allows the company to use the logos in communications to indicate that there is a formal relationship in place and to let residents know that the offering is legitimate. All of the mailings SLWC sends to residents are first reviewed and approved by the City. All SLWC materials clearly state that the services the company offers are voluntary and that they are offered by SLWC, a private company that is separate from the City.

Can't This Company Just Market On Their Own?

Unfortunately, the participation from customers is much lower without the trust instilled by the City's brand. The City brand also conveys that the City is involved, overseeing the program, and choosing who will serve their residents best.

Do Residents Really Need This Coverage?

It is difficult to determine when a pipe may fail, with key contributors being the type of piping material, age of the service pipe, soil conditions and installation quality. Water line repairs can be costly–a replacement averages $2,500 nationally*–but the modest cost of an SLWC service plan is optional and up to the homeowner to decide based on their personal circumstances.

*Estimate based on national average repair costs within the SLWC network as of March 2018.

For more information, please visit **www.slwofc.ca**

Service Line Warranties of Canada

Service Line Warranty Program

External Service Lines, Out of Sight

Communities are always changing and evolving, and as infrastructure ages, service lines are frequently forgotten.

Many municipal staff and elected officials have heard concerns and complaints from residents who were not aware of their responsibility for the water and sewer lines on their private property and learn they are 'on the hook' for unexpected and potentially costly repairs when it's already too late.

Many standard homeowners policies do not provide coverage for these systems and, if they do, there is a deductible, risk of rising rates after a claim, the inconvenience of finding a contractor and a waiting period for a reimbursement.

41%

of homeowners are unaware of their responsibility for private service lines.*

Service Line Warranty Program

Exclusively through municipal partnerships, Service Line Warranties of Canada (SWLC) offers optional service plans to homeowners that help protect against the cost and inconvenience of unexpected repairs to the water and sewer lines on the private side of their property that connect to the municipal system.

Beyond offering residents financial peace of mind, our program takes away the burden of finding a contractor for an emergency repair, while driving business to a network of licensed and qualified local contractors.

93%

of respondents believe **the municipality should help educate homeowners** about their responsibilities related to a water or sewer line break on their property.*

* SLWC's 2022 State of the Canadian Home survey

How Does it Work?

Our partners benefit from an SLWC-funded awareness campaign to educate residents on their water and sewer service line responsibility and offer optional protection.

The collateral has the municipal logo to demonstrate that the offering is legitimate, is for the residents' benefit, and has the support of the municipality. All communications are reviewed and approved by the municipal staff.

If a homeowner decides a plan is right for them, enrollment is straightforward and accessible, with simple criteria, and no property inspection.

A homeowner who chooses to sign up for an SLWC plan receives the following benefits when making a claim:

- A repair hotline available 24/7/365
- Repairs performed by a licensed and insured local plumber
- A 1-year guarantee on materials and workmanship for all repairs

Our plans provide generous coverage sufficient for the vast majority of repairs. We maintain high standards of customer service and workmanship, through a variety of measures including a post-repair survey.

Cares Program

We are committed to putting people at the heart of everything we do, and that includes supporting those in need in the communities we service.

Our Cares Program offers qualifying low-income residents who are not enrolled in the program free repairs when they are faced with a service emergency.

Residents of your community who may be eligible for pro bono work can apply here.

Who Is Service Line Warranties of Canada?

SLWC is a subsidiary of HomeServe, a global home services company. We have offices in Toronto, the U.K., France, Spain, Japan and the U.S. The North American headquarters is in Norwalk, Connecticut, and the Canadian operations are managed locally in Ontario, with employees around the Greater Toronto area and Quebec.

In 2014, AMO-LAS invited us to offer our protection plans to homeowners through their members and since then we have **established partnerships with over 70 municipalities.**

Across North America, Service Line Warranties and its parent HomeServe work with **over 1,200 municipalities and utilities, serving 4.8 million customers.**

Service Line Warranties of Canada

servicelinewarranties.ca

Meet the Team

Mike Van Horne
General Manager

Mike brings over 20 years of experience driving record sales and market share growth across diverse business categories. He assumed the role of General Manager of HomeServe and Service Line Warranties of Canada in November 2020 and is responsible for business development, account management, operations and marketing.

Adam Moede
Manager, Partnerships

Adam handles account management, supporting our partners and continuing the success of the Service Line Warranty Program through a customer-first approach.

Madhav Gottumukkala
Senior Manager, Marketing

Madhav brings with him over 14 years of experience in diverse marketing functional roles in product marketing, trade marketing, brand building and leading impactful demand-generation campaigns in the Canadian market.

Morty Smolash
Senior Manager, Business Development

With over 30 years of sales and management experience in the technology and engineering markets, Morty has delivered multiple successful IT and Engineering/PLM projects to Canadian and U.S. organizations of all sizes, mostly in the aerospace, automotive, financial services and manufacturing sectors.

Elise Dostal
Senior Manager, Partnerships

Elise is responsible for account management nationally and continues carrying out our new partner acquisition strategy in Ontario as part of our original local business development team.

Daisy Peppler, *Senior Manager, National Operations*

With over 20 years of experience in marketing, sales and operations, Daisy has worked extensively with contractors in her roles at some of Canada's top service companies. Daisy is dedicated to building a successful operation, creating the best-in-class service customers come to expect from SLWC.

Jeffrey Olson, *Senior Director, Business Development*

Jeff has been in this role for the past 12 years and founded the SLWC business operations in Canada. He has spent the last 29 years working with both municipal and investor-owned utilities across the United States and Canada to improve performance and enhance services.

Contact Us

Elise Dostal
Senior Manager, Partnerships
Phone: 416-400-2022
Email: edostal@slwofc.ca

Adam Moede
Manager, Partnerships
Phone: 416-737-5563
Email: amoede@slwofc.ca

The Corporation of the Town of Tecumseh

Public Works & Engineering Services

To: Mayor and Members of Council

From: Phil Bartnik, Director Public Works & Engineering Services

Date to Council: April 11, 2023

Report Number: PWES-2023-31

Subject: Municipal Class Environmental Assessment
Notice of Amendment

Recommendations

It is recommended:

That Report PWES-2023-31 titled “Municipal Class Environmental Assessment – Notice of Amendment,” **be received**.

Executive Summary

The provincial government is streamlining and modernizing its environmental assessment process that ensures strong environmental oversight and reduces delays on projects that matter most to Ontario communities. This process included considering input from stakeholders and Indigenous communities on the proposed amendments to the Municipal Class Environmental Assessment in 2020.

Various changes were made to the Municipal Class Environmental Assessment to update project schedules to better align the level of assessment with the environmental impact of the project and to ensure important public services and infrastructure projects can get off the ground faster without unnecessary costs and delays.

Background

An Environmental Assessment (EA) is a formal process in which the Ontario Ministry of the Environment, Conservation and Parks (MECP) evaluates the environmental impact of a proposed project. The law ensures that the environmental impact of many large-scale activities is evaluated before the activities/undertakings are permitted. The EA process also informs the public about the project and gives interested parties the right to comment before the project is approved.

The Ontario MECP, under the Environmental Assessment Act (EAA), requires that an assessment be done for activities that are proposed by the province, a municipality or another public body. This includes activities such as building roads, hydro stations, and landfill sites.

Under the EAA, there are two processes for determining the impacts associated with projects:

1. Individual Environmental Assessments – prepared for large-scale, complex projects with the potential for significant environmental effects and require Ministry of the Environment, Conservation and Parks (MECP) approval.

2. Class Environmental Assessments – a document that sets out a standardized planning process for classes or groups of activities. It applies to projects that are carried out routinely and have predictable environmental effects that can be readily managed. There are Class EA processes for **municipal infrastructure projects**, provincial parks and conservation areas, waterpower projects, to name a few.

The Municipal Class Environmental Assessment (Municipal Class EA) document prepared by the Municipal Engineers Association sets out the procedure to be followed to plan municipal infrastructure projects, including roads, water, wastewater and transit projects, in a way that protects the environment. It is an approved process that municipalities must follow under the EAA.

The Municipal Class EA had classified projects into four categories:

- Schedule A projects that generally include normal or emergency operational and maintenance activities (i.e., maintenance of traffic control devices).

- Schedule A+ projects are similar to Schedule A projects, but the public must be advised prior to implementing A+ projects (i.e., multi-use trail construction within the road right-of-way).

- Schedule B projects that generally include improvements and minor expansions to existing facilities (i.e., watermain extension).

- Schedule C projects that generally include the construction of new facilities and major expansions to existing facilities (i.e., new wastewater treatment plant).

In 2020 the provincial government began modernizing its almost 50-year old EA program by working with proponents of Class EAs to propose changes that would align assessment requirements with environmental impact and reduce duplication and increase efficiency of the Class EA process while ensuring strong environmental oversight.

The ministry consulted on the proposed amendments with Indigenous communities, members of the public, government agencies and stakeholders.

Ontario Bill 197, the COVID-19 Economic Recovery Act, 2020 (Bill 197), made significant changes to the Class Environmental Assessment system. Bill 197 amended the Environmental Assessment Act (EAA) to enable the creation of new streamlined regulation with consistent and standardized processes.

Comments

On March 3, 2023, the MECP advised that the Municipal Class EA has been amended as part of the ministry work on EA modernization. The list of changes to the Municipal Class EA is extensive; the most significant amendments are summarized below.

Environmental Assessment Requirements

The Municipal Class EA has amended the environmental assessment requirements to better align with the potential environmental impacts of a project, reduce any duplication and improve clarity and consistency, including:

- making some projects eligible for exemption based on the results of an archaeological screening process (a more detailed discussion of this is provided later in the report).

- exempting projects that are needed because of an emergency.

- updating cost thresholds, consistent with provisions in the existing Municipal Class Environmental Assessment and the *Environmental Assessment Act.*

- exempting some transit projects that are already exempt through *O. Reg. 231/08* (Transit Projects and Metrolinx Undertakings) to ensure consistency.

Project Schedules

Various changes were made to the Municipal Class EA to update project schedules to better align the level of assessment with the environmental impact of the project.

In 2019, as part of the *More Homes, More Choice Act*, the EAA was amended to exempt Class A and A+ projects from Municipal Class EA requirements, because they were considered to be low-impact projects with minimal environmental effects. Meanwhile, Schedule B and C projects continued to follow the Class EA process.

In 2020, the Municipal Class EA was amended to classify more projects as Schedule A and A+ projects, meaning those projects would be pre-approved and do not need to follow the Class EA process. This affects a broad range of project types. For example, the installation, construction or reconstruction of traffic control devices has shifted from a Schedule C to Schedule A+ project. This is a substantial change because such projects no longer have to undergo the full planning and documentation procedures associated with Schedule C projects, including preparing and filing an Environmental Study Report for review by the public and review agencies. The stated reasoning behind this change is that such projects are typically located within existing rights-of-way and the potential for adverse impacts on the natural environment from this type of project is low.

Archaeological Screening Process

The amended Municipal Class EA now includes a provision for the protection of archaeological resources and burial sites. An archaeological screening process (ASP) is required for various projects to ensure archaeological resources are considered before a project proceeds.

The ASP consists of three questions with links to various tools and criteria under the *Ontario Heritage Act*. Proponents must carry out the specified research and consultation to accurately respond to each question. This includes, but is not limited to, consultation with Indigenous Communities, municipal governments, and the Ministry of Citizenship and Multiculturalism, and may require the assistance of a licensed archaeologist.

1. Does the project area include known or potential archaeological resources?

2. Based on the archaeological assessment(s), will the proposed project/undertaking have negative impacts (effects) to archaeological resources?

3. Based on the archaeological assessment(s), will any negative impacts (effects) be appropriately mitigated?

If a proponent does not fully and properly complete the archaeological screening process in accordance with the questions and the checklists/instructions referred to in

those questions or mischaracterizes their project or the impacts associated with the project, the proponent cannot proceed with their project and would be out of compliance with the EAA. A project is not exempt unless the archaeological screening process is completed as required, project documentation maintained and all mitigation measures that are identified through the screening process are implemented.

Bump up Requests

A significant change to the Municipal Class EA is the availability of “bump up” requests. These requests can require a project that has been subject to a Class EA to undergo an individual EA (formerly referred to as a “Part II Order”). **Under the new amendments to the EAA, such requests are only available “on the grounds that the order may prevent, mitigate or remedy adverse impacts on the existing aboriginal and treaty rights of the aboriginal peoples of Canada.”** Previously, the grounds for a bump up request were not limited in any way. Now, stakeholders who do not have concerns related to aboriginal and treaty rights can no longer make a bump up request.

Going Forward

In a letter dated March 3, 2023 (Attachment 1), the MECP advised the Municipal Engineers Association that proponents authorized to proceed with projects through the Municipal Class EA are required to proceed in accordance with the transition provisions set out in the amended Municipal Class EA (2023). The amended Municipal Class EA (2023) is provided in Attachment 2.

Projects/undertakings approved to proceed pursuant to Municipal Class EA are set out in tables together with their classification and are provided in Appendix 1 to the amended Municipal Class EA document. The projects are broken into three tables based on the type of infrastructure: roads, water and wastewater and transit. Projects are now classified into one of the following schedules:

1. Exempt from Environmental Assessment Act (EAA) requirements,
2. is eligible for exemption based on the results of the screening process(es) in Appendix 1;
3. should proceed through Schedule B or C despite being eligible for screening;
4. Schedule B, and
5. Schedule C.

The province has moved to this project-list approach for projects that would require a comprehensive environmental assessment (currently referred to as an individual environmental assessment) under the EAA. The province is advocating a streamlined

process to reduce timelines for these projects while continuing to provide opportunities for consultation and environmental oversight.

Consultations

Ministry of the Environment, Conservation and Parks

Financial Implications

This report is provided for information purposes only and does not have any financial implications.

Link to Strategic Priorities

Applicable	2019-22 Strategic Priorities
☐	Make the Town of Tecumseh an even better place to live, work and invest through a shared vision for our residents and newcomers.
☒	Ensure that Tecumseh's current and future growth is built upon the principles of sustainability and strategic decision-making.
☐	Integrate the principles of health and wellness into all of Tecumseh's plans and priorities.
☒	Steward the Town's "continuous improvement" approach to municipal service delivery to residents and businesses.
☐	Demonstrate the Town's leadership role in the community by promoting good governance and community engagement, by bringing together organizations serving the Town and the region to pursue common goals.

Communications

Not applicable ☒

Website ☐ Social Media ☐ News Release ☐ Local Newspaper ☐

This report has been reviewed by Senior Administration as indicated below and recommended for submission by the Chief Administrative Officer.

Prepared by:

Cheryl Curran, BES
Project Technician

Reviewed by:

Phil Bartnik, P.Eng.
Director Public Works & Engineering Services

Recommended by:

Margaret Misek-Evans, MCIP, RPP
Chief Administrative Officer

Attachment Number	**Attachment Name**
1	Municipal Class Environmental Assessment Amendments – Stakeholder letter dated March 3, 2023
2	Municipal Class Environmental Assessment, Municipal Engineers Association, March 2023

Ministry of the Environment, Conservation and Parks

Environmental Assessment Modernization Branch

135 St. Clair Avenue West
4th Floor
Toronto ON M4V 1P5

Ministère de l'Environnement, de la Protection de la nature et des Parcs

Direction de la modernisation des processus d'évaluation environnementale

135, avenue St. Clair Ouest
4e étage
Toronto ON M4V 1P5

Ontario

March 3, 2023

Good morning/afternoon,

Ontario is taking action to streamline and modernize its almost 50-year-old environmental assessment process that is too slow, unnecessarily burdensome and costly, to build Ontario while continuing to protect the environment. As part of this plan, we are making practical changes that would ensure strong environmental oversight while reducing delays to get shovels in the ground on projects that matter most to Ontario communities.

Today, on behalf of the Ministry of the Environment, Conservation and Parks, I am writing to let you know that the Municipal Class Environmental Assessment (EA) has been amended as part of the ministry's work on EA modernization.

Over the last three years, our modernization efforts have focused on ensuring strong environmental oversight while reducing delays on infrastructure projects that matter most to Ontario communities. This process includes considering input from stakeholders and Indigenous communities and streamlining requirements for low-risk municipal infrastructure projects, while maintaining strong environmental oversight and protection.

In 2019, the Ministry of the Environment, Conservation and Parks invited the proponents of class environmental assessments to review their assessment process and to propose changes to reduce duplication and better align assessment requirements with risk. We started consulting with municipalities, government agencies and Indigenous communities on the proposed amendments to the Municipal Class EA in 2020. I want to thank all who have offered feedback on the proposed amendments, through submitting comments, participating in webinars and correspondence. We have considered all comments received during the consultation, in addition to conducting our own analysis before the minister decided on the proposed amendments to the Municipal Class EA.

After careful consideration, the decision was made to approve many of the proposed amendments to the Municipal Class EA, including amendments proposed by the ministry. Various changes were made to the Municipal Class EA to update project schedules to better align the level of assessment with the environmental impact of the project. By looking at smarter, more modern ways of doing business, we're making sure important public services and infrastructure projects can get off the ground faster without unnecessary costs and delays.

Based on input received from Indigenous communities and Ministry of Citizenship and Multiculturalism (formerly the Ministry of Tourism, Culture and Sport) regarding the need to ensure the protection of archaeological resources and burial sites, an archaeological screening process will be required for various project types that are now eligible for exemption. The exemption will be conditional on the completion and outcome of the screening. The archaeological screening process consists of three questions with links to various tools and criteria developed under the *Ontario Heritage Act*. Proponents must carry out the specified research and consultation to accurately respond to each question, including consultation with Indigenous Communities, municipal governments, and Ministry of Citizenship and Multiculturalism, and may require the assistance of a licensed archaeologist. A project that the screening process applies to would not be exempt unless the archaeological screening process is completed as required, project documentation maintained and all mitigation measures that are identified through the screening process are implemented.

Please see Appendix 1 of the Municipal Class EA for more information on the new archaeological screening process.

Detailed information on the approved amendments to the Municipal Class EA, including the Minister of the Environment, Conservation and Parks' reasons for making the amendments, can be found at: https://ero.ontario.ca/notice/019-5069. The changes are effective as of the date of posting on the Environmental Registry of Ontario, March 3, 2023.

Proponents authorized to proceed with projects through the Municipal Class EA are required to proceed in accordance with the transition provisions set out in the amended Municipal Class EA, as it came into effect on March 3, 2023. Municipalities should review the amended Municipal Class EA to determine the impact on their project.

If you have any questions, please contact Stephen Deneault, Project Officer, by e-mail at: Stephen.Deneault@ontario.ca and the Environmental Assessment Modernization Team at: EAModernization.MECP@ontario.ca.

Sincerely,

Annamaria Cross
Director, Environmental Assessment Modernization Branch
Ministry of the Environment, Conservation and Parks

MUNICIPAL CLASS ENVIRONMENTAL ASSESSMENT

Municipal Engineers Association

March 2023

Foreward

This document is the Municipal Class Environmental Assessment (2023). It incorporates all approved amendments to the Municipal Class Environment.

Previous editions were published in 2000, 2007, 2011 and 2015.

Further questions or clarifications regarding the Municipal Class Environmental Assessment can also be requested be emailing admin@municipalengineers.on.ca.

Table of Contents

Executive Summary

Introduction

In 1987, the first class environmental assessments (Class EAs) for municipal road, water, and wastewater projects, prepared by the Municipal Engineers Association on behalf of Ontario municipalities, were approved under Ontario's *Environmental Assessment Act*. In 1993, these Class EAs were reviewed, updated and their approval extended.

In 2000, the Class EAs for municipal road, water and wastewater projects were all consolidated into a single Class EA; the Municipal Class Environmental Assessment (MCEA), updated, and approved under Part II.1 of the amended Ontario EAA by Order-in-Council on October 4, 2000. Since many municipalities and stakeholders indicated the process was working well, and, recognizing that much had been achieved over the years of working with and refining the Class EAs, and subsequently the MCEA, the main guiding principle was to maintain the substance of the existing process and updating as necessary.

Since 2000, MEA has proposed a number of amendments to the MCEA. The major amendments are summarized below:

- 2007 Amendment to create Schedule A+ and to create a section for Transit.
- 2011 Amendment to revise Section A.2.9 *Integration with the Planning Act*
- 2015 Amendment to the Roads section of Appendix 1 to include Active Transportation Facilities
- 2023 Amendment to Appendix 1 and other various sections as described in A.1.6

Description Of The Class Of Undertakings

The municipal road, water, wastewater, and transit undertakings set out in Appendix 1 of this document may proceed pursuant to this Class Environmental Assessment. Since undertakings carried out by municipalities can vary in their environmental impact, the undertakings are classified as exempt, eligible for screening, B, and C within the MCEA with each classification having different requirements.

Exempt Projects

These projects, most of which were formerly classified as Schedule A and A+ projects, include various municipal maintenance, operational activities, rehabilitation works, minor reconstruction or replacement of existing facilities, and new facilities that are limited in scale and have minimal adverse effects on the environment. These projects are exempt from the requirements of the *Environmental Assessment Act*.

Eligible for Screening to Exempt

Some projects may be eligible for exemption based on the results of a screening process. Proponents may choose to complete the applicable screening process to determine whether their project is eligible for exemption from the EAA or proceed with the applicable Schedule B or C process. Projects that are eligible for screening are identified in column 2 of the tables in Appendix 1. Proponents must fully and accurately complete the relevant screening process(es) outlined in Appendix 1 to proceed pursuant to the exemption.

Schedule B
These projects have the potential for some adverse environmental effects. The proponent is required to undertake the first two phases of the assessment process, involving mandatory contact with directly affected public and relevant review agencies, to ensure that they are aware of the project and that their concerns are identified and considered. A Project File must be prepared and made available for review by any interested person or party. If there are no outstanding concerns, then the proponent may proceed to implementation once the regulatory process has been completed. Schedule B projects generally include improvements and minor expansions to existing facilities or smaller new projects.

Schedule C
These projects have the potential for more significant environmental effects than a Schedule B project and as such a proponent is required to complete the full planning and documentation process set out in the MCEA. For Schedule C projects, proponents are required to prepare an Environmental Study Report for review by the public and review agencies. If there are no outstanding concerns, the proponent may proceed to implementation once the regulatory process has been completed. Schedule C projects generally include the construction of new facilities and major expansions to existing facilities.

Proponents should refer to the table in Appendix 1 for those undertakings that can proceed pursuant to the MCEA and their categorization.

Reasons For Using A Class Environmental Assessment With Respect To Undertakings In The Class

The MCEA enables the planning and implementation of municipal infrastructure to be undertaken in accordance with an approved procedure designed to protect the environment. The MCEA process has been proven to be an effective way of complying with the EAA through thirty years of experience. It provides:

- a reasonable mechanism for proponents to fulfill their responsibilities to the public for the provision of municipal services in an efficient, timely, economic, and environmentally responsible manner;
- a consistent, streamlined and easily understood process for planning and implementing infrastructure projects; and,
- the flexibility to tailor the planning process to a specific project taking into account the environmental setting, local public interests, and unique project requirements.

Municipalities undertake hundreds of infrastructure projects. The MCEA process provides a decision-making framework that enables the requirements of the EAA to be met in an effective manner. Without the MCEA, each municipality would be required to either undertake an individual EA for all municipal projects; develop their own Class EA process; and/or, obtain individual exemptions for each undertaking. These alternatives would be extremely onerous, time consuming and costly. Three decades of experience have

demonstrated that considerable public, economic and environmental benefits are achieved by having municipal infrastructure projects proceed pursuant to a Class EA process.

Similarities And Differences To Be Expected Among Undertakings In The Class

The undertakings that can proceed through the MCEA process are municipal infrastructure projects (roads, water, wastewater, and transit). Accordingly, they share the following similarities:

- they generally address similar types of problems and opportunities;
- a common set of “alternatives to” and “alternative methods” apply;
- they follow the same EA planning process with similar phases; and
- the types of impacts and approaches to environmental protection and mitigation are recurrent.

Given that there are over 440 municipalities, within Ontario, with a variety of environmental settings, the main expected differences between the undertakings are:

- project-specific problems and opportunities;
- project-specific environmental and community issues;
- project-specific solutions; and
- varying levels of project complexity or sensitivity

The MCEA defines the minimum requirements that a proponent must follow to proceed with the undertaking pursuant to the MCEA. There are potential differences amongst undertakings within the province, therefore, the framework is flexible so that proponents may “customize” it to address the specific complexities and needs of a project, including potential environmental effects.

Expected Range Of Environmental Effects

The geographic setting for projects proceeding pursuant to the MCEA will vary widely throughout Ontario. For the purposes of environmental analysis, however, geographic settings can be broadly categorized as urban and rural areas. Potential environmental effects are discussed in Sections B.3, C.3, and D.3, and Appendix 2.

Potential Mitigating Measures

Appendix 2 describes typical measures that could be taken to mitigate adverse environmental effects that may result from undertakings proceeding pursuant to the MCEA.

With the wide diversity of geographic settings and environmental conditions in which municipal infrastructure projects may be carried out throughout Ontario, it is not possible to identify specific mitigating measures which can be applied in all instances. Proponents of undertakings proceeding pursuant to the MCEA are required to identify acceptable measures which will allow the project to be undertaken at reasonable cost while at the same time protecting the environment against net negative environmental effects. The MCEA also requires proponents to make provision for post-construction monitoring to ensure that

projects are built and operated in accordance with the approved design and that environmental effects are as predicted.

Process to Consult with the Public and Those Who May Be Affected by the Undertaking

Consultation early in, and during, the planning process is a key feature of successful EA program. The MCEA identifies mandatory consultation requirements. These are a minimum only and proponents must tailor the consultation program to address the needs of a specific project and its stakeholders. Consultation with municipal councils, review agencies, the public, interest groups and property owners is discussed in Section A.3 and Appendix 5.

Method To Evaluate A Proposed Undertaking

The framework for evaluating undertakings is outlined in the description of the EA planning process in Sections A.1 and A.2 of the MCEA. The key elements are:

- consideration of the effects of each alternative on all aspects of the environment;
- systematic evaluation;
- traceable decision-making; and
- public and review agency input in the evaluation.

Method To Be Used To Determine The Final Design Of A Proposed Undertaking

Section A.2.4 describes the process to determine the preferred design concept. Finalization of the detailed design occurs during Phase 5 after the Project File Report or Environmental Study Report has been reviewed by the public and technical agencies. It is imperative that the commitments and decisions made during the process be clearly documented in the Project File Report or Environmental Study Report and implemented during Phase 5.

Glossary of Terms

Note: Definitions for “Municipal Transit” and key transit terms are provided in Sections D.1.2 and D.1.3 respectively.

For further information on the meaning of natural and cultural heritage features, proponents should review information provided in Municipal Official Plans, Provincial Policy Statements or other documents published by, on information on the websites of Conservation Authorities, the Ministry of Northern Development (MND), Ministry of Mines, Ministry of Natural Resources and Forestry (MNRF), Ministry of the Environment, Conservation and Parks (MECP), Ministry of Agriculture, Food and Rural Affairs (OMAFRA), and the Ministry of Citizenship and Multiculturalism (MCM) (formerly the Ministry of Tourism, Culture and Sport).

ACTIVE TRANSPORTATION FACILITY
A facility used exclusively by persons using their own power to get from one place to another. This includes walking/running, cycling, skateboarding, snowshoeing/skiing, wheel chairing

ALTERNATIVE SOLUTIONS
Means feasible alternative ways of solving an identified problem (deficiency) or addressing an opportunity from which a preferred solution is selected. Note: alternative solutions include the “Do Nothing” alternative.

ALTERNATIVE DESIGN
Means alternative ways of designing or carrying out the preferred solution.

ARCHAEOLOGICAL RESOURCES
includes artifacts, archaeological sites and marine archaeological sites, as defined under the *Ontario Heritage Act*. The identification and evaluation of such resources are based upon archaeological fieldwork undertaken in accordance with the *Ontario Heritage Act.*

ARCHAEOLOGICAL SCREENING PROCESS
Means the archaeological screening process set out in Appendix 1. For those undertakings identified in the tables in Appendix 1 as eligible for screening, the proponent must complete the screening process to determine whether the undertaking can proceed without further requirements under the EAA or whether a Schedule B or C process is required to be completed.

AREAS OF ARCHAEOLOGICAL POTENTIAL
Means areas with the likelihood to contain archaeological resources. Criteria to identify archaeological potential are established by the Province. The *Ontario Heritage Act* requires archaeological potential to be confirmed by a licensed archaeologist.

BRIDGE
Means a structure that provides a roadway or walkway for the passage of vehicles, pedestrians, cyclists across an obstruction, gap or facility and that is greater than 3 metres in span. (CSA-S6-00).

BRIDGE CAPACITY
Means the number of through travel lanes for vehicles on the bridge. Adjusting lane width to current standards that do not increase the number of travel lanes and cycling, parking or turning lanes are not through travel lanes. Increasing the width of a narrow bridge (one lane with two way traffic) to the current standard to accommodate two way traffic (two lane) is not considered an increase in capacity.

BUILT HERITAGE RESOURCES
means a building, structure, monument, installation or any manufactured or constructed part or remnant that contributes to a property's cultural heritage value or interest as identified by a community, including an Indigenous Community. Built heritage resources are located on property that may be designated under Parts IV or V of the *Ontario Heritage Act,* or that may be included on local, provincial, federal and/or international registers.

CLASS ENVIRONMENTAL ASSESSMENT (CLASS EA)
Means the Class EA that was approved under the EAA, and which sets out the undertakings to which the approval applies and the applicable planning process for those undertakings. It was historically referred to as the "parent" document. A Class EA is usually approved for routine undertakings that have predictable environmental effects that can be readily managed.

COLLECTOR ROAD SCREENING PROCESS
Means the collector road screening process set out in Appendix 1. For those undertakings identified in the tables in Appendix 1 as eligible for screening, the proponent must complete the screening process to determine whether the undertaking can proceed without further requirements under the EAA or whether a Schedule B or C process is required to be completed.

COMMUNAL SEWAGE SYSTEM
Means facilities requiring approval under Section 53 of the *Ontario Water Resources Act*. Shared facilities for the collection, treatment and disposal of sewage using subsurface effluent disposal. Communal sewage systems are physically separate from and not connected to full municipal services, are generally small to moderate size, and are often constructed by a private developer for residential purposes (including seasonal) but may also be for institutional, commercial or industrial uses.

COST
Means the most up-to-date estimate prepared by the proponent of the cost of a project, and which has been accepted by the proponent as the basis on which the project is to proceed. The estimate shall <u>not</u> include costs for:

i. acquisition of land;
ii. feasibility studies and engineering design for the project; and
iii. operation of the project.

The estimate shall include the capital costs of all components of a project required to solve the problem. If separate components of a project are independent of each other (i.e., are solving separate problems) but are being constructed together as a single project for purposes of cost effectiveness or efficiency (e.g., a defective watermain replaced while a road is being reconstructed), then the costs shall be considered to be separate. Costs thresholds are used in the Municipal Road Projects Table.

CULTURAL HERITAGE LANDSCAPE
means a defined geographical area that may have been modified by human activity and is identified as having cultural heritage value or interest by a community, including an Indigenous Community. The area may include features such as buildings, structures, spaces, views, archaeological sites or natural elements that are valued together for their interrelationship, meaning or association. Cultural heritage landscapes may be properties that have been determined to have cultural heritage value or interest under *the Ontario Heritage Act*, or have been included on federal and/or international registers, and/or protected through official plan, zoning by-law, or other land use planning mechanisms.

CULTURAL HERITAGE RESOURCES
include built heritage, cultural heritage landscapes, and marine and other archaeological sites. The Minister of Citizenship and Multiculturalism (MCM) is responsible for the administration of the *Ontario Heritage Act* and is responsible for determining policies, priorities and programs for the conservation, protection and preservation of Ontario's heritage, which includes cultural heritage landscapes, built heritage and archaeological resources. MCM has released a series of resource guides on the *Ontario Heritage Act,* entitled the Ontario Heritage Tool Kit.

CULVERT
Means a structure that forms an opening through soil. (CSA-S6-00)

ENVIRONMENT
means:
a) air, land, or water,
b) plant and animal life, including human life
c) the social, economic, and cultural conditions that influence the life of humans, or a community,
d) any building, structure, machine or other device or thing made by humans,
e) any solid, liquid, gas, odour, heat, sound, vibration, or radiation resulting directly or indirectly from human activities, or
f) any part or combination of the foregoing and the interrelationships between any two or more of them,

in or of Ontario.

ENVIRONMENTAL ASSESSMENT ACT or EAA
Means Ontario's *Environmental Assessment Act.*

ENVIRONMENTAL COMPLIANCE APPROVAL
Has the same meaning as in Ontario's *Environmental Protection Act*, and includes an approval issued under Part II.1 of the *Environmental Protection Act* and includes a certificate of approval or provisional certificate of approval or an approval granted under section 53 of the *Ontario Water Resources Act* prior to section 2.1 of the *Environmental Protection Act* coming into force.

ENVIRONMENTALLY SENSITIVE NATURAL AREA (See Roads, Water and Wastewater Tables)
Means any of the following:

- An area reserved or set apart as a provincial park or conservation reserve under the *Provincial Parks and Conservation Reserves Act, 2006*
- An area set apart as a wilderness area under the *Wilderness Areas Act*
- An area designated by a municipality in its official plan as environmentally significant, however expressed, including designations of areas as environmentally sensitive, as being of environmental concern and as being ecologically significant
- An area designated as an escarpment natural area or an escarpment protection area by the Niagara Escarpment Plan under the *Niagara Escarpment Planning and Development Act*
- A property within an area designated as a natural core area or natural linkage area within the area to which the Oak Ridges Moraine Conservation Plan under the *Oak Ridges Moraine Conservation Act, 2001* applies
- A hazardous site where property or lands could be unsafe for development and site alteration due to naturally occurring hazards; such as, unstable soils (sensitive marine clays, organic soils) or unstable bedrock
- An area identified as a key hydrologic area, such as; significant groundwater recharge areas, highly vulnerable aquifers, and significant surface water contribution areas that are necessary for the ecological and hydrologic integrity of a watershed.
- An area identified as having key hydrological features, such as; permanent and intermittent streams, inland lands and their littoral zones, seepage areas and springs, and wetlands.
- An area identified as having key natural heritage features such as; habitat of endangered species and threatened species; fish habitat; wetlands; life science areas of natural and scientific interest (ANSIs), significant valleylands, significant woodlands; significant wildlife habitat (including habitat of special concern species); sand barrens, savannahs, and tallgrass prairies; and alvars.

ENVIRONMENTAL STUDY REPORT
Means the documentation for a specific project planned in accordance with the procedures for Schedule C projects, setting out the planning and decision-making process, including consultation practices, which has been followed to arrive at the preferred solution. The Environmental Study Report also sets out the mitigating measures proposed to avoid or minimize environmental impacts.

EXEMPT PROJECT
Means an undertaking which is exempt from the EAA.

EXISTING MUNICIPAL WELLSITE
Means the site of an existing operating municipal well, or a site for which a municipal well has received all necessary approvals including the Drinking Water Works Permit under the *Safe Drinking Water Act, 2002*. “Site" refers to the ground surface on which the well is located, not the aquifer, and may be either municipally owned, or land owned by others over which the municipality has an easement. If there is doubt as to whether a proposed well falls within or outside an existing well site, advice should be sought from the ministry’s District Office.

EXISTING RATED CAPACITY
Means the flow or volume capacity of the overall sewage or water system, as stated on the Environmental Compliance Approval. In cases where this is not specified on the Environmental Compliance Approval, the existing rated capacity is as indicated in the plans and specifications that were submitted to obtain the approval. Where none of the above exists, then it is the current existing capacity as established by the documented records.

EXISTING RATED YIELD
Means the flow or volume yield of the water supply from a municipal well site, as indicated on the Permit to Take Water or as indicated in the plans and specifications submitted to obtain a Drinking Water Works Permit or Municipal Drinking Water Licence, or, where no technical documentation exists, is the current existing yield as established by documented pumping records.

EXISTING ROAD
Means a road being used to carry vehicular traffic for at least three seasons of the year.

EXISTING SEWAGE OR WATER SYSTEM
Means an existing sewage or water facility, or a series of such facilities making up a system, which is in existence and has received all necessary approvals including an Environmental Compliance Approval or a Drinking Water Works Permit or Municipal Drinking Water Licence, and includes those systems established prior to the legislative requirement to receive such approvals.

EXPANSION (Applies to Water and Wastewater Projects)
Means activities undertaken in an existing sewage, stormwater management or water system, which do not meet the definition of "Operation" and will physically enlarge that system or expand the hydraulic or treatment capacity of that system.

FEDERAL AUTHORITY
Means a federal Minister of the Crown; an agency or other body of the federal government ultimately accountable to Parliament through a federal Minister of the Crown; any federal department or departmental considerations set out in Schedule I or II to the Financial Administration Act; and any other body prescribed by the Canadian Impact Assessment Act's regulations.

FLOOD PLAIN
for river, stream and inland lake systems, means the area, usually low lands adjoining a watercourse, which has been or may be subject to flooding hazards.

GRADE SEPARATION
Means a crossing of a railway and a road at different levels or a crossing of two roads at different levels without interconnecting ramps.

HIGH OCCUPANCY VEHICLE (HOV)
Means a bus or motor vehicle containing the specified minimum number of persons prescribed by local by-laws.

IMPACT ASSESSMENT ACT
Means Canada's *Impact Assessment Act*.

INDIVIDUAL ENVIRONMENTAL ASSESSMENT OR INDIVIDUAL EA
Means the application required to be submitted pursuant to section 5 of the EAA for *a decision* by the Minister which is required to be approved by Lieutenant Governor in Council (Cabinet). An EA is a study which considers the potential effects of a proposal on the environment. Key components include consultation, consideration of alternatives, and evaluation, assessment and management of potential environmental effects.

INTERCHANGE
Means a crossing of two roadways at different levels with connecting ramps for traffic travelling between the intersecting roadways.

INTERMITTENT WATER COURSE
Means a watercourse which has no measurable flow at some times of the year.

LINEAR PAVED FACILITIES
Means facilities which utilize a linear paved surface including road lanes, or High Occupancy Vehicle (HOV) lanes.

LOCALIZED OPERATIONAL IMPROVEMENT
Refers to structural changes to an existing roadway at specific locations, and may include turning lanes at an intersection, storage lanes, U-turn lanes, bus bays, median changes, changing the curb radii, etc.

LOW IMPACT DEVELOPMENT (LID)
Means a stormwater management strategy that seeks to mitigate the impacts of increased runoff and stormwater pollution by managing runoff as close to its source as possible. LID comprises a set of site design strategies that minimize runoff and distributed, small scale structural practices that mimic natural or predevelopment hydrology through the processes of infiltration, evapotranspiration, harvesting, filtration and detention of stormwater.

MASTER PLAN
Means a long-range plan which integrates infrastructure requirements for existing and future land use. The Master Planning process must follow, at a minimum, the same steps of the first two phases of the MCEA process.

MINIMUM MUNICIPAL STANDARD – CULVERT
Means the minimum culvert size which the municipality requires for new installations across the municipality's roads.

MINIMUM MUNICIPAL STANDARD - ROAD SURFACE
Means the municipality's lowest standard travelled width (where one exists) for the road being considered. In the absence of a Municipal Standard, the Geometric Design Standards for Ontario Highways may be adopted.

MINISTER
Means Ontario's Minister of the Environment, Conservation and Parks or such other member of the Executive Council as may be assigned responsibility for the *Environmental Assessment Act.*

MINISTRY
Means the ministry of the Minister.

MUNICIPAL CLASS ENVIRONMENTAL ASSESSMENT or MCEA
Means this document, as approved and amended from time to time pursuant to the EAA, establishing the process for a class or group of municipal road, water, wastewater, and transit undertakings to proceed pursuant to the EAA. Undertakings included in the class of undertakings that may proceed pursuant to this approval may proceed provided the proponent complies with the requirements of this approval and the EAA.

MUNICIPAL ENGINEERS ASSOCIATION (MEA)
The MEA is a non-profit organization representing the interests of over 950 professional engineers employed by Ontario Municipalities, Provincial Agencies, Conservation Authorities or by Consulting firms who are designated by a municipality as their engineer-of-record.

MUNICIPAL TRANSIT
Means public transportation services undertaken by a municipality for travel within a municipality or a region

NET ENVIRONMENTAL EFFECTS
Means the impacts, both positive and negative, of an alternative, which remain after mitigation measures have been applied.

NEW SEWAGE OR WATER SYSTEM
Means a new sewage or water facility, or series of facilities, having no physical connection with an existing sewage or water facility through property or process link.

NEW ROAD
Means the construction of an improved surface for vehicular traffic on a new right-of-way where the right-of-way is entirely separate from any previous right-of-way. Also refers to construction of a road on a road allowance where no road surface previously existed.

OPERATION
Means use, maintenance, repair, and management of a municipal facility where the purpose, use, capacity and location remain the same.

Same purpose, use, capacity and location refers to the replacement or upgrading of a structure or facility or its performance, where the objective and application remain unchanged, and the volume, size and capability do not exceed the minimum municipal standard (defined above), or the existing rated capacity (defined above), and there is no substantial change in location

Example a) a change from rural to urban cross section for a roadway is considered to be for the “same purpose, use and capacity” if the reconstructed cross section has the same number of lanes and is essentially in the same location. Works carried out within an existing road allowance such that no land acquisition is required are considered to be in the same location.

Example b) a treatment plant system which was approved under the *Ontario Water Resources Act* to operate at 30,000 cubic metres per day (m^3/d) but which was only constructed to operate at 20,000 m^3/d, can be expanded by up to 10,000 m^3/d, at its existing site, and that expansion would qualify as an Operations activity.

The use of this definition when determining the appropriate Schedule (see Appendix 1) will require sound professional judgement through the scoping of issues and potential impacts.

PIECEMEALING
Refers to breaking up a larger project into smaller component parts to reduce environmental assessment requirements. It is inappropriate for proponents to piecemeal their projects.

PLANNING ACT
Means Ontario’s *Planning Act*.

PROJECT
Has the same meaning as undertaking for the purposes of the MCEA. A project may consist of one or more activities to solve a specific problem or address an opportunity.

PROPONENT
Means a person who,
(a) carries out or proposes to carry out an undertaking; or
(b) is the owner or person having charge, management or control of an undertaking.

Refer to section A.1.3 (Proponency) for information on the proponents that may proceed with an undertaking through the MCEA.

PROVINCIAL HIGHWAY
Means roadways under the jurisdiction of the Ontario Ministry of Transportation including King's highways, secondary highways and tertiary roads, including all components within the associated right-of-way.

PUBLIC
Means the general public, individual members of the public who may be affected by or have an interest in a project and special interest groups

PUBLISHED NOTICE
Means a notice published in a local newspaper having general circulation in the area of the project or published in accordance with the municipality's established procedure.

RE-ALIGNMENT
Means adjusting the centerline of linear infrastructure either horizontally and/or vertically

RESPONSIBLE AUTHORITY or RA
Means a federal authority that is required pursuant to sub-section 11 (1) of Canada's *Impact Assessment Act* to ensure that a federal environmental assessment of a project is conducted.

RETIREMENT
Means the taking out of operation, abandonment, removal, demolition or disposal of a road, bridge, sewage, stormwater management or water facility for which approval under the EAA would have been necessary for its establishment and includes sale, lease, or other transfer of the facility for purposes of taking out of operation, abandonment, removal, demolition or disposal.

REVIEW AGENCIES
Means government agencies, ministries or public authorities or bodies whose mandates require them to have jurisdiction over matters affected or potentially affected by projects planned under the MCEA. This includes municipalities other than the proponent.

ROAD ALLOWANCE
Means a surveyed allowance of land for roadway purposes. A road allowance can be either "opened" with an existing road surface or "unopened" in which case no travelled surface is provided.

In this document, "allowance existing road allowance" means an existing opened road with an existing road surface, or road right-of-way. It does not include an unopened or shore road allowance.

ROAD CAPACITY
Means capacity defined in terms of travelled lanes and does not differentiate between various lane widths to accommodate differing volumes of traffic.

ROAD WIDENING
Means increasing the number of lanes of an existing road and may include the widening of the right-of-way but does not include localized operational improvements.

ROADS

Arterial Roads:
Means roads which move moderate to high traffic volumes over moderate distances within a municipality between principal areas of traffic generation and which gather traffic from collector roads and local roads and move it to the Provincial highway system; arterial roads are generally designed for medium speed, have capacity for 2 – 6 lanes, may be divided, with limited or controlled direct access from adjacent developments and with on-street parking discouraged.

Collector Roads
Means roads which move low to moderate traffic volumes within specific areas of a municipality and collect local traffic for distribution to the arterial or Provincial highway system; collector roads are generally designed for medium speed, have capacity for 2 – 4 lanes, are usually undivided, with direct access from adjacent development permitted but usually controlled, and with controlled on-street parking usually permitted.

Local Roads
Means roads which provide for low volumes of traffic and access to private properties; local roads are designed for low speeds, have capacity for 2 undivided lanes of traffic; through traffic is discouraged and parking is usually permitted though often controlled.

SAME PURPOSE, USE, CAPACITY AND LOCATION
See Operation

SAME PURPOSE, USE AND LOCATION (TRANSIT PROJECTS)
See Section D.1.3.1.

SECONDARY PLAN
Means a development or other plan for a specific area within a municipality adopted and municipality-approved or which came into effect under the Planning Act as an Amendment to the Official Plan.

SECTION 16 ORDER
Means an order issued by the Minister (or the Minister's delegate) pursuant to section 16 of the EAA. Formerly referred to as a Part II order or "bump up" request.

SEWAGE
Includes sanitary sewage, drainage, storm water, commercial wastes and industrial wastes.

SEWAGE COLLECTION SYSTEM
Means service branches, trunk and local sewers, pumping stations, and appurtenances which include catch basins, inlet control devices, leads, manholes and outfalls, all for purposes of conveying sewage, but does not include sewage treatment facilities, sewage retention/detention tanks/ ponds or their respective outfalls. For further description of sanitary sewage projects, see Section C.2.2; for further description of storm sewage and stormwater management projects, see Section C.2.3.

STORMWATER MANAGEMENT
Means the management of stormwater run-off and may include:

- the collection and transport of stormwater run-off, e.g., storm sewers; facilities which attenuate the hydrograph and detain stormwater runoff, e.g., detention/retention, infiltration
- facilities and means to treat and address the quality of stormwater run-off
- water management facilities which minimize impacts of wave action, flooding, erosion and bank and valley wall instabilities
- facilities which affect fisheries, such as fish ladders, wetlands operation and maintenance of the above.

Within a stormwater management system:

- Passive biological treatment systems are unoperated systems that contain naturally occurring chemical/biological reactions.
- Active chemical or biological treatment or disinfection systems are operator-controlled or maintained systems that tend to have mechanical components included.

STORMWATER MANAGEMENT PLAN
Establishes the selection of Best Management Practices, the specifics for design of control facilities and the details of protection measures and/or enhancement of rehabilitation programs to meet the objectives set by the Watershed and Subwatershed Plans.

SUBJECT TO *PLANNING ACT* REQUIREMENTS
Means that the project must conform to the normal standards established in the zoning by-law, such as setbacks, buffering, grading, drainage and stormwater management, parking, traffic flow etc. that are appropriate and apply to the project.

UNDERTAKING
Means:
(a) an enterprise or activity or a proposal, plan or program in respect of an enterprise or activity by or on behalf of Her Majesty in right of Ontario, by a public body or public bodies or by a municipality or municipalities, or

(b) a major commercial or business enterprise or activity or a proposal, plan or program in respect of a major commercial or business enterprise or activity of a person or persons other than a person or persons referred to in clause (1) that is designated by the regulations, or

(c) an enterprise or activity or a proposal, plan or program in respect of an enterprise or activity of a person or persons, other than a person or persons referred to in clause (a), if an agreement is entered into under section 3.0.1 in respect of the enterprise, activity, proposal, plan or program.

Undertaking can refer to a single project or group of projects the proponent intends to proceed with pursuant to the MCEA.

UPGRADING: (Water and Wastewater Projects)
Means additions to or replacement of existing equipment or facilities or changes in management practices, which are intended to achieve a higher level or improved quality of system performance or are intended to bring equipment or facilities up to current standards, while not increasing system capacity.

UTILITY CORRIDOR
Means land or rights to land utilized for locating utilities, including sewage, stormwater management and/or water services and/or appurtenances thereto, railways, streetcars, light rapid rail systems and transit ways.

In this document, “existing utility corridor” means a developed utility corridor.

WASTEWATER
Has the same meaning as sewage.

WATERCOURSE
Means flowing water, though not necessarily continuous, within a defined channel and with a bed and banks which usually discharges itself into some other watercourse or body of water.

Note: For all water crossings, proponents shall contact the local MNRF Office and the Conservation Authority as a minimum.

WATER CROSSING or WATERCOURSE CROSSING (ROADS)
Means a culvert, bridge (see definition), tunnel, causeway, ferry or other facility or structure carrying a roadway or linear paved facility which crosses a naturally occurring water body or

surface drainage feature such as a lake, swamp, marsh, bay, river, creek, stream or man-made drainage facility such as a ditch, canal or municipal drain. As numerous variations in design are possible, the following distinguishing features will be used to differentiate between culverts, bridges and causeways

1. Culverts are usually covered by fill material.
2. Bridges consist of a deck supported by abutments and possibly piers.
3. Causeways are embankments of fill material constructed across bodies of water or wetlands and may include culverts and/or bridges.

WATERCOURSE CROSSING (WATER AND WASTEWATER)
Means a sewage, stormwater management or water facility or a component thereof, which crosses over, under or through a naturally occurring water body or surface drainage feature such as a lake, swamp, marsh, bay, river, creek, stream or man-made drainage facility such as a ditch, canal or municipal drain.

WATER DISTRIBUTION SYSTEM
Means service connections, trunk and local distribution mains, trunk supply mains connecting source to treatment facilities, pressure reduction stations, pumping stations, and appurtenances which include hydrants, valves and chambers, but does not include any water treatment or storage facilities, ground water wells or surface water intakes. For further description of water projects, see Section C.2.1

Part A – Municipal Class Environmental Assessment Planning Process

A.1 Introduction and Background

A.1.1 Ontario's *Environmental Assessment Act*

The purpose of the EAA is to provide for *"the betterment of the people of the whole or any part of Ontario by providing for the protection, conservation and wise management in Ontario of the environment."*

The term "environment" is broadly defined in the EAA and generally includes the natural, social, cultural, built and economic environments. For ease of use, the definition of the environment from the EAA has been included in the glossary.

There are generally two types of environmental assessments (EA) that have been established by the EAA:

1. **Individual Environmental Assessments** – An individual EA or application consists of a terms of reference and an EA which require Minister approval (Lieutenant Governor in Council (Cabinet) approval also required for the EA). Individual EAs are generally required for large-scale, complex projects with the potential for significant environmental effects.

2. **Streamlined EAs** – Streamlined EAs include Class EAs, and various regulatory processes, including processes applicable to waste, transit and electricity projects. Class EAs establish a process that proponents may follow for an established class of projects, which if followed allows the proponent to proceed with the undertaking without requiring further approval.

The key principles of a successful EA include:

- **Consultation** with affected parties early in and throughout the process, such that the planning process is a cooperative venture. The proponent should seek to involve potentially affected parties as early as possible, so that their concerns can be identified and addressed before irreversible decisions are made. Early consultation allows for improved understanding of environmental concerns before the undertaking is selected and focuses the planning on matters of concern. Potentially affected parties include technical agencies, the public, property owners, interest groups, other municipalities and Indigenous Communities.

- **Consideration of a reasonable range of alternatives**, both the functionally different "alternatives to" and the "alternative methods" of implementing the solution. The "Do nothing" alternative, which provides a benchmark for the evaluation of alternatives, must be considered.

- **Identification and consideration of the effects of each alternative on all aspects of the environment** (i.e., the impact on the natural, social cultural, technical and economic/financial environment). The level of detail will vary depending primarily on the significance of the effect and the stage of the study.

- **Systematic evaluation of alternatives** in terms of their advantages and disadvantages, to determine their net environmental effects. The planning process must include distinct points where alternatives are evaluated, and the net environmental effects are identified. The decision-making process should be phased, narrowing progressively to a preferred alternative. The process must recognize the dynamic nature of environmental decision-making, must be sensitive to changing conditions and new information, and must be flexible enough to deal with them.

- **Clear and complete documentation** of the planning process followed, to allow "traceability" of decision-making with respect to the project**.** Documentation should set out the approach, and the way in which the principles of environmental assessment planning were followed in the planning process.

A.1.2 Approved Class EA For Road, Water, Wastewater, And Transit Projects

A.1.2.1 Approved Class of Undertakings

An approved Class EA document describes the consultation and impact assessment process that a proponent must follow in order to proceed with the undertaking in accordance with the EAA. The approved Class EA was historically referred to as a "parent" Class EA. The Class EA process provides an alternative to carrying out individual EAs for each separate undertaking or project within the class.

The MCEA establishes an approved EA process for the municipal roads, water, wastewater and transit projects set out in Appendix 1 of this document. Undertakings within the identified class of undertakings can be planned, consulted on, assessed, designed, constructed, operated, maintained, rehabilitated and retired without having to obtain project-specific approval under the EAA, provided the approved Class EA process and applicable requirements in Part II.1 of the EAA are followed.

The MCEA describes the approved planning process and the types of projects that are included in the Class. The process that is implemented through the approval of the Class EA ensures that the intent of the EAA is met by providing for: the identification of problems or opportunities; the identification, evaluation and selection of a preferred means of addressing the problems or opportunities, giving due regard to the need to protect the environment and minimize environmental effects; and, doing the foregoing with the involvement of affected stakeholders and Indigenous Communities in the decision-making process and following the key principles under the EAA.

The MCEA process can be conducted in such a way as to ensure that compliance with other environmental legislation may be achieved. The MCEA process, however, does not

replace or exempt the formal processes of other applicable federal and provincial legislation and municipal by-laws, such as permits or approvals, and the specific public and agency consultation that they may require. Where possible, duplication between the Class EA process and other formal approval processes should be avoided.

A.1.2.1-1/2 Defining the Project

The project consists of all those activities necessary to solve a specific problem (deficiency) or address an opportunity.

If the components are interdependent, then they must be dealt with as a single project. For example, if the problem is to provide additional servicing for future development, then the project must be defined as constituting all those components required to provide servicing to the area. This may include establishing a new roadway, acquisition of land, construction of a bridge, new water intakes, sewage outfalls etc.

Proposed works are separate projects if:

- they are initiated to solve distinctly different sets of problems; and/or
- the resulting works are stand-alone facilities without the requirement of further works to completely solve the problem.

Where a project or parts of the project are classified as different schedules, the entire project shall be planned using the process for the highest schedule activity. If an individual EA is required for part of the project, the entire project shall be planned as part of the individual EA. Schedule A and A+ activities are exempt from the EAA and should not be included as part of the project.

A.1.2.2 Project Schedules

Since municipal infrastructure projects can vary in their potential for environmental effects, projects have been classified into one of four groups or schedules in the MCEA.

The classification of the various undertakings in the approved class of undertakings is provided in Appendix 1. The types of projects and activities are intended to be categorized based on the magnitude of their anticipated environmental impact. In specific cases, however, a project may have a greater environmental impact than indicated by the Schedule. For Schedule B projects, the proponent may, at its discretion, decide to carry out the process for a Schedule C project. For schedule C projects, the proponent may decide to carry out an individual EA. Proponents of exempt projects may decide to carry out an EA-like process outside of the EAA regime.

Exempt

Various maintenance, operation, rehabilitation, and other small projects that are limited in scale and have minimal adverse environmental effects are exempt from the EAA. Previously these projects were classified as Schedule A or A+ but are now classified as exempt. These projects are identified in the first column of the table in Appendix 1.

While these projects are exempt from the EAA, municipalities should consider whether notice about the project should be given or consultation on the project should be carried out. Municipalities should address any concerns raised with respect to the project, as appropriate. Proponents are also responsible for obtaining any other applicable permits, approvals and authorizations for their project.

Other projects may also be eligible for exemption if they meet the requirements of the conditional exemptions including the completion the archaeological screening process. See Eligible for Screening to Exempt below and Appendix 1 for more information.

Eligible for Screening to Exempt
Some projects may be eligible for exemption based on the results of a screening process. Proponents may choose to complete the applicable screening process to determine whether their project is eligible for exemption from the EAA or proceed with the applicable Schedule B or C process. Projects that are eligible for screening are identified in column 2 of the tables in Appendix 1. Proponents must fully and accurately complete the relevant screening process(es) outlined in Appendix 1 to proceed pursuant to the exemption. For the road project #14b in the Municipal Road Projects Table, proponents must complete both the Archaeological Screening Process and the Collector Road Screening Process to be eligible for exemption. Completing the screening processes is voluntary.

Proponents of these projects are strongly encouraged to consider whether notice about the project should be given or consultation on the project should be carried out beyond that required by the screening process. Municipalities should also address any concerns raised with respect to the project, as appropriate. Proponents are also responsible for obtaining any other applicable permits, approvals and authorizations for their project.

Schedule B
Schedule B projects have the potential for some adverse environmental effects. Proponents are required, at a minimum, to complete phases one and two of the planning process set out in Section A.2, including mandatory consultation with Indigenous Communities, directly affected public and relevant review agencies, to ensure that they are aware of the project and that their concerns are identified and considered, and documenting the assessment requirements in a Project File Report. Schedule B projects generally include improvements and minor expansions to existing facilities as well as new smaller scale projects.

Schedule C
Schedule C projects have the potential for significant environmental effects and must proceed through the full planning and documentation process set out in Section A.2. This includes mandatory consultation with Indigenous Communities, directly affected public and relevant review agencies, to ensure that they are aware of the project and that their concerns are identified and considered. An Environmental Study Report must be prepared and filed for review by Indigenous Communities, the public and review agencies. Schedule C projects generally include the construction of new facilities and major expansions to existing facilities.

Section 16 Orders
There is an opportunity to request a higher level of study for Schedule B and C projects through a Section 16 order request to the Minister of Environment, Conservation and Parks on the grounds that the order may prevent, mitigate or remedy adverse impacts on the existing Aboriginal and treaty rights of the Aboriginal peoples of Canada as recognized and affirmed in section 35 of the Constitution Act, 1982. Section 16 Orders are discussed in Section A.2.8.

A.1.2.3 Responsibility for Compliance with the EAA

The MCEA process is a self-assessment process. In all situations where the MCEA is applicable to a project, it is the responsibility of the proponent to ensure that the planning process as set out in the MCEA document is undertaken. If a proponent incorrectly determines that the MCEA does not apply, or if a proponent selects the incorrect Schedule, it is the responsibility of the proponent to rectify the matter and meet the requirements of the MCEA process.

Failure to fully and properly follow the applicable process outlined in this document is a breach of the approval for the MCEA and the proponent would be in contravention of the EAA should they proceed with their undertaking. Offences and penalties are dealt with in Section 38 of the EAA. Staff of the ministry enforce compliance with requirements of the EAA. Non-compliance or failure to apply the approved process in the intended manner may result in:

- Fines and/or penalties under the Act
- Refusal to issue permits under other legislation
- the requirement for the proponent to carry out an individual EA for those projects which previously had been subject to the MCEA process
- Orders under the Act

A.1.2.4 MCEA Framework

Annual monitoring of the MCEA process since 2000, demonstrates that while there have been several serious specific issues, in general the MCEA process is working well and continues to serve the public.

There are many proponents who are knowledgeable and experienced in applying the MCEA process to a full range of straightforward or complex projects and, who have developed their own approach to Master Plans and coordinating EAA requirements with *Planning Act* requirements. There are, however, some municipalities who desire greater direction, assistance or reassurance in carrying out their MCEA process, particularly when interpreting the schedules, conducting Master Plans and coordinating with other legislation, particularly the *Planning Act*.

This document does not provide exhaustive direction on how to manage complex projects or Master Plans. First and foremost, the MCEA provides the framework for assessment and consultation related to municipal infrastructure projects to fulfill the requirements of the EAA. The key elements of the framework are provided in Section A.2. The MCEA establishes principles and certain minimum mandatory requirements and has been set-up as a self-

assessment process which is flexible enough to allow different proponents to meet the needs of specific projects while ensuring that the requirements of the EAA are met. MEA has created a MCEA Companion Guide available on MEA's website.

A.1.3 Proponency

All Ontario municipalities and their public utilities commissions, private sector developers carrying out an undertaking designated by O. Reg. 345/93 made under the EAA (in accordance with section 15.1 of Reg. 334 made under the EAA), and the Ontario Clean Water Agency may proceed with an undertaking set out in the class of undertakings pursuant to MCEA.

Where a number of municipalities and/or private sector developer(s) plan to carry out an undertaking as co-proponents, all terms and conditions of the MCEA apply equally to each co-proponent.

Municipal and private sector developers are urged to determine early in the process who will be the proponent when carrying out an undertaking pursuant to the MCEA.

Alternatively, a proponent may opt to submit an individual EA for their project, regardless of cost, size or environmental impact.

In some cases, an undertaking within the class of undertakings in the MCEA may also include an undertaking or result in an undertaking that is within the class of undertakings in another Class EA. Should this occur, proponents should seek to coordinate with the proponent of the undertaking that would proceed under the other Class EA requirements such as notices, consultation and impact assessment work. Each proponent should identify what their undertaking consists of what their Class EA requirements are and how those requirements will be met. Each proponent must ensure that the requirements with respect to their particular undertaking are met.

Private Sector Developers
Private sector developers is defined as a developer of land other than land belonging to Her Majesty in right of Ontario, a public body or a municipality.

O. Reg. 345/93 (Designation and Exemption - Private Sector Developers) made under the EAA, designates certain undertakings by private sector developers as undertakings subject to the EAA. Private sector developers should review the regulation to determine whether their project is designated as an undertaking that is subject to the EAA. Generally, O. Reg. 345/93 designates road, water or wastewater projects provided for the residents of a municipality that are classified as Schedule C in the MCEA.

Accordingly, those projects to be undertaken by private sector developers which are designated as an undertaking to which the EAA applies are subject to all of the requirements of the MCEA. Section A.2.9 of this document provides a means for integrating the requirements of the EAA and the *Planning Act*, where a proponent wishes to do so.

In addition, municipalities are encouraged to consider requiring developers to fully consider appropriate alternatives even if the project is not designated as an undertaking that is subject to the EAA.

A.1.4 Transition Provisions

For those projects proceeding pursuant to the MCEA which were rescheduled as a result of the 2023 amendments to the MCEA, the following transition provisions apply.

1.4.1 A Notice of Commencement HAS NOT been issued

If a Notice of Commencement has not been issued for a project the proponent must proceed in accordance with the amended MCEA (2023).

1.4.2 A Notice of Commencement HAS been issued but a Notice of Completion HAS NOT

If a Notice of Commencement has been issued for a project, including for projects in a Master Plan, but the Notice of Completion has not been issued prior to the 2023 amendments to the MCEA coming into effect, and subject to any conditions or exceptions set out below the proponent of the project may choose to either:

1. continue with the class environmental assessment process that was started for the project; or,

2. transition the project to the new applicable process based on the categorization of the project in the amended MCEA (2023).

To transition the project, the proponent must follow the transition process set out below. Proponents should consider whether it is appropriate to transition the project based on where in the MCEA process the project is and the consultation that has occurred with government agencies, the public and Indigenous Communities to date.

A proponent may not transition a project where an Indigenous Community has been notified about a project and the Indigenous Community has identified potential impacts on its Constitutionally protected Aboriginal or Treaty rights and the concerns remain outstanding. If there is any question whether an Indigenous Community's concerns are outstanding, the proponent must contact the ministry's Environmental Assessment Branch for direction.

Transition Process

Before being able to transition a project from a Schedule B or Schedule C process to the new applicable screening process(es), the proponent must send a Transition Notice to the ministry, and all identified Indigenous Communities clearly identifying the project to be transitioned, including the location of the project and details of the project, explaining that the project has been reclassified as a result of the 2023 amendments to the MCEA, and that the proponent intends to proceed pursuant to the new applicable process. The Transition

Notice must include information on the applicable screening process(es) that will be followed by the proponent.

The Transition Notice must also provide a **60 day period** for Indigenous Communities to review the Transition Notice, and advise that, during this 60 day period an Indigenous Community may object to the transition of the project on the grounds that the proposed project may have a negative impact on a Constitutionally protected Aboriginal or Treaty Right. Indigenous Communities should be encouraged to copy the ministry on any responses to the Transition Notice.

The Transition Notice must be sent to the Identified Indigenous Communities through two different delivery methods (e.g., by mail, courier, email or through an Indigenous Community's website). Proponents must follow up with the identified Indigenous Communities at least once during the 60 day period to confirm they have received the notice unless a response has already been received from the Indigenous Community.

If an Indigenous Community objects to the transition of the project on the grounds above, the proponent cannot transition the project to the screening process but rather must complete the Schedule B or Schedule C process that was commenced for the project.

If the proponent has not already completed an archaeological assessment for the project, the proponent may also request information from the Indigenous Communities in the Transition Notice to support their completion of the Archaeological Screening Process. Please see Appendix 1 for more information on the Archaeological Screening Process.

Exception
The transition process set out above is not appliable if a project has been reclassified from Schedule C to Schedule B. The proponent may elect to issue its Notice of Completion once the requirements of the Schedule B process have been met, including with respect to Indigenous Consultation. The Notice of Completion must clearly explain that the project has been reclassified as a Schedule B project and the proponent has elected to meet the requirements of Schedule B for the project as provided for in the amended MCEA. If the proponent has not yet completed the public consultation process for the project, the proponent must also identify that the project is being transitioned to the Schedule B process in the consultation materials. Proponents must consider whether it's appropriate to conclude the class environmental assessment for the project after meeting the requirements for a Schedule B project based on the complexity of the project and the environment in which it will be located, and the public, agency and Indigenous Community interest in the project to date.

1.4.3 A Notice of Completion HAS been issued

If a Notice of Completion for a project(s) has been issued, the proponent, if proceeding with the project, must implement the project in accordance with the project documentation. Proponents must fulfill all commitments made during the environmental assessment process and must comply with any order made under the *Environmental Assessment Act* with

respect to the project (i.e., Section 16 order). The revisions and addenda (including time lapse) provisions continue to apply to the project.

A.1.5 Monitoring And Amendments

A.1.5.1 Monitoring of MCEA

The ministry becomes aware of streamlined EAs (e.g., Class EA projects, electricity projects and waste management projects) through notifications by project owners. Notifying the ministry is an important step in the streamlined EA processes. As part of the ministry's ongoing efforts to improve processes and ensure the ministry has an opportunity to provide input on projects undergoing streamlined EAs, the ministry has established dedicated email accounts in each regional office. These accounts will be used to receive notices as required in the MCEA along with a new "Project Information Form". As of May 1, 2018, proponents must use this new process.

Four Step Process for Submitting Notice of Commencement for Streamlined EAs
To submit your notice, you need to do the following:

1. **Download and complete the Project Information Form** (The form can be found at https://www.ontario.ca/page/preparing-environmental-assessments. It is an excel spreadsheet with columns that need to be filled out by the proponent. The form has been developed for ease of use (i.e., drop-down pick list for most fields). Instructions on filling out the form are contained in 2 tabs within the form itself).

2. Create an email. The subject line of your email must include in this order: project location, type of streamlined EA and project name

   For example:
   - York Region, MEA MCEA, Elgin Mills Rd East (Bayview to Woodbine)
   - Durham Region, Electricity Screening Process, New Cogeneration Station
   - City of Ottawa, Waste Management Screening Process, Landfill Expansion

3. Attach the completed Project Information Form (in excel format) and a copy of your project notice (in PDF format) to the email.

4. Send by email to the appropriate ministry regional office:

Central Region	eanotification.cregion@ontario.ca
Eastern Region	eanotification.eregion@ontario.ca
Northern Region	eanotification.nregion@ontario.ca
Southwest Region	eanotification.swregion@ontario.ca
West Central Region	eanotification.wcregion@ontario.ca

   ***Note** – Notices should not be submitted to any other contacts in the ministry beyond the regional email addresses, unless otherwise requested to do so.

Three Step Process for Submitting Notice of Completion for Streamlined EAs

To submit your notice, you need to do the following:

1. Create an email. The subject line of your email must include in this order: project location, type of streamline EA and project name.

   For example:
   - York Region, MEA MCEA, Elgin Mills Rd East (Bayview to Woodbine)
   - Durham Region, Electricity Screening Process, New Cogeneration Station
   - City of Ottawa, Waste Management Screening Process, Landfill Expansion

2. Attach a copy of your project notice in (PDF format) to the email.

3. Send by email to the appropriate ministry regional office:

Central Region	eanotification.cregion@ontario.ca
Eastern Region	eanotification.eregion@ontario.ca
Northern Region	eanotification.nregion@ontario.ca
Southwest Region	eanotification.swregion@ontario.ca
West Central Region	eanotification.wcregion@ontario.ca

   Notes:
   - Notices should not be submitted to any other contacts in the ministry beyond the regional email addresses, unless otherwise requested to do so.
   - The Ministry District Office Locator website can be used to assist with determining what ministry region your project is located: https://www.ontario.ca/page/ministry-environment-conservation-and-parks-district-locator
   - If your project is located in more than one ministry region, the proponent shall submit notices to all appropriate regions.

This will provide a record of projects undertaken within the province for use during the next review of the MCEA.

In addition, representatives of the MEA will meet with staff of the ministry's Environmental Assessment Branch on an annual basis to review any comments received.

A.1.5.2 Amending Procedure for the MCEA

The following summarizes the process for requesting amendments to the MCEA and the authority for the Director and Minister to make amendments to the Class EA. To the extent that there is a conflict between what is set out below and the provisions in the EAA in respect of the authority of the Minister or Director, the provisions in the Act prevail.

Section 15.4 of the EAA sets out the authority for the Minister of the Environment, Conservation and Parks and the Director of the Environmental Assessment Branch (EAB) at

MECP to amend the Class EA. An amendment may be made at any time and may be initiated by the Minister or the Director, or as a result of a request for an amendment.

The Minister may amend the Class EA if the Minister is satisfied that the amendments are consistent with the purpose of this Act and the public interest. Examples of the types of amendments that the Minister may make include:

1. Improving the efficiency or the effectiveness of the process described in the document;
2. Adding new projects to the Class EA;
3. Recategorizing existing undertakings in the Class EA; and
4. Updating the Class EA to be consistent with new or updated guidelines, policies, regulations or legislation.

The Director may amend the Class EA to make any of the administrative changes set out in section 15.4(5) of the EAA as described below**.**

1. Correcting errors that are editorial or typographical in nature;
2. Updating references to a guideline, Act or regulation, or provisions or other portions of an Act or regulation;
3. Updating references to bodies, offices, persons, places, names, titles, locations, websites or addresses; or
4. Clarifying the existing text of the Class EA.

Written requests for amendments to a Class EA must be submitted to the Director of the EAB at the ministry. In some cases, the Minister may not consider a requested amendment until the next review period, as described below.

If an amendment is made, the proponent shall incorporate the amendment into a revised Class EA document. Amendments can be appended to the Class EA document or incorporated directly into the body of the document.

Amendment Process

The two types of amendments, Director and Minister, are described in the following sections.

<u>Director Amendments</u>
To request a Director's amendment, a formal written request must be submitted to the Director and must include details on the proposed amendment and the reason for the request.

Based on the information before the Director, the Director will decide whether to amend the Class EA. The Director will notify the proponent of any amendments so that the proponent can update the Class EA document and make the amended document available.

The Director may also initiate an administrative amendment on their own initiative. The proponent will be advised in writing if an administrative amendment is made by the Director. The amendment will come into effect upon publication of a notice of the amendment in the registry under the *Environmental Bill of Rights, 1993.*

Minister Amendments

Requests for Minister amendments should be made in writing to the EAB. The request should include the current text in the Class EA, the proposed changes and rationale for the changes, and revised text. The ministry may request additional information regarding the requested amendment.

The Minister may also initiate an amendment on their own initiative. The proponent will be advised by the ministry in writing if a Minister's amendment is being considered.

As part of the request for an amendment, a consultation plan must be submitted to the ministry. The consultation plan may outline the method for consultation on the proposed amendments and identify the persons, agencies, ministries and Indigenous Communities to be consulted. The proponent will undertake consultation in accordance with the plan and is required to address and respond to any concerns that are raised during the consultation and provide those concerns and responses to the ministry for consideration as the Minister is required to ensure adequate public notice and an opportunity for public comment in respect of any proposed amendments and the proponent's consultation.

The ministry will undertake consultation on any Minister initiated amendments and may undertake additional consultation on requested amendments.

Based on the information before the Minister, the Minister may:

a. amend the Class EA, as requested or with changes to what was requested; or,
b. refuse to amend the Class EA.

The Minister will give notice of the Minister's decision, together with written reasons to the proponent of the Class EA and any other person the Minister determines appropriate. The Minister's amendments to the Class EA come into effect following publication of notice in the registry under the Environmental Bill of Rights, 1993.

A.1.6 Amendments to the MCEA

In 2000, the MCEA prepared by the MEA on behalf of proponent municipalities, was approved under the EAA. As part of the approval given by the Minister of the Environment, the MEA is required to undertake annual monitoring of the MCEA process to ensure the effectiveness of its continued use. In addition, the MEA is required to carry out a more comprehensive review of the MCEA process as part of the five-year reviews that are required by the Notice of Approval.

Over the years, a number of minor and major amendments to the MCEA have been proposed and approved and the MCEA document updated accordingly. These amendments include:

- 2007 – Amendment to create the Schedule A+ and to create the Transit section;

- 2011 – Amendment to revise Section A.2.9 *Integration with the Planning Act;*

- 2015 – Amendment to the Roads section of Appendix 1 to include Active Transportation Facilities;

- 2023 – Amendment to Appendix 1 and other various sections as described below:
    - changing the project schedules in Appendix 1 to better align study requirements with the potential environmental impact of the project and reduce duplication. This includes exempting low-risk projects and reclassifying other project types.
    - Updating various sections of the MCEA to clarify and modernize process requirements.

A.1.7 Ministry Codes of Practice and Climate Change Guidance

The ministry has developed codes of practice to provide guidance on key aspects of the Class EA process. The codes of practice include:

- *Preparing, Reviewing and Using Class Environmental Assessments in Ontario;*
- *Consultation in Ontario's Environmental Assessment Process; and*
- *Using Mediation in Ontario's Environmental Assessment Process.*

Together, the codes of practice:

- set out the ministry's expectations for the content of a variety of EA documents and provide guidance on the roles and responsibilities of all participants in the EA process;
- provide clear direction to proponents, EA practitioners, and other stakeholders involved in both individual and streamlined EA processes including Class EAs, consultation and mediation; and
- promote the transparency of government involvement and the decision making process when projects must meet the requirements of the EAA.

In addition to these codes of practice, the ministry has also developed the following guidance document: *Considering Climate Change in the Environmental Assessment process.*

This guide is a companion to the codes of practice and sets out the ministry's expectations for considering climate change in the preparation, execution and documentation of EA studies and processes.

The guide describes two types of climate change effects that can be considered. The first is

the effect that a project can have on climate change. In this instance, the issue to be considered is the degree to which the project can provide some climate change **mitigation** measures by reducing carbon emissions and/or enhancing/protecting natural landscapes that act as carbon sinks. The second is the effect climate change has on a project. In this instance, the issue to be considered is the degree to which the project can demonstrate **adaptation** to climate change impacts.

Climate Change Mitigation
Climate change mitigation is a "big picture" issue. The most significant impact where decisions are made for climate change mitigation (i.e., greenhouse gas emission reduction / protection and enhancement of natural areas as carbon sinks) relates to high level planning in a community. These types of planning decisions generally take place long before an undertaking is considered in the context of the *EAA.* These decisions are made through the development of Official Plans and Secondary plans under the *Planning Act*.

The Provincial Policy Statement and the A Place to Grow: Growth plan for the Greater Golden Horseshoe address the need for climate change considerations in these high-level planning decisions. Infrastructure system development expansion and improvement projects that fall under the MCEA follow the strategic direction of these high-level planning decisions. The impact on climate change mitigation between alternative conceptual solutions (Phase 2 of the MCEA) or optional design approaches (Phase 3 of the MCEA) could be relatively minor at this stage of the development of an undertaking. This would be a basis for a proponent to scale the level of evaluation associated with climate change mitigation assessment in the project.

A logical approach to incorporate some consideration into the MCEA evaluation is to include climate change mitigation criteria into the decision-matrix as one of the factors impacting the selection of a preferred solution (Phase 2 of the MCEA) and/or preferred project design option (Phase 3 of the MCEA). Possible criteria descriptions may be as follows:

- Potential for greenhouse gas emission reduction measures; and
- Potential for protecting/enhancing carbon sinks (i.e., natural landscapes)

These accommodate qualitative statements, such as "high / medium / low" to be part of the decision matrix based on potential measures that an option may be able to accommodate in reducing greenhouse gas emissions or protecting / enhancing carbon sinks.

Climate Change Adaptation
Climate change adaptation is a project specific issue. Any weather event related to climate change that exerts an influence on a project can be considered an effect of climate change on a project. Extreme weather events and phenomenon are changing the performance of level of service for existing infrastructure systems and impacting the basis of designing new systems for the future.

Climate change effects can be localized to property / project specific sites (e.g., flooding from extreme rainfall events), or widespread over large areas or regions (e.g., higher community water demands from drought conditions, higher power demands for heating and

cooling from cold and hot temperature extremes, ecosystem resilience issues from rain, drought, ice and windstorms or other extreme events of nature).

Effects of climate change on widespread areas would typically be addressed in master plan and high-level planning studies of community infrastructure needs. As with climate change mitigation, many of these decisions would be addressed through higher level community planning processes under the *Planning Act* and aligning with appropriate Provincial Policy Statements, and other policies that incorporate climate change considerations.

Addressing the potential effects of climate change on localized properties and projects ultimately becomes part of the design process, where infrastructure systems and structures are designed in such a way as to adapt and be resilient to extreme weather events. The impact on climate change adaptation between alternative conceptual solutions (Phase 2 of the MCEA) or optional design approaches (Phase 3 of the MCEA) could be relatively minor at this stage of the development of an undertaking. This would be a basis for a proponent to scale the level of evaluation associated with climate change adaptation assessment in the project.

A logical approach to incorporate some consideration into the evaluation, if warranted, is to include climate change adaptation criteria into the decision-matrix as one of the factors impacting the selection of a preferred solution (Phase 2 of the MCEA) and/or preferred project design option (Phase 3 of the MCEA). Possible criteria descriptions may be stated as follows:

- Vulnerability of project/infrastructure to climate change effects; and
- Flexibility to incorporate climate change adaptation measures in design.

These criteria accommodate qualitative statements, such as “high / medium / low” to be part of the decision matrix based on degree of vulnerability between options to climate change effects and flexibility to accommodate adaptation features into the design of an undertaking.

Climate Change Conclusions

The proponent should avoid including specific detailed design features in the project analysis, particularly if these specific design features can be readily incorporated with any of the selected alternatives. Instead, the project analysis should focus on factors that contribute to selecting the best alterative solution.

The proponent would also decide what weighting the climate change criteria would carry relative to the other criterion in the decision matrix.

The outcome of these considerations would result in proponent commitments through recommendations in the Project File Report or Environmental Study Report to address adaption measures in the implementation of the preferred project (i.e., Phase 5 – design and construction of the MCEA).

In summary, climate change considerations need to be incorporated into the MCEA process, but these must be scaled appropriately to be practically applied for the types of

projects proceeding pursuant to MCEA.

A.2 Planning and Design Process

The main elements of the approved planning and design process and its application are that it:

- incorporates the key features of the EA process (see Section A.1.1.);
- follows five basic phases which are conducted within a framework of environmental protection, effective consultation with Indigenous Communities and stakeholders including review agencies, the public, property owners, interest groups, and traceable decision-making;
- outlines mandatory consultation and documentation requirements (these are a minimum only and in many cases project requirements may require them to be expanded);
- provides a flexible framework to respond to varying levels of complexity and sensitivity (see Section A.2.1.1), and, iterative in that it is not necessarily sequential since the findings in one step may result in a previous step being revisited;
- is comprehensive since it considers a broad range of environmental issues;
- is a self-assessment process where the responsibility for the process and compliance with the requirements of the MCEA rests with the proponent;
- can be applied to a single project or a Master Plan, or integrated with projects which come into effect with the completion of the MCEA process and approval under the *Planning Act*; and
- defines the minimum requirements for environmental assessment planning which the proponent is responsible for "customizing" to address the needs of a specific project.

This document does not provide exhaustive direction on how to manage complex projects or Master Plans. First and foremost, the MCEA provides the framework for EA planning of municipal infrastructure projects to fulfil the requirements of the EAA. It is neither an all-inclusive "checklist" nor a detailed "how to" manual for proponents, project managers or stakeholders. It establishes principles and certain minimum mandatory requirements and has been set-up as a self-assessment process which is flexible enough to allow different proponents to meet the needs of specific projects while ensuring that the requirements of the EAA are met. If a proponent determines that it requires more specific direction, then it may be appropriate for them to develop their own guidance documents to provide supplementary direction for project managers.

The planning and design process was originally developed to apply to specific projects and is usually applied by the majority of municipalities in this manner. While proponents may use this process to meet the requirements of the EAA, planning on a project-by-project basis may not always be the most appropriate in all situations. Municipalities are encouraged to prepare Master Plans to address groups of projects, an overall infrastructure system, a number of integrated systems or to co-ordinate the requirements of both the EAA and the *Planning Act* through the development of long range multi-disciplinary plans.

The development of “Master Plans” provides relief to the proponent from fulfilling the project-specific requirements of the EAA. As long as such plans integrate the principles of successful EA planning outlined in Section A.1.1, the proponent will benefit in the long term by reducing the time and costs associated with undertaking specific studies to support individual project planning. Master Plans are discussed in Section A.2.7 and Appendix 4.

Proponents and stakeholders have identified the general desire to further encourage the co-ordination and integration of the planning processes and approvals under the EAA and the *Planning Act*. An “integrated approach” is addressed in Section A.2.9 and may be applied to a specific project or at the broader Master Plan level.

Proponents are encouraged to carry out an EA process at the earliest possible stage. The MCEA process can be most beneficial when it is applied early in the municipal planning process, while land use and servicing alternatives are still under consideration. **By coordinating land-use planning under the *Planning Act* and infrastructure planning under the MCEA process, proponents can meet the requirements of both processes in the most expeditious manner. Regardless of the approach taken for any undertaking subject to the MCEA, the proponent is responsible for ensuring that the requirements of the MCEA and principles of its application are met.**

A.2.1 Five Phase MCEA Planning Process

The main elements of the MCEA planning process are incorporated in the following five phases:

PHASE 1	PHASE 2	PHASE 3	PHASE 4	PHASE 5
Problem or Opportunity	Alternative Solutions	Alternative Design Concepts for Preferred Solution	Environmental Study Report	Implementation
Optional Consultation	**Mandatory Consultation**	**Mandatory Consultation**	**Mandatory Consultation**	Optional Consultation

EXHIBIT A. 1 KEY FEATURES OF THE MCEA

	PHASE 1	PHASE 2	PHASE 3	PHASE 4	PHASE 5
BASIC PROCESS (See Exhibit A.2 for detailed flow chart)	*PROBLEM OR OPPORTUNITY*	*ALTERNATIVE SOLUTIONS*	*ALTERNATIVE DESIGN CONCEPTS FOR PREFERRED SOLUTION*	*ENVIRONMENTAL STUDY REPORT*	*IMPLEMENTATION*
Consultation Requirements	*Optional*	*Mandatory*	*Mandatory*	*Mandatory*	*Optional*
EXEMPT	✓				✓
SCHEDULE B PROJECTS	✓	✓			✓
SCHEDULE C PROJECTS	✓	✓	✓	✓	✓
MASTER PLANS	✓	✓	✓	✓	✓

Notes:

- At a minimum, master plans the same steps of the first two phases of the MCEA process.

EXHIBIT A.2. MUNICIPAL CLASS EA PLANNING AND DESIGN PROCESS

NOTE: This flow chart is to be read in conjunction with Part A of the MCEA

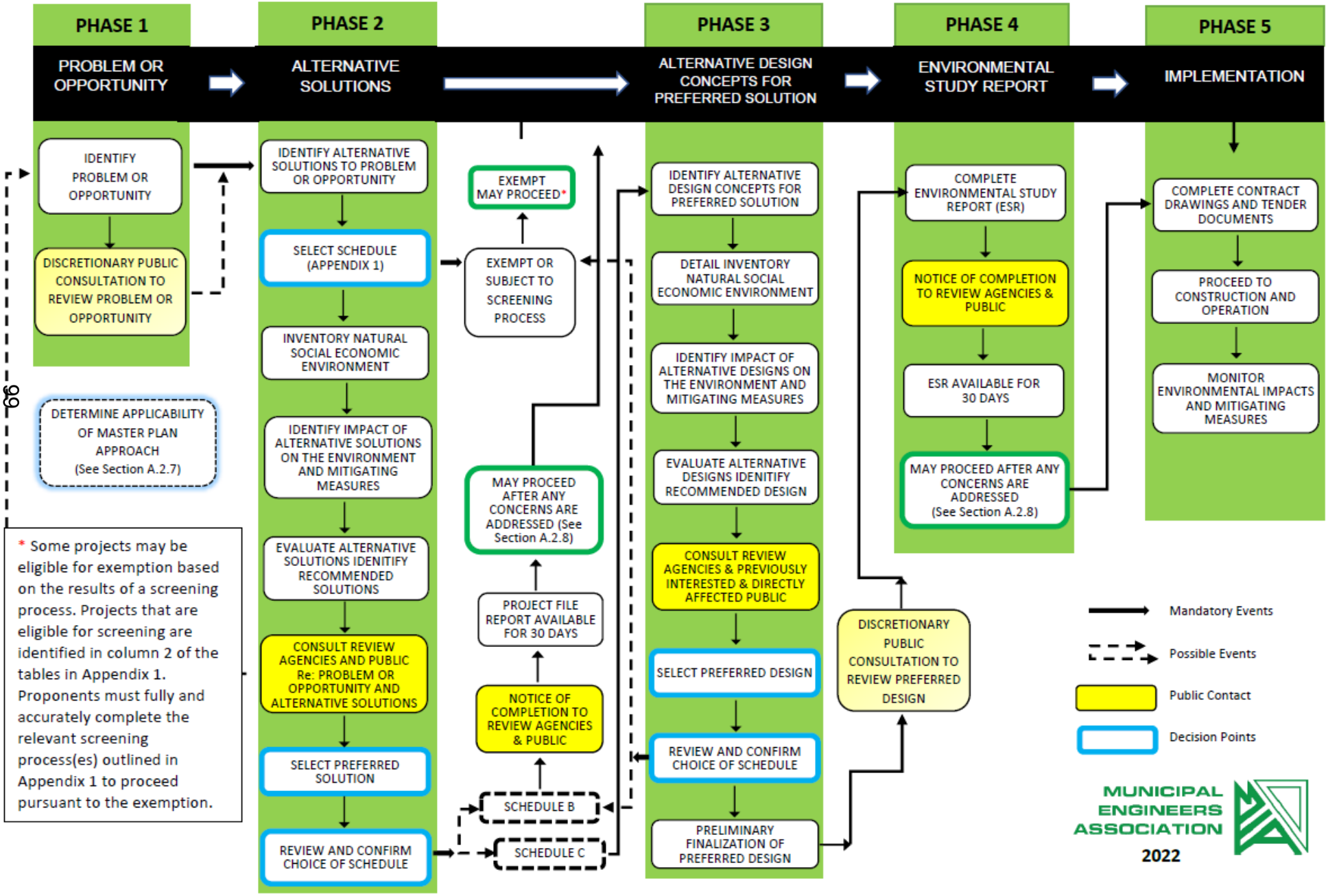

In brief, the phases are summarized as follows:

Phase 1 Identify the **problem (deficiency) or opportunity.**

Phase 2 Identify **alternative solutions to** address the problem or opportunity by taking into consideration the existing environment, **and establish the preferred solution taking into account public, Indigenous Community and review agency input**. At this point, determine the appropriate Schedule for the undertaking (see Appendix 1) and document decisions in a Project File Report for Schedule B projects, or proceed through the Phases 3 and 4 for Schedule C projects.

Phase 3 Examine **alternative methods** of implementing the **preferred solution,** based upon the existing environment, public, Indigenous Community and review agency input, anticipated environmental effects and methods of minimizing negative effects and maximizing positive effects.

Phase 4 Document, in an **Environmental Study Report** a summary of the **rationale, and the planning, design and consultation process of** the project as established through the above Phases, and make such documentation available for review by agencies, Indigenous Communities and the public.

Phase 5 Complete contract drawings and documents and proceed to **construction and operation; monitor construction** for adherence to environmental provisions and commitments. Where special conditions dictate, also **monitor the operation** of the completed facilities.

The planning and design process shall be undertaken in such a way as to allow a reviewer to trace each step of the process. In particular, the documentation should explain the reasons for the criteria used to identity and assess the alternatives, the proponent's weighing of these criteria and the decision-making process followed.

To ensure that the planning and design process is easily traceable, the proponent shall ensure that:

- the analysis is understandable to the reasonable lay observer;
- all conclusions drawn from the analysis follow logically from the information gathered and presented; and
- a reasonable lay observer is able to replicate the conclusions based on the information presented.

The main phases and their application to single projects or Master Plans are identified in Exhibit A.1. The steps in each phase are identified in the Flow Chart, Exhibit A.2, which illustrates the process followed in the planning and design of projects covered by the MCEA. The flow chart incorporates the steps considered essential for compliance requirements of the EAA, which are discussed with the commencing in Section A.2.2.

It should also be noted that the process outlined in the following sections is not necessarily sequential. It can be an iterative process whereby the results of one step may necessitate re-evaluation of a previous step.

A.2.1.1 Level of Complexity

The following sections describe the planning process in the MCEA. It is important, however, to recognize that there is flexibility within the process to be responsive to specific project and consultation needs, while ensuring that the requirements of the MCEA are met.

Level of complexity or sensitivity can relate to the nature of the problem or opportunity being addressed, the level of investigation required to assess alternatives and environmental effects, and public, Indigenous Community, and agency issues and concerns. The level of complexity may affect the selection of the project schedule, and the scope of each phase in the MCEA process as well as the need to revisit steps in the process. **The level of complexity will therefore affect the manner in which a project proceeds through the process.**

The complexity of a project is based on many components, including environmental effects, public and agency input and technical considerations, and how these interrelate on a specific project. **Accordingly, the determination of complexity (and its ongoing assessment) requires sound professional judgement, is an inherent function of the management of a project and, is the responsibility of the proponent.**

Given the varying levels of complexity, the divisions amongst Schedules B and C projects are therefore often not distinct. Historically, the MCEA would allow proponents to elevate any project to a higher schedule if they wanted to follow a more comprehensive planning process for a project with less or no requirements (e.g., Schedule A). However, as Schedule A and A+ projects are now exempt from the EAA, they can no longer be elevated to a Schedule B or C process. Proponents of these projects may choose to carry out a process for these projects outside of the formal process under the EAA. Alternatively, proponents of Schedule B projects may decide to follow Schedule C requirements if the project is particularly complex or controversial and may warrant efforts beyond the minimum Schedule B requirements.

For those projects that are eligible to be screened to exempt, the project would be subject to the Schedule B or C process specified in the table in Appendix 1 if the screening process is not successfully completed. While these projects are eligible to be screened for an exemption, use of the screening process is voluntary. Proponents may decide to follow the Schedule B or C planning process, as indicated in the table in Appendix 1, where there is a greater potential for public interest or environmental impacts.

While the MCEA document defines the minimum requirements, the proponent is responsible for “customizing” it to reflect the specific complexities and needs of a project.

There is no need to automatically follow all of the steps of a higher Schedule. Instead, the proponent could simply expand the process to incorporate the components that will provide

benefit to the community. All of the above can be accomplished without elevating the project to a Schedule C process (e.g., consulting on a preferred conceptual design (road cross sections).

***IMPORTANT NOTE* -** When a proponent has a particularly complex or controversial project and decides to add extra steps (public engagement, more consideration of alternatives, extensive documentation or elevate a project to a higher Schedule), this extra effort should not become normal practice. Remember that this extra effort was justified for a specific project because of the unique circumstances. Unless the next project also has unique circumstances, the project should follow the process outlined in the MCEA.

The foregoing should be considered not only at the outset of project planning but as one proceeds through the process and reviews and confirms the project schedule.

All activities undertaken in the planning process must be documented and records maintained in a form which can be presented to the public for review. However, the proponent need only gather and document information which is likely to have a direct bearing on impacts and mitigating measures. The level of detail of the information to be inventoried should reflect the potential severity of the impacts predicted.

Lastly, it should be noted that the process outlined in the following sections is not necessarily sequential. It can be an iterative process whereby the results of one Step may necessitate re-evaluation of a previous Step.

A.2.2 Phase 1: Problem Or Opportunity

Step 1 **Identification and description of the problem or opportunity.** Municipalities generally undertake projects in response to certain identified problems or deficiencies. These problems or opportunities may or may not be obvious to the public, but it is necessary to document factors which lead to the conclusion that an improvement or change is needed. Earlier studies or reviews undertaken by the proponent may be available to assist in defining the problem. **This phase should therefore lead to the development of a clear statement of the problem or opportunity being addressed.**

From the problem statement, a project will be developed. In assessing the magnitude and extent of a problem therefore the scope of the project, it is important that the projects **not be broken down or piecemealed** into component parts or phases, with each part being addressed as a separate project. **If the component parts are dependent on each other, then all of the components must be combined and dealt with as a single project.**

Step 2 **Discretionary Public Consultation.** For projects which are expected to generate considerable public or Indigenous interest or controversy, the proponent may find it advantageous to introduce a discretionary Step 2 and commence the

consultation process in order that the public may be involved at this stage in defining the problem and formulating the problem statement.

Optional Prior to commencing the study, or during the course of defining the problem or opportunity, it may become apparent that a Master Plan approach is appropriate, or coordination with the *Planning Act* is beneficial. These are discussed in Sections A.2.7 and A.2.9 respectively.

A.2.3 Phase 2: Alternative Solutions

The procedures outlined in Phase 2 will lead the proponent to the conclusion that the project:

- is exempt;
- is eligible for exemption based on the results of the screening process(es) in Appendix 1;
- should proceed through Schedule B or C despite being eligible for screening;
- is subject to Schedule B requirements;
- is subject to Schedule C requirements; or,
- should proceed through an Individual EA.

Project schedules are identified in Appendix 1. The planning process in Phase 2 involves the following Steps:

Step 1 **Identification of alternative solutions to the problem.** There is usually more than one way to solve a problem. All reasonable and feasible solutions shall be identified and described.

At the conclusion of Step 1, the proponent is usually able to establish whether the project is classified as exempt in the table in Appendix 1 or is eligible for screening through the screening processes also set out in Appendix 1, to determine whether the project is exempt. This is the **first point at which the schedule for the project is determined** and the proponent may:

- conclude that the project is exempt (previously referred to as Schedule A or A+). In this case, the proponent may proceed to implement the project without any further Class EA work while recognizing the obligation to minimize environmental impacts while doing so, subject to any other permits or approvals. The problem/opportunity identified in Phase 1 will be considered to have been resolved.
- conclude that the project is eligible for screening through the screening process(es) outlined in Appendix 1. If screened as exempt, the proponent may proceed to implement the project without any further work under the MCEA while recognizing the obligation to minimize environmental impacts while doing so, subject to any other permits or requirements. The problem/opportunity identified in Phase 1 will be considered to have been resolved.

- decide to undertake either the Schedule B or C project process despite being eligible to use the screening process(s).
- decide that the project is classified as Schedule B or Schedule C, in which case the proponent shall continue to plan the project through the following steps.

These are preliminary decisions, however, and depending on the nature and complexity of the project may need to be reviewed and confirmed at later points in Phases 2 and 3.

In some cases, the proponent may decide not to continue with the project, for example, should the project have significant environmental effects which are not mitigable.

Step 2 **Preparation of a physical description of the area where the project is to occur, and a general inventory of the natural, social, built and economic environments** which are to be considered when reviewing the effects of a project in that area.

Step 3 **Identification** of the magnitude of the **net positive and negative effects of each alternative solution in Step 1,** with respect to the environmental factors identified in Step 2. Identify **mitigating measures**.

Step 4 **Evaluation** of all reasonable **alternative solutions,** identified in Step 1, taking into consideration the environmental and other factors identified in Steps 2 and 3. For projects which are relatively straightforward and uncontroversial this Step may lead to **the preliminary identification of a recommended solution** which should be conveyed to Indigenous Communities, the public and government review agencies in the following Step 5. This has the advantage that reviewers will have a better idea of the proponent's preliminary conclusions and will allow reviewers to focus their attention on the recommended solution.

It is important that the recommended solution not be presented as a decision but as a preliminary preference based on a rational evaluation of available information. Input is necessary and important at this point to assist the proponent by providing additional information, in reviewing the evaluation and in arriving at the best decision.

Step 5 **Consultation with review agencies, Indigenous Communities, and the public to solicit comment and input.** By making interested parties aware of the information gained up to this point in the process, including the problem or opportunity, the environmental considerations to be addressed during the evaluation of alternatives, the alternative solutions being considered and their impact on the environment, and the evaluation itself, other pertinent factors may come to light. The notification may also include the proponent's recommended solution, as outlined in Step 4 above (see Section A.3 Consultation and Appendix

3, Screening Criteria, for further details). **This is the first mandatory point of contact.**

Step 6 **Selection or confirmation of the preferred solution** to the problem or opportunity taking into consideration input and comment received from the review agencies, Indigenous Communities and the public and after evaluation of the net environmental effects of the various alternatives. Depending on the situation, the preferred solution may involve a combination of alternative solutions rather than a single outcome.

At this point, the proponent shall **review the classification of the project,** Schedule B or C, and either confirm this decision or conclude otherwise.

Schedule B:

- If the proponent concludes that the project is **Schedule B** then documentation of the planning process shall be finalized and placed on file (see Section A.4.1, Schedule B - Project File Report for requirements for documentation).

  To complete the Schedule B process, a **Notice of Completion** shall be issued to Indigenous Communities, review agencies and the public and a period of at least 30 calendar days shall be allowed for comment and input. The Notice shall include information on requesting a section 16 order (See Section A.2.8).

  Proponents **cannot** proceed with a project until **at least 30-days** after the end of the public comment period, including any extension, identified in the Notice of Completion. If no section 16 order request has been received by the ministry and a notice of proposed order has not been given by the Director, the proponent may proceed to implement the project, based on the preferred solution, and may proceed with detailed design and the preparation of contract drawings and documents.

Schedule C:

- If the proponent concludes that the project is **Schedule C**, then the proponent must complete **Phases 3, 4 and 5.**

Other:

- If the proponent concludes that the problem as originally defined has to be re-defined, then the proponent shall return to Phase 1 with a new problem statement. If the proponent concludes that the project should undergo an **individual EA**, then the procedures and requirements of the EAA shall be followed i.e., preparation of a terms of reference for **submission to the Minister for review and decision**.

A.2.4 Phase 3: Alternative Design Concepts for the Preferred Solution

Phase 3 outlines a process similar to that followed in Phase 2. In Phase 3, possible design concepts that might be utilized to implement the preferred alternative solution identified in Phase 2 are evaluated. **Steps to be taken are:**

Step 1 **Identification of alternative designs for the preferred solution.** There are usually a number of ways in which a project can be developed and designed to implement the preferred solution. Each reasonable design shall be identified and described.

Step 2 **Preparation of a detailed inventory of the natural, social, built and economic environments.** At this point, rather than dealing with the general environment of the area, the particular components of the environment that must be considered and evaluated shall be identified in detail. **However, this only needs to be carried out to the extent necessary to select a preferred design.**

Step 3 **Identification of the potential impact of the alternative designs.** The impact of each alternative design on the environment (inventoried in Step 2) shall then be established. Appropriate mitigating measures shall also be identified and evaluated. Depending on the complexity or magnitude of the project, Steps 2 and 3 may involve detailed environmental studies to ensure that sufficient and appropriate information is available to base ensuing decisions and to allow the public, review agencies, and Indigenous Communities to fully understand the environmental implications of the project.

Step 4 **Evaluation of the alternative designs**, taking into consideration all the environmental impacts identified in Step 3 and appropriate mitigating measures. This Step will probably lead to the preliminary identification of a recommended design.

Step 5 **Consultation with review agencies, Indigenous Communities, and the public**, including those who previously expressed interest and/or concern and those directly affected by the project, to solicit comment and input. At this point the project is usually well developed, the results and conclusions from studies and investigations are available and some design detail may have been prepared to indicate how the preliminary recommended design will be employed to implement the preferred solution. Environmental impacts of the project will be well understood and the rationale for the identification of the recommended design will be clear.

This information must be shared with Indigenous Communities, the public and review agencies at this point to obtain further comment and input. **It is important, however, that the recommended design is not presented as a decision but as a preliminary preference based on a rational evaluation of available information.** Input from Indigenous Communities, review agencies and the public is necessary and important at this stage to assist the proponent by providing additional information, in reviewing the evaluation and in arriving at the best decision. Where studies are necessary to support the decisions made, the

feasibility of the preferred alternative, and the conclusions drawn about the environmental impacts and mitigation measures (for example, hydrogeological study for a communal water supply) review agency input on the technical studies at or before Step 5 is critical.)

Indigenous Communities, the public and review agencies should be aware of how to comment and raise concerns and the ability to make a section 16 order request (see Section A.2.8) through this notification. **This is the second mandatory point of contact with the public for Schedule C projects.**

Step 6 **Selection or confirmation of the preferred design.** Having identified all environmental impacts, having determined **mitigating measures** to minimize impact on the environment, and having gained further input from interested parties, the preferred design can be confirmed.

At this point, the proponent is able to **review and confirm project status.** The environmental significance of the preferred design shall be reviewed to confirm that the planning process for Schedule C projects is appropriate and that the remaining procedures in Phases 4 and 5 should be followed. Alternatively, the proponent may decide that concerns and issues raised by the public are such that they cannot be resolved by the MCEA process. In this case it may be appropriate for the proponent to undertake an individual EA for the project. This proponent should discuss this option with the ministry to confirm the approach.

Step 7 **Preliminary finalization of preferred design.** The design has been selected with the assistance of input from the public and the proponent is now able to begin design of the project in sufficient detail to be able to outline the project in the Environmental Study Report. Finalization of detailed design should await Phase 5, after the Environmental Study Report has been issued and reviewed by the public.

A.2.5 Phase 4: Environmental Study Report

Phase 4 represents the culmination of the planning and design procedures set out in the MCEA. The proponent is now required to document in a report all the activities undertaken to date through Phases 1, 2 and 3. This documentation is embodied in an **Environmental Study Report**.

The following Steps shall be followed in this Phase:

Step 1 **Completion of the Environmental Study Report.** The report is intended to be a traceable and easily understood record of the proponent's decision-making process. A more detailed description of the contents and format of the Environmental Study Report, including requirements for filing, review and amendments, are contained in Section A.4.2. The following brief outline sets out the general requirements:

a) A description of the problem or opportunity and other background information.
b) The rationale employed in selecting the preferred solution to the problem.
c) The rationale employed in selecting the preferred design.
d) A description of the environmental considerations and impacts.
e) The mitigating measures which will be undertaken to minimize environmental effects.
f) A description of the consultation process and an explanation of how concerns raised by the public, Indigenous Communities and review agencies have been addressed in developing the project.
g) A description of the monitoring program which will be carried out during construction and, if necessary, for a specific time during operation.
h) Details of the ways in which the results of a monitoring program will be communicated to the public, Indigenous Communities and review agencies shall be included.

Step 2 **File the Environmental Study Report** with the Municipal Clerk **and place on the public record for at least 30 calendar days for review by Indigenous Communities, the public and review agencies**. At the time of filing this report, Indigenous Communities, the public and review agencies must be notified. This is accomplished by the mandatory issue of Notice of Completion, as detailed in Section A.3.4.1. This Notice constitutes the **third mandatory contact point** and carries a **mandatory requirement to include notification of the provision** to request a section 16 order.

If a proponent decides to or agrees to extend the comment period provided in the Notice of Completion, the proponent must give the Director of EAB notice of the extension.

Step 3 **Waiting Period and Section 16 Order Requests**. Proponents must wait at least 30 days following the end of the comment period or any extended comment period before proceeding with the undertaking. Proponents cannot proceed if a section 16 order request is received, an order is made, and the terms of the order have not yet been met or a notice of proposed order has been given by the Director. Refer to section A.2.8 for more details on section 16 of the EAA.

A.2.6 Phase 5: Implementation

Phase 5 consists of three steps:

Step 1 **Completion of contract drawings and tender documents.** The contract drawings documents and the method of construction shall embody the selected design and the environmental provisions and mitigating measures developed throughout the planning process and as detailed in the Project File Report or Environmental Study Report: the proponent is not free to arbitrarily change or omit these provisions.

Tenders should be issued after the expiration of the final 30-day comment period, and the waiting period prescribed by the EAA.

Step 2 **Proceeding to construction and operation.** Contracts are awarded, construction takes place, and the project is implemented, commissioned and placed into operation. It is recognized, however, that circumstances may arise which make it impossible to implement the project as outlined in the Project File Report or Environmental Study Report, which delay its implementation. In this case an addendum to the Project File Report or Environmental Study Report may be necessary and the procedure to be followed is set out in sections A.4.1.1 and A.4.3.

Step 3 **Monitoring for environmental provisions and commitments.** The Project File Report or Environmental Study Report will detail the potential effects of a project on the environment, and the mitigating measures, if any, to be taken to avoid, eliminate, prevent or minimize such effects. **The monitoring program outlined in the Project File Report or Environmental Study Report shall be undertaken to ensure that the environmental provisions and commitments made in the Project File Report or Environmental Study Report are fulfilled and are effective.** Monitoring of project operation may be necessary to ensure the effectiveness of the selected solution in resolving the problem. The results of the monitoring program shall be communicated to the public and review agencies, if requested.

A.2.7 Master Plans

The preceding section has addressed the planning and design process by which municipalities may plan municipal works on a project-by-project basis. It is recognized, however, that in many cases it is beneficial to begin the planning process by considering a group of related projects, or an overall system, (e.g., water, wastewater and/or transportation network), or a number of integrated systems, (e.g., infrastructure master plan), prior to dealing with project specific issues. By planning in this way, the need and justification for individual projects and the associated broader context, are better defined.

Master Plans are long range plans that integrate infrastructure requirements for existing and future land use with EA planning principles. These plans examine an infrastructure system(s) or group of related projects in order to outline a framework for planning for subsequent projects and/or developments over the long-term. This approach recognizes that there are real benefits in terms of better planning when long range comprehensive studies are undertaken over logical planning units, such as at the regional level, and that proponents who undertake such studies can build on the recommendations and conclusions contained in them. Additional explanatory information and sample notices are provided in Appendix 4.

Master Plans typically differ from project-specific studies in several key respects:

a) Long range infrastructure planning enables the proponent to comprehensively identify need and establish broader infrastructure options. The combined impact of alternatives is also better understood which may lead to other and better solutions. In addition, the opportunity to integrate with land use planning enables the proponent to look at the full impact of decisions from a variety of perspectives.

b) The scope of Master Plans is broad and usually includes an analysis of the system in order to outline a framework for future works and developments. Master Plans are not typically undertaken to address a site-specific problem.

c) Master Plans typically recommend a set of works which are distributed geographically throughout the study area and which are to be implemented over an extended period of time. While these works may be implemented as separate projects, collectively these works are part of a larger system. Master plans thus provide the context for the implementation or follow-up studies of the specific projects that make up the plan. Master Plan studies in essence conclude with a set of preferred alternatives and, therefore, by their nature, Master Plans will limit the scope of alternative which can be considered at a project specific level of assessment.

A.2.7.1 The Master Planning Process

The work undertaken in the preparation of Master Plans should recognize the planning and assessment process of the MCEA and should incorporate the key principles of successful planning identified in section A.1.1. It is imperative that public and agency consultation take place during each phase of the study process as outlined below.

Section 16 order requests pertaining to a master plan should identify the project(s) for which the concerns arise rather than referring to the Master Plan generally. Section 16 provides the minister with the authority to make an order with respect to an undertaking.

The Master Planning process must follow, at a minimum, the same steps of the first two phases of the MCEA process:

- Phase 1 – Problem or Opportunity
    - Identify and describe the problem or opportunity that the Master Plan is addressing (see section A.2.2);
    - *Notes for Master Plan studies (Phase 1): It is imperative that public, Indigenous Community and agency consultation take place at the initiation of the Master Plan Study so that the scope and purpose of the study is understood. As such, proponents must use the discretionary consultation point.*

- Phase 2 – Alternative Solutions
    - Identify alternative solutions to the problem/opportunity by taking into consideration the existing environment and establish the preferred alternative

solution taking into account public and review agency input. Then, document the Master Planning process (see section A.2.3).

- *Notes for Master Plan studies (Phase 2): Depending on the level of detail of the Master Plan study being undertaken, "alternative solutions" may only involve broader network alternative solutions, or it may also involve alternative solutions at a project specific level where appropriate/needed.*

Given the broad scope of Master Plans, there are infinite ways of conducting them. Various approaches are described below to guide proponents. Proponents can adapt and tailor the details of these approaches to best suit their needs, as long as the resulting approach is in keeping with the requirements of the MCEA process and the intent of its application. The onus is on the proponent to determine the preferred approach for the issues being addressed by the municipality.

Prior to commencing a Master Plan, proponents are urged to contact the Regional EA Coordinator at the ministry to discuss their proposed approach.

Approach #1 – Broad Master Planning where identified projects are subject to project specific requirements

Approach #1 involves the Master Plan being undertaken with a broad scope and level of assessment. This involves analysis on a regional or systems scale, which enables the proponent to identify needs and establish broader infrastructure alternatives and solutions. The inventory of the natural, social and economic environments which are to be considered when assessing the alternative solutions may also be broader/more general.

Specific projects that are required to achieve the preferred solution described in the Master Plan may be identified within the Master Plan document, however the level of detail at a project-specific level is minimal. Therefore, more detailed investigations at the project-specific level are required in order to fulfil the MCEA requirements for the specific Schedule B and C projects identified within the Master Plan. The Master Plan would therefore become the basis for, and be used in support of, future investigations for the specific Schedule B and C projects identified within it. For example, while the Master Plan may identify and recommend a series of transportation improvement projects, this would likely be done at a broad level, and additional work would be required to complete the MCEA process for the Schedule B or C projects (e.g., detailed inventory of the environment, impacts assessment and development of mitigation measures – all specific to a particular project). Please see Appendix 4 – "Master Plan Review and Updates" for more information on using the Master Plan as the basis for future investigations of Schedule B and C projects.

Documentation:

The Master Plan document would be prepared at the conclusion of the selection of broad preferred alternatives. A final public notice for the Master Plan (Notice of Master Plan) would be issued and the Master Plan document would be made available for public comment prior to being approved by the municipality.

To proceed with a Schedule B project identified in the Master Plan the Project File Report(s)

must be filed for public review to complete Phases 1 and 2 of the MCEA. For Schedule C projects, the proponent must complete the remaining components of Phases 1 and 2, and Phases 3 and 4 of the MCEA process, including filing an Environmental Study Report for review.

Approach #2 – Detailed Master Planning where identified Schedule B projects have completed the MCEA process but identified Schedule C projects are subject to project specific requirements

Approach #2 involves the Master Plan being undertaken with detailed assessment work to appropriately meet the requirements of Schedule B projects.

Specific projects that are required to achieve the preferred solution described in the Master Plan are identified within the Master Plan document. The level of investigation, consultation and documentation are sufficient to fulfil the requirements for the Schedule B projects identified within the Master Plan. For example, more detailed inventories of the natural, social and economic environments are prepared for the areas where specific Schedule B projects are proposed to be located as part of the Master Plan process. These detailed inventories should be considered in identifying and assessing project specific impacts and mitigation measures for each project. The project specific information (in addition to the general Master Plan information) should be consulted on during the Master Planning process and documented in the Master Plan document.

The Master Plan must at a minimum meet the requirements of Phase 1 and 2 of the MCEA for both Schedule B and C projects. The level of study completed for the Master Plan is not sufficient to fulfil the requirements for any Schedule C projects identified. The Master Plan would therefore become the basis for, and should be used in support of, future investigations for the specific Schedule C projects identified within it.

Documentation:

The Master Plan document would be prepared at the conclusion of Phases 1 and 2 of the MCEA process. The final public notice for the Master Plan would be the Notice of Completion for the Schedule B projects within it, and it must meet the requirements for a Notice of Completion, including providing notice of the opportunity to request a section 16 order. Information regarding section 16 order requests is in section A.2.8.

For any Schedule C projects identified in the Master Plan, the proponent would have to fulfil Phases 3 and 4 prior to filing an Environmental Study Report for review.

Approach #3 – Comprehensive Master Planning where the MCEA process has been completed for identified Schedule B and C projects

Approach #3 involves comprehensive assessment work being done to appropriately address Schedule B and C projects in the Master Plan.

Specific projects that are required to achieve the preferred solution described in the Master Plan are identified within the Master Plan document. The level of investigation, consultation and documentation are sufficient to fulfil the requirements for the Schedule B and C projects

identified within the Master Plan. For example, more detailed inventories of the natural, social and economic environments are prepared for the areas where specific Schedule B and C projects are proposed to be located as part of the Master Plan process. These detailed inventories should be considered in identifying and assessing project specific impacts and mitigation measures for each project. The Master Planning process would also include fulfilling all the relevant phases of the MCEA process. The project specific information (in addition to the general Master Plan information) should be consulted on during the Master Planning process and documented in the Master Plan document.

Documentation:
The Master Plan document would be prepared at the conclusion of Phase 4 of the MCEA process. The Master Plan documents all the relevant phases of the MCEA process for Schedule B and/or Schedule C projects. The final public notice for the Schedule B and C projects in the Master Plan would be the Notice of Completion, which must meet the requirements for the Notice of Completion, including providing notice of the opportunity to request a section 16 order.

Depending on the scope of the Master Plan, this approach would likely result in extensive documentation should the Master Plan include numerous Schedule C projects. The proponent should take this into consideration when determining the appropriateness of using this approach.

Modified Approach #2 or #3
As mentioned above, depending on the scope of the Master Plan, approach #2 or #3 may result in extensive documentation should the Master Plan include numerous Schedule B and/or C projects. Further, some projects may need to be implemented sooner than others. Accordingly, proponents may choose to complete a Master Plan following approach #2 or #3 for some of the identified projects but not for all.

For a Modified Approach #2, this would mean that the level of investigation, consultation and documentation are sufficient to fulfil the requirements for specific Schedule B projects identified within the Master Plan, but not all of them and not the Schedule C projects. The final public notice for the Master Plan would be the Notice of Completion for those specific Schedule B projects that had the detailed assessment completed and as such must meet the requirements of the Notice of Completion, including providing notice of the opportunity to request a section 16 order. The projects that have completed the process must be clearly identified in the Notice.

A Project File Report for the remaining Schedule B projects would be required to be filed for public review, and Phases 3 and 4 would need to be completed for the Schedule C projects prior to the Notice of Completion being issued for these projects.

For a Modified Approach #3, this would mean that the level of investigation, consultation and documentation are sufficient to fulfil the requirements for all Schedule B projects identified within the Master Plan, and some of the Schedule C projects, but not all of the Schedule C projects. The final public notice for the Master Plan would be the Notice of

Completion only for the Schedule B projects and specific Schedule C projects for which the detailed assessment has been completed. The Notice of Completion would be required to meet applicable requirements, including providing notice of the opportunity to request a section 16 order. Information regarding section 16 order requests is in section A.2.8**.** The notice must clearly identify the projects for which the MCEA process has been completed. Phases 3 and 4 for the remaining Schedule C projects would have to be completed prior to issuing the Notice of Completion for these projects.

These modified approaches are meant to provide flexibility to proponents to accommodate their needs, timing and resources. In following Modified Approach #2 or #3, it is very important that the proponent clearly communicate to the public, Indigenous Communities and stakeholders which Schedule B and/or Schedule C projects the Notice of Completion applies to, and which will be subject to further investigation through subsequent project specific Class EAs. A strong consultation/communication plan is advised.

Integration with the *Planning Act*

Given the broad scope of Master Plans, it may be appropriate to integrate with approvals under the *Planning Act.* For example, the preparation of a new official plan or a comprehensive official plan amendment could be accompanied by Master Plans for water, wastewater and/or transportation. When these planning documents are prepared simultaneously, alternatives can be assessed taking into account land use and servicing issues while addressing a preferred alternative which minimizes, to the extent possible, the impact on the community, natural environment and the economy. Often the range of alternatives that can be assessed for servicing are greater because the land use plan has not been finalized. This approach is best suited when planning for a significant geographical area in the long term where interdependent decisions which impact servicing and land use are being made and the range of servicing alternatives needs to be addressed in an integrated fashion in order to recommend the best overall solution for the community.

The integrated approach still involves the completion of the procedural requirements of the MCEA, however proponents can reduce duplication by simultaneously complying with *Planning Act* and MCEA processes using shared notification, consultation, studies, technical reports and documentation opportunities. Essentially both processes may be satisfied at the same time using some of the same information/studies/documentation, as along as the level of detail and assessment completed appropriately captures the requirements of both processes.

For Master Plans that are integrated with a Planning Act approval, the proponent should clearly identify which Master Plan approach it is following i.e., approach 1, 2 or 3. When choosing the appropriate approach, the proponent should carefully consider factors such as:

- the objective/purpose of the Master Plan (e.g., broad plan that identifies projects needed to service development and provides the support for future investigation to fully confirm project specific recommended solutions (approach 1) or a plan that would study and determine the preferred alternatives for the identified projects and complete MCEA requirements in order to proceed to implementation (approach 2/3);

- complexity of the Master Plan (e.g., number of projects identified; is there sufficient detail at this stage to fulfil the level of assessment required for Schedule B/C project); and
- timing of infrastructure needs (e.g., do any of the project need to be implemented immediately or in the short term)

More information on the integrated approach and fulfilling the requirements under both the Planning Act and the MCEA are in section A.2.9.

A.2.7.2 Master Plan – Lapse of Time

Master Plans are long-term plans that will likely be implemented over many years. In order to meet the requirements of the MCEA, a Notice of Completion for each of the identified Schedule B and C projects must be issued. There is no lapse of time limit on a Master Plan. The lapse of time applies to the identified projects (see section A.4.1.1 and A.4.3).

If only some of the planning process for the projects identified in the Master Plan (i.e., Approach 1 or 2) has been completed and there has been a delay in completing the remaining requirements of the MCEA or a change in the environment, the proponent must update the work done to date to ensure accuracy and must use current information to complete the MCEA process for those projects.

It is recommended that proponents review and update (amend) their Master Plans on a regular basis. Regular updates will permit the proponent to simply reference the complete and current information in the Master Plan when proceeding with completion of the Class EA process for a project.

A.2.8 Section 16 Orders

The EAA as amended through the *COVID-19 Economic Recovery Act, 2020,* provides the Minister (or delegate) with the authority to make two types of orders with respect to an undertaking proceeding in accordance with a Class EA.

The following summarizes the Minister's (or delegate's) authority under section 16 and 16.1 of the EAA, and the prohibitions in s.15.1.1. To the extent that there is a conflict between what is set out below and the provisions in the EAA, the provisions in the EAA prevail. The Minister (or delegate) may order a proponent, before proceeding, to undertake an individual EA or may impose conditions on the undertaking.

<u>Section 16(1) and 16(3) Orders</u>
The Minister (or delegate) may, on their own initiative, within a time limited period, require a proponent to undertake an individual EA, referred to as a s.16(1) order, or impose conditions on an undertaking, referred to as a s.16(3) order.

If the Minister (or delegate) is considering making an order on their own initiative, the Minister must make the order no later than 30 days after the end of the comment period set out in the Notice of Completion or Notice of Addendum, unless a Notice of Proposed Order

is provided to the proponent. If the Director provides a Notice of Proposed Order to the proponent within the 30-day period, the Minister must make the order within 30 days of the Director's notice being provided to the proponent unless the notice also includes a request for information.

If the Notice of Proposed Order includes a request for information, the proponent must provide that information to the Director within the deadline contained in the notice. When received, the ministry will review the information and if the Director is satisfied that the submitted information meets the request, the Director will notify the proponent (Notice of Satisfactory Response). The Minister (or delegate) will then have 30 days to make an order. In this case, the following are the outcomes:

- If the Minister (or delegate) issues a s.16(1) order, the proponent cannot proceed with the project without first seeking and obtaining approval under Part II of the Act (i.e., individual EA).
- If the Minister (or delegate) issues a s.16(3) order, the proponent must meet the conditions outlined in the order.
- If the Minister (or delegate) does not issue an order within 30 days of the Director giving a Notice of Satisfactory Response, the proponent can proceed with their project.

If the Director is not satisfied with the information provided (the proponent fails to provide the information requested within the timeline provided in the Director's notice or the information is not complete), the Director will issue a Notice of Unsatisfactory Response and the proponent will be required to issue a new Notice of Completion or Notice of Addendum. The new Notice of Completion (or Addendum), providing for a new comment period of at least 30 days, must be issued within the time period and following any directions specified by the Director in the notice (e.g., post information to the proponent's website). In addition, the information specified in the Notice of Unsatisfactory Response must be provided to the Director for review. If the Director is satisfied with the information provided to the ministry with the new Notice of Completion or Addendum, the Director will issue a Notice of Satisfactory Response. Once the Notice of Satisfactory Response is given, the Minister (or delegate) will have 30-days to issue an order if the Minister (or delegate) chooses to do so. In this case, the following are the potential outcomes:

- If the Minister (or delegate) issues a s.16(1) order, the proponent cannot proceed with the project without obtaining approval under Part II of the Act (i.e., an individual EA).
- If the Minister (or delegate) issues a s.16(3) order, the proponent must meet the conditions outlined in the order.
- If the Minister (or delegate) does not issue an order within 30 days of the Director giving a Notice of Satisfactory Response, the proponent can proceed with their project.

However, if the Director remains unsatisfied with the information provided when a new Notice of Completion (or Notice of Addendum) is issued or the proponent continues to not provide the requested information, the Director will issue another Notice of Unsatisfactory Response, thereby requiring the proponent to again issue a new Notice of Completion (or

Notice of Addendum) in accordance with any directions specified by the Director and provide the requested information to the Director.

Requests for s.16 orders on the grounds that the order may prevent, mitigate or remedy adverse impacts on Aboriginal and treaty rights

In addition, the EAA allows a person with concerns pertaining to potential adverse impacts to Aboriginal or treaty rights, that have not been addressed through the Class EA process to request under section 16 of the EAA that the Minister make an order requiring an individual EA) or that conditions be imposed on the project. A request can only be made on the grounds that the order may prevent, mitigate or remedy adverse impacts on Constitutionally protected Aboriginal or treaty rights. Requests that are not made on these grounds will not be considered by the Minister. If a section 16 order request is received by the Minister, the proponent shall not proceed with their project until a decision is made by the Minister on the request, or the ministry notifies the proponent that they may proceed.

The proponent of an undertaking proceeding in accordance with the MCEA shall provide accurate and detailed information on the section 16 order request process to the public and to Indigenous Communities. At a minimum, proponents must include information on the s.16 order request process in the Notice of Completion and any Notice of Addendum. The information in the notices should include what the grounds for a request must be (i.e., that the order may prevent, mitigate or remedy adverse impacts on Constitutionally protected Aboriginal or treaty rights), how to submit a request for a section 16 order, and, timing for the public comment period, and information that must be submitted to the ministry in making a request. This includes:

a. requester contact information, including full name;
b. project name;
c. proponent name;
d. the type of order that is being requested (requiring an individual EA approval before being able to proceed, or that conditions be imposed on the project);
e. specific reasons on how an order may prevent, mitigate or remedy potential adverse impacts on Aboriginal and treaty rights;
f. information about efforts to date to discuss and resolve concerns with the proponent; and
g. any other information in support of statements in the request.

If a request for a section 16 order is received by the ministry, that meets the grounds in section 16(6), the ministry will contact the proponent for a response to the concerns raised in the section 16 order request. The proponent must respond in a timely manner with complete information.

For more information on the section 16 order process, please visit:
https://www.ontario.ca/page/class-environmental-assessments-section-16-order

A.2.9 Integration with the *Planning Act*

There may be circumstances where a proponent (including private developers) may have a *Planning Act* application and MCEA requirements at the same time. For example, an application for a plan of subdivision may trigger the need for a new collector road. When this occurs, the ministry strongly encourages proponents to consider the *Planning Act* and Class EA processes together in an integrated approach in order to avoid duplication and ensure improved environmental protection. The MCEA recognizes the desirability of coordinating or integrating the planning processes and approvals under the EAA and the *Planning Act*, as long as the intent and requirements of both acts are met.

The types of *Planning Act* applications/documents that may proceed using the integration approach include for example: an official plan, official plan amendment including secondary plans adopted as an official plan amendment, community improvement plan and plans of subdivision. A municipality is responsible for developing its official plan and any secondary plans including any official plan amendments or a community improvement plan. However, applications/documents such as a plan of subdivision or an official plan amendment may be initiated by a private sector developer. By completing the requirements for the MCEA and land use planning processes at the same time, proponents can streamline their efforts and more effectively meet the requirements of both the *Planning Act* and EAA.

A.2.9.1 – A.2.9.4 – There may be circumstances where a proponent (including private developers) is required to submit a *Planning Act* application that includes a project(s) that is an undertaking that is subject to the EAA. For example, an application for a plan of subdivision may include a new collector road. In this case, the ministry encourages proponents to consider the *Planning Act* and MCEA processes together in an integrated approach in order to determine whether any work can be shared between the EAA and *Planning Act* processes to avoid some duplication and ensure improved environmental protection. The MCEA recognizes the desirability of coordinating or integrating the planning processes and approvals under the EAA and the *Planning Act*, as long as the intent and requirements of both acts are met.

A.2.9.1 Integrated Approach Overview

The integrated approach provides proponents with the opportunity to reduce duplication by simultaneously complying with the *Planning Act* and MCEA processes, where possible. For example, proponents could use the same public/stakeholder notification and consultation, technical reports and analyses, and land use planning and environmental protection decisions for both the *Planning Act* approval and the MCEA, as long as the level of detail and assessment completed for those shared opportunities appropriately captures the requirements of both processes.

The integrated approach still involves the completion of the procedural requirements of the MCEA based on whether the project is classified as a Schedule B or Schedule C project. If the project is defined as a Schedule B project, the proponent must complete Phases 1 and 2 of the MCEA. If the project is categorized as a Schedule C project, the proponent is required to complete Phases 1 through 4 of the MCEA. All MCEA planning principles and mandatory consultation requirements still apply.

Work completed by the proponent for each of the applicable Phases of the MCEA must be documented in a publicly available Project File Report or Environmental Study Report to meet the requirements of the MCEA and can be used as a supporting document for the *Planning Act* application. The Project File Report or Environmental Study Report must be prepared in accordance with section A.2.9.4 of the MCEA and must demonstrate how the proponent has satisfied the requirements for each of the Phases in the MCEA required to be completed while addressing infrastructure servicing needs for their *Planning Act* application(s) and their respective requirements.

Under the *Planning Act*, decision(s) made under that act may be appealed to the Ontario Land Tribunal (OLT). The OLT is the adjudicative tribunal to which appeals of land use planning decisions, including the supporting infrastructure, can be made.

As outlined in section 2.8 of the MCEA, a section 16 order request may also be made to the Minister with respect to the projects proceeding through the MCEA process.

A.2.9.2 Who Can Use the Integrated Approach

The proponent of a project using the integrated approach is the same as the applicant under the *Planning Act,* whether the proponent is a municipality, a private sector developer or both. Two or more municipalities and/or private sector developers may act as co-proponents.

Private Sector Proponent
Private developers are designated as subject to the requirements of the EAA if a private sector developer is proposing an undertaking of a type listed in Schedule C in the 2000 version of the MCEA and the undertaking involves the provision of roads, water or wastewater facilities for the residents of a municipality.

Municipalities should not avoid their EAA requirements through the use of conditions on a *Planning Act* approval where the appropriate proponent for the work is the municipality.

Co-Proponency

- Two or more parties may have responsibility for the same project (either different municipalities or private sector developers or a combination of two or more). Where two or more proponents undertake a project for their mutual benefit, as co-proponents, all terms and conditions of the MCEA shall apply equally to each of the co-proponents.

- Proponents can also change during the planning and implementation of a project. Initial MCEA Phases are typically completed by the municipality and following Phases may be completed by another proponent. For example, a municipality may use a Master Plan to complete Phases 1 and 2 of the MCEA process, while a private sector proponent, building upon the work completed by the municipality, completes Phases 3 and 4 of the MCEA process through the standard MCEA process or through the use of the integrated approach. If a proponent is relying on work completed by another proponent to fulfill their requirements under the MCEA, the proponent needs to ensure that the work that is being relied upon meets the requirements of section A.2.9.3 and that they are able to make use

of the work completed by the other proponent. There may be restrictions on the use of previous work by others (e.g., copy right or age of the information).

A.2.9.3 Steps in the Integrated Approach

The following section provides a step-by-step guide of the Class EA requirements for proponents planning a project using the integrated approach. Proponents should match up Planning Act approval requirement steps with the MCEA requirement steps to identify opportunities to reduce duplication and coordination timing of both processes:

Step 1:

- Identify the problem or opportunity.

Step 2:

a) Identify alternative solutions to the problem or opportunity.
b) Carry out an inventory of the environment, including the natural, social, cultural, built and economic environment.
c) Identify the potential impacts of the alternative solutions on the environment and any measures needed to mitigate those impacts.
d) Carry out a comparative evaluation of the alternative solutions and identify a preliminary preferred solution.
e) **Mandatory Point of Consultation –** notify and consult with review agencies, Indigenous Communities and the public as described in section A.3 of the MCEA.
f) Determine the preferred alternative solution (project) based on the results of the comparative evaluation and feedback received from review agencies, Indigenous Communities and the public.
g) Key Decision Point - At this point in the process, the proponent must confirm the applicable MCEA Schedule for the preferred solution (project):
    - If the Project would have been defined as a Schedule B project under the MCEA, then the proponent must:
        - document the study process and description of the physical location and dimensions of the project in a public document. Documentation must be consistent with the requirements in section A.2.9.4 (Documentation) of the MCEA;
        - issue a Notice of Completion to Indigenous Communities, review agencies, and the public about the availability of the study documentation for review, section 16 order requests, as well as the appeal rights under the *Planning Act*; and
        - proceed to Phase 5 of the MCEA below.
    - If the Project would have been defined as a Schedule C project under the MCEA, then the proponent must:
        - Proceed with Phases 3, 4 and 5 of the MCEA below.

Step 3:

a) Identify alternative design concepts for the preferred solution (project).
b) Undertake a detailed inventory of the environment, including the natural, social, cultural, built and economic environments.

c) Identify the potential impact of the alternative project designs on the environment and any measures needed to mitigate those impacts.
d) Carry out a comparative evaluation of the alternative project designs and identify a recommended project design.
e) **Mandatory Point of Consultation** - notify and consult review agencies, Indigenous Communities and the public as described in sections A.3, A.3.5.3, A.3.6 and A.3.7 of the MCEA.
f) Determine the preferred design for the project.

Step 4:

a) Document the integrated approach, including the problem or opportunity, alternative solutions, alternative project design concepts, preferred project designs, preferred design of the project, consultation and decision-making process using section A.4 as a guide. Documentation must include a description of the proposed project including the physical location and physical dimensions of the project.

b) **Mandatory Point of Consultation (e.g., Issue Notice of Completion) –** issue Notice of Completion to review agencies, Indigenous Communities and the public. The Notice of Completion must include information about the availability of the study documentation for public review and section 16 order requests, and information required by the *Planning Act*, including appeal rights under the *Planning Act*.

   Documentation and supporting technical reports must be provided to review agencies as required. Section A.2.9.4 provides further information regarding documenting the integration process.

Step 5:

- Once integrated planning process as described in section A.2.9.3 is complete, the proponent may proceed to implement the project. It is the responsibility of the proponent to ensure that they have fulfilled all of the *Planning Act* and EAA requirements for their project and obtained any other necessary approvals or permits prior to implementing the project.

A.2.9.4 Documentation

The MCEA documentation must be prepared and made available to the public and shall include:

- a statement of the purpose, problem or opportunity;
- details of the planning process followed;
- details of the consultation carried out;
- existing environmental conditions;
- alternative solutions and evaluation of its potential environmental effects;
- the preferred solution and its effects on the environment;
- the mitigation measures to be implemented; and

- commitments made during the planning and consultation process.

(See section A.4 as a guide)

The MCEA documentation including its supporting technical reports must be provided to review agencies for their review and comment as required. Where studies are necessary to support the decisions made, the feasibility of the preferred alternative, and the conclusions drawn about environmental impacts and mitigation measures, these technical studies must be provided to the review agencies at an early stage in the integrated planning process as requested. Examples include hydrogeological studies for communal groundwater supply or a noise study for a new or widened roadway. It is further recommended that proponents consult with review agencies early in the process to determine any requirements and/or site-specific information that should be provided in the relevant studies.

As a reminder, proponents can use the same technical studies and documentation for both the *Planning Act* approval and the MCEA, so long as the requirements of both processes are met. For example, a document that is to be used for both processes must contain all the information requirements of the *Planning Act* approval and all the information requirements of the MCEA. This approach may result in a slightly longer single document versus two separate documents that may contain mostly duplicative information in both.

A.2.9.5 Project Notifications

Requirements remain the same as outlined in sections A.3.4, A.3.5.3, A.3.6 and A.3.7 of the MCEA. Consultation including, notification requirements, is the responsibility of the proponent. Under the *Planning Act*, municipalities are required to issue Notices of Public Meetings and Notices of Decision.

Tasks such as public meetings and public notices may be combined under the MCEA and the *Planning Act.* In some cases, final notices may also be coordinated, depending on the timing and alignment of *Planning Act* decisions with the MCEA work. While the content of combined notices will vary according to the type of *Planning Act* application and the requirements of the MCEA, these combined notices must, at a minimum, include the following:

- a clear statement that an integrated approach is being used;
- a clear statement that an appeal of the Planning Act application and related infrastructure is to be made to the OLT and that a section 16 order request may be made to the Minister of the Environment, Conservation and Parks;
- information about the municipal infrastructure to which the MCEA applies, and the type(s) of *Planning Act* approval being sought; and
- required information that shows that all applicable legislative and regulatory notice requirements under the *Planning Act* and the MCEA have been met.

In using the integrated approach, information contained in the notices may differ, based on the specific notice requirements for the type of *Planning Act* process being carried out and the Schedule of the MCEA project. These differences may relate to factors such as: timing; distribution; content; format; and author.

Appendix 7 highlights some of the key considerations that need to be taken into account when preparing combined notices. For example, comment periods differ for *Planning Act* and MCEA processes. The MCEA requires a Notice of Completion be given and documentation made available for a minimum 30-day comment period. In the case of an official plan amendment under the *Planning Act*, a copy of the application and related information and material must be made available for public inspection at least 20 days before holding a public meeting. When combining notices to meet the requirements under the MCEA and the *Planning Act,* the proponent must ensure that both requirements are met. For projects being planned using the integrated approach, once all of the requirements of the MCEA are completed including the section 16 process (section A.2.9), then under the MCEA the proponent can proceed with project implementation subject to the *Planning Act* application and any other relevant permits and approvals being obtained.

A.2.9.6 Considerations when using the Integrated Approach

A.2.9.6.1 Project Boundaries

Projects being planned using the integrated approach can include infrastructure that is located on lands beyond the boundaries of the lands that are the subject of the specific *Planning Act* application provided that the need for the infrastructure is triggered by the project being planned. Any infrastructure extending beyond the *Planning Act* application boundaries must be directly related to and required by the application(s).

For example, a *Planning Act* application for a plan of subdivision may have a requirement to service the subdivision through a connection to an off-site water tower or stormwater management facility. Another example would be if an extension to a collector road is needed for a short distance beyond the area involved in the *Planning Act* application to connect the subdivision to the existing road network. In this instance, infrastructure located beyond the boundary of the *Planning Act* application would be subject to EAA requirements for the municipality. To ensure that municipal requirements under the MCEA are met, the municipality has at least three options:

1. participate as a co-proponent in the integrated project and incorporate the off-site infrastructure into that same integrated project;

2. authorize the proponent of the integrated project to carry out the MCEA work for the off-site infrastructure on their behalf (subject to their approval) either as part of the integrated project; and

3. carry out an independent MCEA for the off-site infrastructure.

When a project extends beyond the *Planning Act* application boundaries the associated investigations and EA documentation also needs to extend beyond the *Planning Act* application boundaries. Existing conditions and environmental effect boundaries, for example would need to be expanded appropriately beyond the *Planning Act* application boundary.

As noted in section A.2.9.2, municipalities should not avoid their MCEA requirements through the use of conditions on a *Planning Act* approval where the appropriate proponent for the work is the municipality. Off-site infrastructure should only be a requirement of a *Planning Act* application if the infrastructure is directly related to the project.

Notice for a project being planned using the integrated approach must clearly identify all infrastructure outside the boundaries of lands that are the subject of the specific *Planning Act* application and the boundaries of the area of land affected by both the prescribed notice and the proposed infrastructure itself. Recognizing that this may not be possible at the earliest stages of project planning when the need for specific infrastructure may not yet have been determined, the level of information included in the notices should increase as project planning decisions are made.

The proponent must address all required phases for the project under the MCEA, including any infrastructure located outside the boundaries of the lands that are the subject of the specific *Planning Act* application in the documentation required under section A.2.9.4.

A.2.9.6.2 Revisions to a Project Planned Using the Integrated Approach

It may be necessary to revise a project that has been planned using the integrated approach due to environmental implications of changes to the project or due to a delay in implementation. Changes to a project must be made following the addenda procedures outlined in the MCEA (refer to section A.4.1.1 and A.4.3).

A.2.9.6.3 Lapse of Time

If a proponent planning a project using the integrated approach has fulfilled its requirements under the Planning Act and EAA, the project will be subject to the review requirements associated with the Planning Act approval and not the time lapse provision set out in the MCEA. The Planning Act does not contain an automatic review of an approval or an automatic expiry if a Planning Act approval is not implemented. A municipality may, however, include a time lapse provision in certain *Planning Act* approval(s) (e.g., a municipality may provide a deadline for the proponent to fulfill the conditions of a draft plan of subdivision) and/or seek reconsideration of matters through its regular planning reviews.

A.2.9.6.4 Consideration

By considering Class EA and land use planning processes in a coordinated approach, proponents may be able to streamline their efforts and more effectively meet the requirements of both the *Planning Act* and EAA. Proponents need to consider the project schedule, timing of the *Planning Act* applications, completion of any studies, public, Indigenous Community and stakeholder interest and implementation target dates, amongst other factors.

It is also possible to terminate an integrated approach once the process has been initiated, if during the course of the project, considerations suggest that two separate processes may be more effective. Work undertaken prior to this decision does not need to be redone as it was undertaken with the intent of meeting both acts. However, future work must still meet the requirements of the MCEA, and the *Planning Act* approvals process being used. If

termination of an integrated approach occurs following the announcement or public notification of a project having been given, subsequent notices, or independent notices, shall be issued advising that an integrated approach is no longer being followed.

If a proponent, intends to give notice changing from a standard MCEA process to an integrated approach, notification of the change in process shall be made to the public, Indigenous Communities, and stakeholders involved in the process including the ministry and MMAH.

A.2.9.7 Monitoring the Application of the Approach to Integrate with the Planning Act

All notices of commencement and completion, including those for projects or Master Plans following the integrated approach and any notices of public meetings following the integrated process are required to be submitted to the ministry (per section A.1.5.1). This system will track the number of projects following the integrated approach.

A.2.10 Application of Other Legislation

The MCEA process can be conducted in such a way as to support compliance with other environmental legislation. The MCEA process, however, does not replace or exempt the project from other applicable federal, provincial and municipal legislation and municipal by-laws, such as permits or approvals and the specific public, Indigenous Community and agency consultation that they may require. Where possible, duplication between the MCEA process and other formal approval processes should be avoided.

This section is not intended to be an exhaustive list of approvals that may be required for project. It is well beyond the scope of this document to outline all the potential legislation and requirements of municipal projects. It is the responsibility of the proponent to ensure that all approval and permitting requirements are met prior to implementation. Furthermore, good project management will endeavor to do this in a streamlined and efficient manner in order to minimize duplication where possible.

The relationship to the following provincial legislation is discussed in the following sections:

- *Planning Act* — see section A.2.9
- *Municipal Act, 2001* — see section A.2.10.1
- *Ontario Water Resources Act*, *Environmental Protection Act*, and the *Safe Drinking Water Act, 2002* — see section A.2.10.2
- Consolidated Hearings Act — see section A.2.10.3
- O. Reg 586/06 (*Local Improvement Charges*) made under the *Municipal Act, 2001* — see section A.2.10.4
- *Drainage Act* — see section A.2.10.5
- *Clean Water Act, 2006* — see section A.2.10.6
- *Endangered Species Act, 2007* — see section A.2.10.7
- O. Reg. 231/08 (Transit Projects and Metrolinx Undertakings) made under the EAA — see section A.2.10.8

Other key provincial plans, policies, regulations, and legislation include:

- *Conservation Authorities Act*
- Provincial Policy Statement (PPS);
- *Oak Ridges Moraine Conservation Act, 2001*, and the Oak Ridges Conservation Plan (2017);
- *Ontario Safe Water Drinking Act, 2002* and its regulations;
- *Nutrient Management Act, 2002* and its regulation;
- *Niagara Escarpment Planning and Development Act* and Niagara Escarpment Plan;
- *Greenbelt Act, 2005* and the Greenbelt Plan (2017);
- *Places to Grow Act*, 2005 and the Growth Plan for the Greater Golden Horseshoe;
- *Ontario Heritage Act* and its regulations;
- *Clean Water Act, 2006* and its regulations;
- Great Lakes – St. Lawrence River Basin Sustainable Water Resources Agreement
- *Safeguarding and Sustaining Ontario's Water Act, 2007;*
- *Lake Simcoe Protection Act, 2008* and the Lake Simcoe Protection Plan;
- *Water Opportunities Act, 2010;*
- O. Reg. 101/07 (Waste Management Projects) made under the EAA.

Also, proponents should be aware of the following:

- Section 3.3(1) of the Ontario EAA removes traffic calming from being subject to the Ontario EAA
- O. Reg. 116/01 (Electricity Projects) made under the EAA exempts standby power;
- Reg. 334 made under the EAA (General) exempts projects not included in the class of undertakings in the MCEA if < $3.5m
- O. Reg. 345/93 (Designation and Exemption – Private Sector Developers) made under the EAA designates certain projects by private sector developers

Municipal projects must also comply with the requirements of the federal Impact Assessment Act (IAA) where applicable. In addition, some federal acts are relevant to municipal projects including:

- *Fisheries Act* (see section A.2.10.10)
- *Canadian Navigable Waters Act* (see section A.2.10.11)
- *Species at Risk Act* (see section A.2.10.12)

For projects being planned under the MCEA, approval can only be issued <u>after</u> the end of the comment period outlined in the Notice of Completion or Notice of Addendum and any statutory waiting periods.

If a request for a section 16 order is received, or if the Minister takes steps to issue an order on their own initiative (see Section A.2.8), the approval can be issued only after the Minister has made a decision whether to issue a section 16 order.

Proponents will be required to demonstrate they have completed the MCEA process when submitting applications under other legislation. Proponents are requested to provide copies

of Notices of Completion and confirm that no section 16 orders (formerly known as Part II Order requests) are outstanding.

A.2.10.1 *Municipal Act, 2001 / City of Toronto Act, 2006*

The *Municipal Act, 2001* sets out the powers of municipalities and the division of responsibilities in all municipal systems. It provides the authority under which municipalities may operate. Proponents are urged to co-ordinate requirements under the EAA and the Municipal Act where possible and appropriate, for example, public notification.

The *City of Toronto Act, 2006* is a permissive legislative framework created for the City of Toronto that provides the city with broader powers to pass by-laws on matters ranging from health and safety to the city's economic, social and environmental well-being.

A.2.10.2 *Ontario Water Resources Act / Environmental Protection Act / Safe Drinking Water Act, 2002*

The *Ontario Water Resources Act* (OWRA) requires that an approval to use, operate, establish, alter, extend or replace new or existing municipal sewage works be obtained. Certain other sewage projects (e.g., processed organic waste, biosolids management activities including biosolids disposal and utilization) require approval under the *Environmental Protection Act* (EPA).

A municipal drinking water licence and drinking water works permit are required under the *Safe Drinking Water Act*, 2002 (SDWA) to establish, operate and alter or extend a municipal residential drinking water system.
The EAA and, hence, the MCEA process is oriented towards the general planning decisions associated with the development of a project. Water and wastewater facilities involve relatively complex technology, and for this reason engineering decisions must be reviewed in greater detail than the scrutiny normally afforded by EAA review of engineering issues. **Technical consultation with the Ministry of the Environment, Conservation and Parks is recommended for all complex projects involving construction of water supply and treatment, and sewage treatment and disposal systems.**

In addition, other approvals, legislation, policies and guidelines may apply. In most instances, stormwater management projects may require approval from any or all of the following: local municipality, local conservation authority, federal Department of Fisheries and Oceans, Ministry of Natural Resources and Forestry, and the Ministry of the Environment, Conservation and Parks. The MCEA process does not relieve proponents from the responsibility to meet all such requirements; rather, it presents an opportunity to identify the appropriate approval agency early in the process and to co-ordinate these requirements in a systematic manner.

A.2.10.3 *Consolidated Hearings Act*

A MCEA project whose status is changed to an individual EA, may become subject to hearings under several provincial statutes. For example, hearings might be required:

- under the **EAA**
- before the OLT, to allow the municipality to enter into debt financing

- under the ***Planning Act***, e.g., where an Official Plan (or amendment) has been referred to the OLT by the Minister of Municipal Affairs and Housing or a delegated authority, or where a related zoning by-law has been appealed to the OLT
- under the ***Expropriations Act*** to acquire land or property

In this event the proponent may combine the hearings under the *Consolidated Hearings Act*, under which all issues are dealt with at one hearing.

A.2.10.4 Ontario Regulation 586/06 (Local Improvement Charges) made under the *Municipal Act, 2001*

Previously, municipal works pursuant to the *Local Improvement Act* were Schedule A projects under the MCEA. The *Local Improvement Act* has essentially been replaced by Ontario Regulation 586/06. Accordingly, projects planned and approved under this Regulation are considered to be exempt projects under the MCEA. It should be noted that in many cases a petition from adjacent property owners is required prior to implementation. Where there are significant public concerns, the municipality may conclude to proceed under the MCEA.

A.2.10.5 *Drainage Act*

Drainage works regulated under the *Drainage Act* are exempt from the Ontario EAA.

A.2.10.6 *Clean Water Act,* 2006

The purpose of the *Clean Water Act, 2006* (CWA) is to protect existing and future sources of municipal drinking water. For information about the CWA and drinking water source protection, please visit Ontario.ca: http://www.ontario.ca/pages/source-protection.

Source protection plans set out the local approach to protecting sources of drinking water in a source protection area. Where an activity poses a risk to drinking water, policies in the local source protection plan may impact how that activity is undertaken.

In accordance with the CWA, four types of **vulnerable areas** have been delineated in source protection areas. These vulnerable areas are known as a Wellhead Protection Areas (WHPAs), surface water Intake Protection Zones (IPZs), Highly Vulnerable Aquifers (HVAs) and Significant Groundwater Recharge Areas (SGRAs). In addition, portions of the vulnerable areas may include Issues Contributing Areas (ICAs) and Events-based Areas (EBAs).

Policies may prohibit certain activities, or they may use certain tools to manage these activities. Municipal Official Plans, planning decisions, MCEA projects (where a project includes a drinking water risk) and prescribed instruments (environmental compliance approvals, permits to take water, and some aggregate permits and licenses) must conform with policies that address significant risks to drinking water and must have regard for policies that address moderate or low risks.

The Source Protection Information Atlas is a mapping tool available on Ontario.ca that can be used to determine whether a project would be in a source protection area and whether it

would be in one of the four types of vulnerable areas. Details regarding the location of vulnerable areas and any applicable policies are available in approved Source Protection Plans available on Conservation Authority/Source Protection Authority websites.

Proponents undertaking a MCEA project must identify early in their process which source protection area(s) the project is occurring in and whether a project is, or could potentially be, occurring within a vulnerable area; this would fall within Phase 1 of the MCEA process and must be clearly documented in the Project File Report or Environmental Study Report, as may be appropriate. For example, reports should identify which source protection area(s) the project is in, whether it is in a vulnerable area and identify any policies that could potentially apply to the project.

Projects Located Within a Vulnerable Area:
Projects being proposed in a vulnerable area may pose a risk to drinking water and may be subject to policies in a source protection plan. When projects are proposed within a vulnerable area, the policies in source protection plans must be considered and the impact of the policies on those who may need to implement the policies or those who are otherwise impacted (e.g., landowners) should be given adequate consideration during the planning stage.

Projects that create new or amended vulnerable areas:
For any proposed projects that alter or result in new vulnerable areas, the vulnerable areas will have to be incorporated into updated Source Protection Plans/Assessment Reports.

Examples of such projects include but are not limited to municipal well or surface water intake (i.e., changes to existing or new source of drinking water), new storm sewersheds due to new development (which can expand an intake protection zone). When this happens, landowners within new or amended vulnerable areas (IPZs or WHPAs) will be subject to source protection plan policies. These policies may impact existing or proposed land uses and the activities carried out by landowners. To fully understand the impact of establishing a new or expanded drinking water systems, **it is recommended that the technical work required by the CWA to update the vulnerable areas and potential drinking water threats be undertaken concurrently with the MCEA process.** This will facilitate the assessment of potential impacts and allow a more comprehensive consultation process with potentially affected stakeholders. Coordinating this work will also expedite Source Protection Plan/Assessment Report amendments to incorporate the new system or any changes to existing systems that may be required. It will also minimize the likelihood of MCEA proponents having to amend completed MCEA projects to reflect the technical work required by the CWA.

For further information on source protection requirements, the proponent should contact source protection staff at the local Source Protection Authority or Source Protection Region.

A.2.10.7 *Endangered Species Act, 2007*

The *Endangered Species Act, 2007* (Endangered Species Act) provides for the protection of species that are listed as endangered, threatened, or extirpated and their habitat.

The purposes of the *Endangered Species Act* are to:

- identify species at risk based on the best available scientific information, including information obtained from community knowledge and Aboriginal traditional knowledge;
- protect species that are at risk and their habitats, and promote the recovery of species that are at risk; and,
- promote stewardship activities to assist in the protection and recovery of species at risk.

Avoiding impacts to species at risk and their habitat is an integral part of protection and recovery. Where activities may have impacts that cannot be avoided, an authorization in the form of a permit or an agreement or compliance with a regulatory provision (which in some cases requires registration with the ministry) can allow those activities to occur under certain conditions (e.g., creating and following a mitigation plan, providing beneficial actions for a species).

Proponents are responsible for determining if their undertakings will impact species at risk and/or their habitat. It is expected that during the MCEA process, proponents will carry out the necessary work to identify species at risk and their habitat on and near the undertaking site and assess the impacts to species at risk that the undertaking may cause. This enables the identification of any Endangered Species Act requirements as part of the proposed undertaking. This includes:

- identification of what authorization may be applicable (i.e., permit, agreement or eligible regulatory exemptions);
- consideration of alternatives that avoid impacting species at risk;
- identification of mitigation actions that minimize impacts, when required; and
- identification of overall benefit actions.

For additional information on requirements for Endangered Species Act authorizations, proponents can consult the ministry's website at https://www.ontario.ca/page/how-get-endangered-species-act-permit-or-authorization or contact the ministry at SAROntario@ontario.ca.

A.2.10.8 Ontario Regulation 231/08 – (Transit Projects and Metrolinx Undertakings) made under the EAA (Transit Regulation)

The Transit Regulation exempts proponents of all public transit projects from the requirements under Part II and Part II.1 of the EAA and creates a process that certain projects (those set out in Schedule 1 to the regulation) must follow in order to be exempt the "transit project assessment process" outlined in the regulation. If a transit project is not listed in Schedule 1 of the regulation, it is exempt from EAA requirements and may proceed subject to any other required approvals.

The transit project assessment project is a proponent-led, self-assessment process and does not require Minister and Cabinet approval. Timelines have been prescribed for the

transit project assessment process that pertain to both public proponents and the Minister. The process starts with a defined project. The transit regulation includes requirements for consultation including notification, studies, assessing the potential impacts that a transit project may have on the environment, and documentation of this work through the preparation of an Environmental Project Report. There is an opportunity under the process to submit an objection to the Minister. The Minister may only require further consideration of the transit project (including requiring an individual EA) or impose conditions if the project may have a negative impact on a matter of provincial importance that relates to a natural environment or cultural heritage value/interest or a constitutionally protected Aboriginal or treaty right.

Proponents of dedicated municipal transit facilities or services, other than heavy rail, have the option to provide written notice to the Director of Environmental Assessment Branch and the appropriate regional director of the ministry indicating their intent to proceed with their transit project pursuant to the MCEA. **The MCEA does not include heavy rail projects as an undertaking.**

For those transit projects that are included in Schedule 1 in the Transit Regulation and will involve mixed uses (i.e., cars and public transit) or will involve other infrastructure projects that are not part of the dedicated transit project, proponents are required to proceed with their undertaking pursuant to the MCEA.

For additional information on the transit project assessment process, please refer to Schedule 1 of the transit regulation and the Ministry of Environment, Conservation and Parks' Guide: Ontario's Transit Project Assessment Process, January 2014.

A.2.10.9 Canada's *Impact Assessment Act*

Municipal projects may be subject to the requirements of the federal *Impact Assessment Act*. The *Impact Assessment Act* came into force on August 28, 2019, and repeals the *Canadian Environment Assessment Act, 2012*.

The information contained in this section is not all-inclusive and is provided for information purposes only to highlight for proponent's potential federal EA requirements. For specific details, refer to the legislation and associated regulations. Copies of the *Impact Assessment Act* and its regulations, as well as guidance materials are available on the Impact Assessment Agency of Canada's (Agency) website at www.canada.ca/iaac.

The *Physical Activities Regulations* (also known as the Project List) identify types of projects that may require an impact assessment under the IA Act. When the physical activity associated with the carrying out of a proponent's project is described in the Project List, the proponent must provide the Agency with an Initial Project Description.

Proponents are encouraged to contact potential federal authorities as early as possible so that all requirements for their municipal projects can be identified.

Under the *Impact Assessment Act*, a federal EA is required for a proposed undertaking if:

- The proposed project is listed in the Project List and the Agency determines that a federal impact assessment must be conducted; or,
- The federal Minister of the Environment and Climate Change designates the proposed project.

A.2.10.10 *Fisheries Act*

On August 28th, 2019, provisions of the new *Fisheries Act* came into force including new protections for fish and fish habitat in the form of standards, codes of practice and guidelines for projects near water.

The purpose of the *Fisheries Act* is to provide a framework for the proper management and control of fisheries and the conservation and protection of fish and fish habitat, including by preventing pollution. Where a project may have impacts to fish or fish habitat, proponents are expected to consult with the Department of Fisheries and Oceans. In some cases, a federal review may be triggered and/or an authorization under the *Fisheries Act* may be required.

A.2.10.11 *Canadian Navigable Waters Act*

In 2019, the Navigation Protection Act was amended and renamed the *Canadian Navigable Waters Act* to better reflect its purpose.

The *Canadian Navigable Waters Act* is a federal law designed to protect the public right of navigation. It ensures that works constructed in navigable waterways are reviewed and regulated so as to minimize the overall impact upon navigation.

Transport Canada administers the Act through the Navigation Protection Program. Where a project may affect navigable waters and is not considered as minor work, proponents are expected to consult with Transport Canada to determine if an application for an approval to the Navigation Protection Program is needed.

A.2.10.12 *Species at Risk Act (SARA)*

The purposes of the federal *Species at Risk Act* (SARA) are to:

- prevent wildlife species from being extirpated or becoming extinct;
- to provide for the recovery of wildlife species that are extirpated, endangered or threatened as a result of human activity; and
- to manage species of special concern to prevent them from becoming endangered or threatened.

A series of measures applicable across Canada provides the means to accomplish these goals. Some of these measures establish how governments, organizations, and individuals in Canada work together, while others implement a species assessment process to ensure the protection and recovery of species. Some measures provide for sanctions for offences under the *Species at Risk Act.*

To learn about the species' critical habitat, consult the SARA Public Registry. You can also contact the specialists at Environment and Climate Change Canada or Fisheries and Oceans Canada or provincial or territorial authorities to find out how to comply with the *Species at Risk Act.*

Further information on SARA can be found at:

- https://www.canada.ca/en/environment-climate-change/services/environmental-enforcement/acts-regulations/about-species-at-risk-act.html
- www.sararegistry.gc.ca
- www.cosewic.ca

A.3 Consultation

Consultation early in and throughout the process is a key feature of EA planning. Consultation is a two-way communication process between the proponent and affected or interested stakeholders or Indigenous Communities that provides opportunities for information exchange and for those consulted to influence decision-making. The degree to which decision-making can be influenced will depend on the nature of the problem or opportunity being addressed, the alternatives and their environmental effects, the nature of any concerns which are identified, and the responsibilities of the proponent. Through an effective consultation program, the proponent can generate meaningful dialogue between the project planners and the general public, property owners, community representatives, Indigenous Communities, interest groups, review agencies and other municipalities. This allows an exchange of ideas and the broadening of the information base leading to better decision making. One of the principal aims of consultation, therefore, is to achieve resolution of differing of points of view, thus reducing or avoiding controversy and, ultimately, avoiding an order under section 16 of the EAA. Furthermore, contact with review agencies will ensure that proponents are made aware of the government agency requirements that need to be addressed as part of the planning process or through the issuance of permits or approvals following the completion of the MCEA process.

This section discusses who may be interested in a project and identifies the timing and type of mandatory notification requirements. **These are a minimum only.** Proponents must tailor the consultation program to address the needs of a specific project and those interested in the project. Supplementary information is provided in Appendix 5 while sample notices are provided in Appendix 6.

A.3.1 Municipal Council

It is important to keep Council aware of the study status. The manner in which this is done will vary considerably from municipality to municipality and can range from members of Council participating actively in the study, to being kept informed by staff reports during the course of the study, to receiving a report at the conclusion of the study. Project managers should confirm with Council as to their desired level of involvement. For example, members of Council would likely wish to be informed of any contacts with the general public.

A.3.2 Stakeholders

Potential stakeholders include the following:

- The **public** - individual members of the public including property owners, who may be affected by the project; individual citizens who have a general interest in the project; special interest groups which may have been created specifically to address concerns related to the project, or whose interest may be centered on specific issues and concerns; community representatives; and the general public.

- **Review agencies** - government agencies who represent the policy positions of their respective departments, ministries, authorities or agencies (see section A.3.6). These include federal, provincial and municipal or local agencies whose position may result in regulatory or statutory approval.

- **Municipalities** other than the proponent.

A.3.3 Indigenous Communities

Indigenous Communities should be directly contacted throughout the planning process. Indigenous Communities may be interested in a project generally or may have Constitutionally protected Aboriginal or Treaty rights that may be impacted by a project. Proponents should refer to section A.3.7.

A.3.4 Timing of Contact

A.3.4.1 Mandatory Points of Contact

Exhibit A.2, Flow Chart, identifies a number of **mandatory contact points,** i.e., two for Schedule B activities and three for Schedule C activities. While not required, proponents may still want to provide notice or consult with interested parties with respect to an exempt project (see section A.1.2.2).

The contact points identified for Schedule B and C projects are a minimum. For controversial, lengthy or complicated projects however, it will likely be necessary to make additional formal contacts or to maintain on-going contact with the public, Indigenous Communities or review agencies.

Proponents should tailor the consultation plan to reflect the project and the interested parties.

First Mandatory Point of Contact:
By Phase 2 of the planning process, a proponent will have identified the problem or opportunity, identified and evaluated alternative solutions to the problem, and, made a general inventory of the natural social and economic environments in order to determine the possible impacts which each of the alternative solutions might have on the environment. The purpose of the first contact is to review these issues with them and to allow the public, Indigenous Communities and stakeholders an opportunity to provide input to the

identification of the problem or opportunity and alternative solutions, and to assist in the selection of a preferred solution.

This will allow the proponent to inform those being consulted of the nature of the problem or opportunity, the need for the project, the planning and design details formulated to date, and the inventories of the natural, social and economic environments; and, would provide a forum to discuss potential impacts and local sensitivities. The opportunity should be taken to explain the MCEA planning process and to outline the rights and opportunities of the public with respect to participation, including their roles and responsibilities, how to raise concerns and provide feedback, and the right to request a section 16 order on the grounds that an order may prevent, mitigate or remedy adverse impacts on Constitutionally protected Aboriginal or treaty rights (See section A.2.8).

The first mandatory contact with Indigenous Communities, the public and review agencies therefore occurs towards the end of Phase 2 when a notice is issued inviting comment and input (see Appendix 6, Sample Notice - Public Comment Invited).

In many instances, the proponent will already have identified which Schedule best fits the project. Review of the project with the public and agencies at this stage and the selection of the preferred solution, however, will allow the proponent to review and confirm a choice of Schedule at the conclusion of Phase 2. **The nature and extent of contact at this stage will, therefore, be common to both Schedule B and Schedule C projects.**

Second Mandatory Point of Contact:

a) **For Schedule B projects,** input from Indigenous Communities, the public and review agencies will have been received at the first point of contact in Phase 2 and the proponent would have continued the planning process. It is then necessary for the proponent to **contact Indigenous Communities, the public and other stakeholders for the for the second mandatory contact to advise of the completion of the planning process. A Notice of Completion is issued at this point** (see Sample Notice, Appendix 6) and completes the requirements for Schedule B projects. The comment period associated with the Notice of Completion is normally 30 calendar days. In special circumstances, the proponent may choose to set a longer period (for example, if public holidays intervene). In any event, the Notice of Completion shall clearly state the comment period and the date by which submissions or requests for an order are to be received. This notice shall include information with regard to requesting a section 16 order. If no request is received within the comment period specified in the Notice, the proponent may proceed to design and construction of the project after the end of the statutory waiting period. See subsection 15.1.1.(5) of the EAA.

b) **For Schedule C projects,** the proponent shall follow the more formal project development and planning process outlined in Phase 3. These activities will identify alternative designs, will evaluate the alternative designs, and will identify the possible impacts of the alternative designs on the environment. **The second mandatory point of contact** is therefore intended to review these alternatives with Indigenous Communities, the public and agencies to assist in the selection of the preferred design for the chosen

solution.

It is anticipated that the project will be well developed at this stage and a preliminary recommendation or preferred design will probably have been identified. Although this should be conveyed to the public at this point of contact, it is important that the preliminary recommended design not be presented as a decision but as a preliminary preference following an evaluation of the alternatives and their impacts on the environment, based on available information. Indigenous Community, public and agency input is necessary at this stage to assist the proponent by providing additional information, in reviewing the evaluation and in arriving at the most appropriate decision.

This is, therefore, an important contact point for most Schedule C projects. Assuming there are a number of interested and/or affected members of the public, this often involves the holding of public information centres, workshops or meetings etc. A notice in the form of Notice of Public Consultation Centre, or similar to suit local circumstances, shall therefore be issued at this point (see Sample Notice, Appendix 6). Indigenous Communities must be contacted directly, and Community-specific consultation opportunities offered to the Indigenous Communities throughout the MCEA process.

Third Mandatory Point of Contact (Schedule C Projects Only):

Schedule C projects require the completion of an Environmental Study Report which is intended to document the entire planning process undertaken through Phases 1, 2 and 3 (See section A.4.2 for details of the preparation of the Environmental Study Report).

A **third mandatory point of contact occurs when the Environmental Study Report is placed on the public record for a period of at least 30 calendar days**. Normally 30 days will be adequate, but the proponent may choose to set a longer period under special circumstances (e.g., if public holidays intervene; to accommodate pre-set Council meeting dates on which to review the Environmental Study Report; or if a particularly detailed or lengthy Environmental Study Report might not reasonably be reviewed by the public in 30 calendar days).

Contact at this point is through the issuance of a Notice of Completion which, will advise the public, particularly those who have expressed an interest and a desire to stay involved, Indigenous Communities, and review agencies where the Environmental Study Report may be seen and reviewed and the manner in which comments are to be received. **This Notice shall advise Indigenous Communities, the public and review agencies of their rights with regard to requesting a section 16 order and how to raise concerns with the proponent** and shall clearly state the comment period and the date by which submissions and/or requests are to be received by the Minister (see Sample Notice, Appendix 6).

A.3.4.2 Discretionary Points of Contact

Section A.3.4.1 describes the mandatory points of contact. These, however, are a minimum only. Discretionary points of contact may also occur:

- **During Phase 1 - To review and develop a clear problem statement:**
  For complex projects, many sectors of the community may be affected in different ways. The problem or opportunity as viewed by the proponent, may not be seen in the same way by the public or Indigenous Communities or may be seen in different contexts. There may, therefore, be benefit in discussing the problem or opportunity with the public and Indigenous Communities at an early stage to ensure, not only a better understanding of the definition of the problem and/or opportunity, but also identification of the most appropriate alternative solutions. In this way, the mandatory public consultation in Phase 2 could be more meaningful.

- **Between Phase 3 and Phase 4 - To review the preferred design prior to finalization of the Environmental Study Report:**
  Following public consultation in Phase 3, a preferred design is selected, and, in many cases, a great deal of work will ensue in developing the project in sufficient detail to complete the Environmental Study Report. For a project which has generated controversy or concern, the proponent may find it advantageous to undertake further consultation, at least with those members of the public, Indigenous Communities, or review agencies who have expressed concern and who have been involved in the planning process, prior to finalization of the Environmental Study Report and placing it on the public record. This will allow an additional opportunity to resolve outstanding issues. It is preferable to modify a project at this stage, if appropriate, than to negotiate changes to the Environmental Study Report in a confrontational atmosphere, under the possible threat of a request for a section 16 order.

A.3.5 Public Consultation

A.3.5.1 Development of a Public Consultation Plan and Consultation Records

At the outset of the study, a proponent shall develop a public consultation plan to address the following while taking into consideration the minimum mandatory requirements and objectives of effective consultation:

- potential stakeholders and special requirements;
- level of consultation;
- appropriate means of contact; and
- general timing of contact.

It is strongly recommended that the Consultation Plan be prepared as a formal document. Be sure the methods for contacting the public are consistent with the Notice Requirements particularly if your municipality has developed its own unique minimum notice requirements (see A.3.5.3 Public Notices).

The following is an outline for the development of a Consultation Plan:

- define goals and objectives for the Consultation Plan considering the complexity of the EA project in the context of the Problem/Opportunity statement;
- identify stakeholders and potential concerns/issues that may be raised;
- develop a stakeholder distribution list (contact information for who will be contacted

within each identified stakeholder group);
- confirm minimum consultation requirements, per the MCEA, in the Consultation Plan;
- develop strategies and communication activities (e.g., communication channels, materials, venues, etc.) to enhance the minimum consultation requirements;
- implement and document the consultation plan process (record or log); and
- evaluate need for mid-course corrections.

Consultation Records
A Consultation Record should be maintained and included in the Project File Report or Environmental Study Report as an appendix. The Consultation Record should be detailed, including:

- an overall record of communication (who was contacted, date of contact, method of contact) including details of follow-ups;
- proof of delivery of documents;
- the date of meetings, the agendas, any materials distributed, those in attendance and copies of any minutes prepared;
- concerns/comments/feedback provided and an explanation of how concerns were addressed; and
- copies of all correspondence and communication (to and from the public, government agencies and stakeholders).

Consultation Records are one of the first items that the ministry will request from a proponent when a section 16 order is requested and therefore it should be readily available. Also, a formal document will ensure that consultation is organized and complete.

A.3.5.2 Methods of Public Contact

There are several ways in which the public may be involved in the project. It is the proponent's responsibility to determine the most suitable and effective means of involving the public. It is recognized that methods vary from community to community and with the nature of the project and potential environmental effects.

The proponent must decide which method of contact will best provide the public and government agencies with sufficient information to provide input and reasonably address issues and concerns. What is suitable for a large controversial project in a populous urban location would be inappropriate in a small rural community undertaking a small straight forward project.

Appendix 5 outlines a number of methods for contacting and consulting with the public. A consultation plan will likely include one or more or a combination of these methods.

Be sure the methods for contacting the public are consistent with the Notice Requirements particularly if your municipality has developed its own unique minimum notice requirements (A.3.5.3 of the MCEA). It is then necessary to document the method, timing and content of all contact with the public, government agencies, other regulatory bodies, and any other identified stakeholders in a formal consultation record (see A.3.5.1 of the MCEA).

If a proponent develops its own Notice Requirements (A.3.5.3), they must clearly describe the approved procedure in the Project File Report or Environmental Study Report. This will increase transparency and clarify for all stakeholders who are reviewing the documentation.

A.3.5.3 Public Notices

Each of the points of contact with the public shall be advertised by means of published Notices to the public. In some cases, the notice itself may constitute contact with the public and no further dialogue may be necessary other than to invite input. For larger projects, however, a public notice will give details about information centres or workshops, availability of information for review, or some other means of contact between the proponent and the public.

Historically, the MCEA required that a notice be published in a local newspaper having general circulation in the area of the project.

However, proponents are now encouraged to establish their own custom policies for providing notice to the public. Section 270(1)(4) of the *Municipal Act, 2001* requires municipalities to adopt policies for providing notice to the public for a variety of circumstances and normally municipalities have complied with this section by adopting a municipal notice bylaw. Proponents are encouraged to develop notice procedures that suit their individual municipalities and work with the Municipal Clerk to incorporate these notice procedures into their municipal notice bylaw. Once incorporated into their municipal notice bylaw, proponents will comply with section A.3.5.3 of the MCEA if they follow the notice procedures set out in their municipal notice bylaw. Alternatively, a standardized procedure can be created specifically for the consultation/notification under the MCEA process, as long as it's been adopted by the municipality and made available to the public.

For example, instead of the traditional *"two notices in a local newspaper"*, a municipality could decide that notices will be provided to stakeholders on the municipal website a minimum of 10 days prior to the meeting. The consultation plan for each MCEA project would then set out specific details for consultation. Alternatively, a municipality may decide to adopt a detailed notice procedure that sets out the consultation process for all MCEA projects.

Every reasonable effort should be made to ensure the notices are published in an accessible media with high visibility. This will typically mean publishing notices in multiple forms of media (newspaper, website, social media, flyers/posters in public spaces, printed notices delivered door to door, press release, etc.). The type, scale and location of the project must be carefully considered.

A sample of a detailed process follows:

Notice Type	Review Agencies	Members of the Public	Indigenous Communities
Schedule B Notice of Commencement	Notice via email	Signage at project location Notice on Municipal website and mail to directly impacted (adjacent) owners	Mail or email with minimum of one follow up communication and offer for a special meeting
Schedule C Notice of Commencement	Notice via email	Signage at project location Notice on Municipal website and mail to directly impacted owners	Mail or email with minimum of one follow up communication
Master Plans Notice of Commencement or Notice of Public Meeting	Notice via email	Signage in community Notice on Municipal website	Mail or email with minimum of one follow up communication Offer to meet with interested communities
Schedule C Notice of Public Consultation (minimum 10 days prior to meeting)	Notice via email	Email to anyone that responded to the Notice of Commencement and Mail to directly impacted (adjacent) owners and Notice on Municipal website	Mail or email with minimum of one follow up communication and offer for a special meeting.
Schedule B & C (and master plans) Notice of Completion	Notice via email	Email to anyone that has expressed interest in the Project and Notice on Municipal website. Copy of Project File Report and Environmental Study Report available on project website	Mail or email with minimum of one follow up communication

The format for notices may vary from municipality to municipality, but the following points shall be considered as minimum mandatory requirements.

Contents:

- date the notice was issued;
- project name, description and purpose;

- proponent name and contact information (address, phone, fax, email) where comments or questions should be directed to;
- name of the Class EA being followed (e.g., the MCEA);
- schedule of the MCEA being followed (B or C);
- a brief description of the project which outlines the nature of the problem or opportunity and the need for a solution;
- map of where project is located (where applicable);
- public record locations where documents are located for viewing or information (where applicable) and when they are available;
- meeting locations (where applicable);
- project website address (where applicable);
- Freedom of Information and Protection of Privacy (FIPPA) disclaimer;
- For the Notice of Completion, the right to request a section 16 order;
- For the Notice of Completion, information on who/where the section 16 order request must be sent to, including Minister of the Environment, Conservation and Parks, Environmental Assessment Branch (EAB) Director and proponent contact.

Two Published Notices:
Two (2) published notices previously meant the same notice appearing in two (2) separate issues of the same newspaper. However, it can now also mean that notices are provided in at least two widely available mediums (e.g., newspaper, website, social media, flyers/posters in public spaces, printed notices delivered door to door, press release, etc.) at multiple timelines (e.g., two weeks in a row), provided that this process is consistent with the municipality's bylaw or custom notification procedure.

Where possible, and for larger projects, the proponent should notify and solicit input from the public in ways other than newspaper advertisements alone.

First mandatory point of contact:
Schedule B and C projects - two (2) published notices. In addition, where appropriate, notices mailed, delivered or posted to all **properties** abutting the project and to all persons who might reasonably have an interest in the project.

Second mandatory point of contact:
- Schedule B projects - two (2) published Notices of Completion
- Schedule C projects - two (2) published notices

Third mandatory point of contact:
Schedule C projects - two (2) published Notices of Completion
For both the Second and the Third mandatory points of contact, the proponent shall also mail or deliver copies of the notices to all who had expressed interest in the project. **For this purpose, the proponent shall maintain throughout the MCEA planning process, a list of all persons who provide comment and input to the process or otherwise express an interest in the project.**

Sample Notices for Schedule B and Schedule C projects and for each point of public

contact are included in Appendix 6. The Notices describe hypothetical projects in a hypothetical municipality and are intended only as a guide.

The proponent should endeavour in its notices and other material presented to the public to use plain, simple language which can be readily understood by the lay person.

A.3.5.4 Information About the Municipal Class Environmental Assessment

The proponent should recognize that many members of the public and Indigenous communities may not be familiar with environmental assessment legislation or, more particularly, with the requirements of the planning process set out in the MCEA. Opportunities should, therefore, be provided by the proponent to explain the requirements as fully as possible to those seeking information or clarification. The proponent should consider making copies of the ministry's most current consultation guide and the MCEA available to the public at convenient locations.

A sample public handout is provided in Appendix 5 which includes basic information about the MCEA process. This can be customized to a specific project.

A.3.6 Review Agencies

As a minimum, review agencies are to be contacted at the mandatory contact points identified in Exhibit A.2 and discussed in section A.3.4. The following provincial ministries, public authorities and federal departments and agencies have stated their desire to be Review agencies to be circulated on relevant Class EA projects and have been designated as "review agencies" for that purpose. It should be noted that agency names were applicable as of the time of March 2022. Any subsequent change in agency name will not change the need to contact agencies that have an area of interest that will be affected by a project. **Other than the agencies to be contacted in all cases (see below), only those agencies who are likely to have an interest in the project need be contacted.** In particular, the Ministry of the Attorney General should only be contacted if the project is relevant to that ministry.

Proponents should determine whether the nature of their project and the concerns and issues related to it require contact with other provincial ministries, public authorities or federal departments or agencies not listed here (see Appendix 3).

TO BE CONTACTED IN ALL CASES:

- Ministry of the Environment, Conservation and Parks, Environmental Assessment Branch
- Other directly affected municipalities

TO BE CONTACTED AS APPROPRIATE:

Provincial Ministries and Agencies (see Appendix 3)**:**

- Ministry of Agriculture, Food and Rural Affairs (Land Use Planning)
- Ministry of Children, Community and Social Services
- Ministry of Economic Development, Job Creation and Trade

- Ministry of Energy
- Ministry of Health (Local Medical Officer of Health)
- Ministry of Citizenship and Multiculturalism
- Ministry of Infrastructure
- Ministry of Municipal Affairs and Housing
- Ministry of Northern Development (District Office)
- Ministry of Mines (District Office)
- Ministry of Natural Resources and Forestry (District Office)
- Ministry of Transportation (District Office)
- Niagara Escarpment Commission (as applicable to the study area)
- Ontario Provincial Police
- Ontario Realty Corporation
- Electrical Utilities
- Waterfront Regeneration Trust

Federal Departments and Agencies (see section A.2.11 and Appendix 7)

- Department of Fisheries and Oceans - Habitat Management and Enhancement Division
- Environment and Climate Change Canada - Ontario Region
- Transport Canada - Navigation Protection Program - Canadian Coast Guard
- Transport Canada - Environmental Management Programs - Ontario Region
- Canadian Transportation Agency
- Parks Canada
- Impact Environmental Assessment Agency
- Indigenous and Northern Affairs Canada
- Innovation, Science and Economic Development

Other

- Conservation Authorities
- Regional and area municipalities
- Counties, districts and planning boards
- Emergency services (fire, police, ambulance)
- School boards
- Transit Authorities (e.g., TTC)
- Rail Authorities (CN, CP and Metrolinx)
- Municipal heritage committee
- Utilities (natural gas, cable, telephone)
- Local Heath Units

It is anticipated that review agencies will be contacted by formal letter or notice, although it is often useful to include the review agencies in the mailing to be sent to the general public. This ensures that the review agencies are in receipt of the same information as the general public and can therefore provide input and comment within the same context as the general public.

Projects that are subject to a federal decision (e.g., infrastructure program funding), approval or permit (e.g., a *Navigable Waters Protection Act* permit for a bridge) or are on or require the transfer of federal land, may be subject to the *Impact Assessment Act* (see section A.2.10.9). In such cases, the federal regulatory authority should be consulted as early as possible and may require the proponent to submit a project description which outlines the location, design and planned environmental studies for the project. The federal Coordination Regulation requires the regulatory authority to respond within certain defined time frames.

It should be recognized, however, that the mandates of review agencies are such that their needs and requirements for information may be more stringent than for members of the general public. Proponents should be prepared to provide review agencies with more detailed information, when requested. Whereas it may be reasonable for information to be made available to the general public, for example, at the local library, this would be unreasonable for review agencies.

Review agencies should not be placed in a position of having insufficient time in which to review a project (either Schedule B or Schedule C) and to give meaningful and informed comment to the proponent. The proponent is therefore advised to follow up with the relevant review agencies to ensure that the appropriate personnel have received notification of the proposal and that any concerns can be addressed.

It is suggested that proponents establish early in the planning process what the information needs will be for specific review agencies who will have an interest in a particular project, and set out a procedure to satisfy those needs. **Review agency responses are to be documented in the Project File Report or the Environmental Study Report.**

A.3.7 Indigenous Communities

Proponents proceeding pursuant to the MCEA are required to consult with Indigenous Communities who may be affected by a proposed undertaking. Proponents are required to contact the ministry as early as possible to request a list of Indigenous Communities for consultation. Projects proceeding pursuant to the MCEA may have the potential to impact on Indigenous harvesting activities, or on archaeological resources.

In addition to a public consultation plan, proponents must develop a plan for how Indigenous Communities will be consulted. The consultation plan should be flexible and take into consideration the preferences of Indigenous Communities with respect to consultation with their Community. Indigenous Communities are to be contacted directly with respect to the project using various means (mail, email and phone) and at a minimum at the mandatory contact points identified in Exhibit A.2 and discussed in section A.3.4. Community-specific consultation opportunities, such as information on the project, meetings etc., should be offered to communities.

Proponents must document the consultation process with Indigenous Communities. In addition to the information required by section A.3.5.1 above. The following information, as

applicable, should be documented with respect to Indigenous consultation:

- any information that was shared by an Indigenous Community in relation to its asserted or established Aboriginal or treaty rights and any potential adverse impacts of the proposed activity on such rights;
- any proposed project changes or mitigation measures that were discussed and feedback from Indigenous Communities on those commitments;
- information regarding any financial assistance provided by the proponent to enable participation by Indigenous Communities in the consultation;
- periodic consultation progress reports or copies of meeting notes if requested by the ministry; and
- a summary of how the delegated aspects of consultation were carried out and the results.

Proponents may find it useful to keep a separate "Indigenous Community Consultation Record" which tracks consultation with Indigenous Communities separately from other consultation with other interested parties and stakeholders. This can help the Crown easily assess the proponent's consultation activities with Indigenous Communities.

A.3.8 Review of Project File Report / Environmental Study Report

It is good practice to provide review agencies with the opportunity to comment on a draft copy of the Project File Report or Environmental Study Report.

When completed, the Project File Report or Environmental Study Report shall be placed on the public record and be available for review by Indigenous Communities, the public and review agencies for a period of at least 30 calendar days.

For most municipalities placing on the public record will mean placing a copy on the municipality's website with hard copies available for viewing at select convenient locations. For complex projects, a summary of the Project File Report or Environmental Study Report could be placed on the website with hard copies of the full version available at select locations.

During preparation of the Project File Report or Environmental Study Report, it may be worthwhile to circulate draft wording for certain technical sections to relevant agencies to ensure wording in the final document is acceptable. For particularly complex projects, the ministry's Regional EA Coordinator may ask to review a draft of the entire Project File Report or Environmental Study Report before it is finalized.

Whatever location is used to place the document on the public record and wherever the document is available for review, the location should be clearly indicated in the notices to the public. In the case of large or controversial undertakings, it may be necessary to have more than one copy of the Project File Report / Environmental Study Report available for review. In some cases, it may be necessary to print several copies and make them available to members of the public wishing to have individual copies.

One of the key principles of successful planning under the EAA is:

> *"to provide clear and complete documentation of the planning process followed, to allow for the traceability of decision making with respect to the project.*

Documentation of the planning and design process followed in developing Schedule B and C projects is, therefore, a mandatory requirement of the MCEA. It is important that, for all Schedule B and C projects, documentation be established that allows traceability and clearly identifies the mitigation measures, monitoring requirements and commitments made to stakeholders that were discussed during the EA process.

The following sections provide details of the documentation requirements which are a minimum in all cases.

A.4 Project Documentation

A.4.1 Project File Report (Schedule B)

Formal planning of Schedule B projects ends at the conclusion of Phase 2. At this point, documentation of the planning process followed for Phases 1 and 2 shall be finalized and a Notice of Completion shall be issued, allowing for a minimum 30-day comment period, during which documentation may be reviewed and comment and input received. Documentation of the planning process shall be prepared and maintained in such a way that it is suitable for easy review by interested parties at any time.

Proponents shall maintain a **Project File Report** for all Schedule B projects.

The Project File Report shall be organized chronologically in such a way as to clearly demonstrate that the appropriate steps in Phases 1 and 2 have been followed and explain the following:

- background to the project and earlier studies;
- the nature and extent of the problem or opportunity, to explain the source of the concern or issue and the need for a solution;
- description / inventory of the environment;
- the alternative solutions considered, and the evaluation process followed to select the preferred solution;
- reports or studies undertaken on various elements of the environment as appropriate;
- follow-up commitments, including any monitoring necessary; and
- the public and Indigenous consultation undertaken and how concerns raised have been addressed.

The Project File Report shall contain a complete record of all activities associated with the planning of the project and shall include:

- correspondence;
- copies of notices, letters, bulletins relating to public consultation;

- memoranda to file explaining the proponent's rationale in developing stages of the project; and
- copies of reports prepared by consultants and others.

Proponents may wish to include in the Project File Report, a short summary listing key activities and the principal decisions/conclusions. Copies of the Project File Report and such a summary should be made available on the municipality's website with hard copies available for viewing at selected convenient locations.

A.4.1.1 Revisions to Schedule B Projects

Due to unforeseen circumstances, it may not be feasible to implement the project in the manner outlined in the Project File Report. Any significant modification to the project which occurs after the filing of the Project File Report shall be reviewed by the proponent and an addendum prepared.

Similarly, if the period of time from the later of (i) the filing of the Notice of Completion in the public record, or if applicable (ii) the decision on a request for an order under section 16 to the commencement of construction for the project exceeds ten (10) years, the proponent shall review the planning and design process and environmental setting to ensure that the project and the mitigating measures are still valid given the current planning context.

In either event, the reviews shall be documented in the Project File Report and the proponent shall issue a Notice of Addendum to identified Indigenous Communities, members of the public and review agencies. A minimum comment period of 30 calendar days shall be provided for review and response by Indigenous Communities, the public and stakeholders. If the addendum details a change to the project/undertaking, then the Notice of Addendum shall include information on the ability to request a section 16 order (see section A.2.8). Where implementation of a project has already commenced, those portions of the project which are the subject of the revision, or have the potential to be directly affected by the proposed change, shall cease and shall not be reactivated until the termination of the comment period.

A.4.2 Environmental Study Report (Schedule C)

An Environmental Study Report must be prepared for each project that proceeds through the Schedule C planning process described in the MCEA. The Environmental Study Report will be prepared when the preferred design has been selected and design work has progressed to the point where the details of any environmental protective measures to be incorporated in the construction have been finalized.

A notice indicating completion of the Environmental Study Report and its filing on the record will be issued to the public and to all parties who have been previously contacted and who have indicated the desire to stay involved in the planning of the undertaking.

A.4.2.1 Format and Content

In general, the Environmental Study Report will provide a complete account of the planning process followed for the project. The Environmental Study Report should include only what

is necessary to cover fully the matters considered during the planning process. For a straightforward non-controversial project with relatively little public interest, the Environmental Study Report may be relatively brief. A more complicated, controversial project which involves a number of detailed studies and data collection and has raised special interest or concern with the public would demand a more comprehensive, lengthy, and more detailed Environmental Study Report. It would include details of all studies undertaken or data collected, the results and conclusions of all matters considered, a discussion of all issues raised by the public with an evaluation and response to each, and all other matters covered in the planning process.

Whatever format the Environmental Study Report takes, the proponent shall ensure that the language and terminology used, and the explanations given of technical matters considered, are readily understood by the public, government agencies and Indigenous Communities.

The outline for the preparation of the Environmental Study Report which follows is a suggested format only.

The Environmental Study Report does not necessarily have to follow the exact headings, order of presentation and content presented here. The following outline is intended to provide guidance on the type of information which would make the Environmental Study Report meaningful and which the public and government reviewers are likely to expect to have included. What is covered in the Environmental Study Report will depend on project specific conditions and the issues and concerns which the proponent addressed during project development and planning.

Executive Summary
This short summary provides an overview of the project and should include a brief description of the problem, the preferred solution, the method to be employed to resolve the problem, the principal environmental impacts of the project and the mitigating measures to be employed to offset them. The Executive Summary should also include a brief description of the consultation carried out and the principal concerns raised by Indigenous Communities, the public and agencies.

Chapter 1: Introduction and Background
This chapter should describe the background to the project and will cover the history of issues which have led to the identification of the problem. Earlier studies relating to the problem and undertaken by the proponent should be described and referenced.

An explanation of the MCEA planning process should be provided and should include the rationale for developing the project under the MCEA process. This section should include a description of the Environmental Study Report and explain its purpose.

This section should identify the project team, giving names and affiliations of the principal parties involved. The type and extent of involvement of the proponent, and details of the consultants, sub-consultants, planners, special advisors and others involved in the planning process should be given. The time frame over which the planning process was undertaken

should be given.

Chapter 2: Problem Statement
This chapter should describe the purpose of the project and should include a detailed description of the problem. The justification and need for the project, and its aims and objectives, should be provided.

If the consultation process has commenced at this stage, details should be provided of contacts with the public, Indigenous Communities, and review agencies, the concerns raised, and the way in which the concerns have influenced the development of the problem statement.

Chapter 3: Alternative Solutions
The alternative solutions considered should be detailed in this chapter. Details of the following should be provided, including:

- a description of the existing environment, i.e., natural, social, cultural economic and technical;
- the extent to which the alternative solutions resolve the problem;
- the advantages and disadvantages of the alternative solutions;
- the effects of the alternative solutions on the environment; and
- the decision-making process used to select the preferred solution.

Investigations and studies undertaken to prepare inventories of the environment and to assess impacts of the alternative solutions on the environment should be described and referenced. Details of the mitigating measures considered and their effectiveness in minimizing the environmental effects should be provided.

The chapter should include a description of the evaluation process employed to select the preferred solution. The decision-making process, and any ranking procedures employed, should be described.

Details should be provided of the consultation undertaken during this stage of project development. The type of public, government agency and Indigenous Community involvement, the number of meetings, the notification method and attendance at meetings should be documented. Details of the concerns raised by the public, government agency and Indigenous Communities and the manner in which they were addressed and accommodated by the proponent should be provided.

Chapter 4: Alternative Designs
This chapter should describe the alternative designs that were considered for the preferred solution. The following information should be documented:

- the extent to which the alternative designs address the solution to the problem;
- the advantages and disadvantages of the alternative designs;
- the effects on the physical, natural, social, cultural, economic and technical environments of each of the alternative designs; and
- the evaluation and decision-making process used to select the most appropriate

design.

This section requires that a description be provided of the detailed environmental inventory. Details of the mitigating measures to be employed should be given.

A description of the consultation program should be provided with details of the number of meetings, who was invited, how notification of the meetings was made, the issues and concerns raised by the public, government agencies and Indigenous Communities and how they were addressed in the evaluation of the alternative designs. Similarly, details of comments and input provided by the review agencies should be provided and an explanation given how issues were addressed.

Chapter 5: Project Description
A detailed description of the project should be provided, giving engineering characteristics of the works to be undertaken. The information provided in this chapter may include location plans and profiles, a description of lands to be affected by property acquisition, and should include a project schedule for the work.

A construction package should be described, with special reference to the mitigating measures to be employed during construction and how environmental commitments made during the planning process will be fulfilled. The anticipated hours of work, duration of the construction, the urgency of the works (if any) and timing constraints for construction should be described. The construction package should include details of methods for disposal of waste materials, and the control of nuisances e.g., dust, noise.

This section should contain information on the estimated costs of the project.

Chapter 6: Monitoring
This chapter should describe the monitoring program developed during the planning process designed to be carried out during and after construction. The program should monitor and review the environmental impacts predicted and the commitments made to mitigation throughout the planning and design process. The following items, for example, should be included:

- key impacts to be monitored;
- monitoring requirements during construction and during operation of the facility;
- the period during which monitoring will be necessary;
- frequency and timing of surveys, the location of monitoring sites and the methods of data collection, analysis and evaluation;
- the content, manner and form in which records of monitoring data are to be prepared and retained; and
- where and for how long monitoring records and documentation will be on file specific requirements for monitoring appropriate to the particular circumstances and conditions under which the project will be implemented.

This section should describe how unexpected environmental effects identified during the monitoring program will be addressed.

Appendices
Items should be included in an Appendix to provide technical support to specific aspects of the information documented in the Environmental Study Report. These may include:

- maps and plans
- press releases/notices
- public, government review agencies and Indigenous Communities contacted
- submissions, input and opinions received from the public and from review agencies
- reports of studies undertaken on various elements of the environment
- other detailed material referenced in the Environmental Study Report

A.4.3 Revisions and Addenda to Environmental Study Report

Change In Project or Environment
Due to unforeseen circumstances, it may not be feasible to implement the project in the manner outlined in the Environmental Study Report. Any significant modification to the project or change in the environmental setting for the project which occurs after the filing of the Environmental Study Report shall be reviewed by the proponent and an addendum to the Environmental Study Report shall be prepared. The addendum shall describe the circumstances necessitating the change, the environmental implications of the change, and what, if anything can and will be done to mitigate any negative environmental impacts. The addendum shall be filed with the Environmental Study Report and a Notice of Addendum (see Sample Notice, Appendix 6) shall be issued immediately to all potentially affected members of the public, Indigenous Communities and review agencies, as well as those who were notified in the preparation of the original Environmental Study Report.

A period of 30 calendar days following the issuance of the Notice of Addendum shall be allowed for review of the Addendum. If a change is being proposed to the project, the Notice of Addendum shall include the public's right to request a section 16 order (see section A.2.8). A proponent must wait a minimum of 30-days following the end of the comment period before proceeding with the implementation and construction of the project, subject to a section 16 order request being submitted, the minister making an order or the director issuing a Notice of Proposed Order. During the 30-day comment period and 30-day waiting period, no work shall be undertaken that would adversely affect the matter under review. Furthermore, where implementation of a project has already commenced, those portions of the project which are the subject of the addendum, or have the potential to be directly affected by the proposed change, shall be stopped and shall not restart until the end of the comment period and any statutory waiting period (see section15.1.1. of the EAA).

Lapse of time
A time lapse may occur between the filing of the Environmental Study Report and the implementation of the project. In such cases, the proposed project and the environmental mitigation measures proposed may no longer be valid.

If the period of time from the latter of (i) the issuance the Notice of Completion in the public record or (ii) a decision on an order request under section 16, to the proposed

commencement of construction for the project exceeds ten (10) years, the proponent shall review the planning and design process and the current environmental setting to ensure that the project and the mitigation measures are still valid given the current planning context. The review shall be recorded in an addendum to the Environmental Study Report which shall be placed on the public record.

Commence construction means to begin work in a meaningful way such as it is obvious that the project is proceeding. Sometimes the preferred solution determined by the EA process involves a project that is constructed in phases.

Examples could include expanding the capacity of a treatment facility by first expanding one component of the treatment process followed by a second phase to expand other components of the plant or expand the capacity of a road by expanding bridges and intersections followed by a second phase to expand the road sections between the intersections.

In these situations, the EA should be clear that the solution to the one problem is a series of phased projects. As long as the proponent has begun construction on a part of the solution (one of the component projects) within the 10-year window, then proponent can proceed with implementing the solution by constructing the remaining component projects. To proceed, it is recommended that the proponent document how proceeding is effectively implementing the main solution as per the original Environmental Study Report.

The Notice of Addendum shall be placed on the public record with the Environmental Study Report or Project File Report and shall be issued to the public, Indigenous Communities and to the review agencies. Where a change is being proposed to the /undertaking, the Notice shall include the ability to request a section 16 order (see section A.2.8). A proponent must wait a minimum of 30-days following the end of the comment period (including any extension) before proceeding with the implementation and construction of the project, subject to a section 16 order request being submitted, the minister making an order or the director issuing a Notice of Proposed Order.

Part B – Municipal Road Projects

In fulfilment of the requirements of the EAA, this section provides a broad description of the following with respect to municipal road projects:

- the projects, purpose and alternatives.
- the environment, typical effects and potential mitigating measures.

Section B.2 has been taken, for the most part, directly from the 1993 Class EA for Municipal Road Projects. While it focuses on road projects, the basic principles of the approach can also be applied to other projects included in the road schedules (see Appendix 1), for example, other linear paved facilities (see Glossary). Part B should be reviewed in conjunction with the project tables in Appendix 1; typical mitigation measures for potential effects in Appendix 2; and agency consultation recommendations based on environmental factors in Appendix 3.

The MCEA process, including consultation and documentation, is provided in Part A of this document.

B.1 Key Considerations

B.1.1 Key Considerations

Road projects/activities in general are discussed in Section B.2. This section addresses key considerations when developing and assessing alternatives.

When generating and evaluating alternative solutions in Phases 2 and 3 of the MCEA process, the proponent shall bear the following considerations in mind:

1. Land-Use Planning Objectives

Land-use planning objectives refer to the plans and policies as identified in provincial plans and municipal Official Plans and Secondary Plans. At a provincial level, key policies/plans include the Provincial Policy Statement, 2020 (PPS), the *Places to Grow Act, 2005* and associated Growth Plan(s). See section A.2.10 for more information on other applicable legislation.

The *Planning Act* requires that municipal Official Plans contain “goals, objectives, and policies established primarily to manage and direct physical change and the effects on the social, economic, and natural environment”. The *Planning Act* prescribes a rigorous process by which Official Plans are to be developed and periodically reviewed, including opportunities for extensive public consultation. Once in place, Official Plans are legal documents, and therefore, provide the specific municipal policies and objectives that need to be considered including, but not limited to, those for: urban areas, growth areas/corridors, rural areas, neighbourhoods and residential areas, employment areas, transit and transit-

supportive development, commercial, institutional, recreational, natural, open space, agricultural, and special policy areas.

2. Natural Heritage Features

The natural environment includes the following typical elements:

- Landforms (including valleylands)
- Groundwater
- Surface water and fisheries
- Terrestrial Vegetation and wetlands
- Wildlife and habitat; and
- Connections provided by, or between these, resources

Within this natural environment framework, significant natural heritage features may be identified at the local, regional, provincial or federal level reflecting municipal, Conservation Authority, provincial or federal designations/policies. Key elements such as valleylands, fish habitat, evaluated wetlands (including Provincially Significant Wetlands), significant portions of the habitat of threatened and endangered species, Areas of Natural and Scientific Interest (ANSI), and Environmentally Sensitive Areas (ESAs) will constitute significant natural heritage features. Woodlands and wildlife habitat may also constitute significant features if certain criteria are met.

Natural heritage features should be identified early in the EA process to determine significant features and potential impacts. Significant natural heritage features should be avoided where possible. Where they cannot be avoided, then effects should be minimized where possible, and every effort made to mitigate adverse impacts.

In most cases, municipalities have specific policies related to the protection of the natural environment. These policies, along with regional, provincial, and/or federal policies should be identified as part of the EA process.

3. Social Environment

The social environment includes existing communities, residential areas and recreational areas. Significant negative impacts to the social environment should be avoided where possible. Where they cannot be avoided, then effects should be minimized where possible, and every effort made to mitigate adverse impacts. Key considerations are the overall community impacts to residential property and access, community facilities and access, recreational facilities and access, pedestrians, cyclists, noise impacts and air quality.

In most cases, municipalities have specific policies related to the protection of the social environment. These policies, along with regional and/or provincial policies should be identified as part of the EA process.

4. Cultural Environment

"Cultural environment" refers to archaeological resources, built heritage resources and cultural heritage resources in the environment. Areas of archaeological potential must be identified in accordance with the *Ontario Heritage Act*. Relevant terms can be found in the glossary.

Significant cultural heritage resources must be conserved. Where significant cultural heritage resources cannot be avoided, adverse impacts are to be mitigated in accordance with provincial and municipal policies, procedures, best practices and guidelines.

5. Indigenous Peoples

Proponents proceeding pursuant to the MCEA are required to consult with interested persons and with Indigenous Communities who may be affected by a proposed undertaking. Municipalities are directed to contact the ministry for direction on consultation with Indigenous Communities. For more information, see Part A.3.7.

As part of the assessment process, proponents need to consider the potential for the project to impact:

- Reserve lands and/or Indigenous Traditional Land Use Areas
- Aboriginal or treaty rights and claims
- Use of land and resources for traditional purposes
- Aboriginal Peoples' industry and economic opportunities
- Archaeological sites

6. Economic Environment

Economic Environment includes commercial and industrial land uses and activities. It also includes the financial costs associated with the alternatives, including construction, operation, maintenance, and property costs.

7. Property

Significant impacts to property should be avoided where possible. Where they cannot be avoided, the effects should be minimized where possible, and every effort made to mitigate adverse effects.

Property impacts include direct impacts on access, parking, and buildings, and indirect impacts such as where relocating property lines would result in the property owner being out of compliance with local standards (e.g., building setback requirements, etc.).

8. Evaluation of Alternative Solutions

When evaluating alternative solutions, the following considerations should be kept in mind:

- Many of the potential alternative solutions may resolve more than one problem.
- The feasibility of the alternative solutions will depend, in part, on the nature and location of the infrastructure, the nature and location of the opportunity and/or

problem(s) being addressed, the comparative cost of the alternative solutions, and on the municipality's capacity to finance the extension of services.

B.1.2 Transportation Master Plans

Many municipalities undertake Transportation Master Plans to define their long-term transportation objectives as a supplement to transportation needs identified through their Official Plan development process. A Transportation Master Plan integrates existing and future land-use planning and the planning of transportation infrastructure with the principles of environmental assessment planning.

Transportation Master Plans build upon the analysis and detailed policies developed through municipal Official Plans. Therefore, it must be recognized that the link between Transportation Master Plans and Official Plans is fundamental. An Official Plan is a legal document, developed through a public and legislative process in accordance with the *Planning Act* that contains "goals, objectives and policies established primarily to manage and direct physical change and the effects on the social, economic and natural environment of the municipality". While Official Plans are approved under the *Planning Act*, typically they are developed through a process which applies the principles of EA planning. As such, Official Plans provide a planning and technical basis for undertaking infrastructure environmental assessment studies.

Transportation Master Plans are developed through a stakeholder consultation process that involves consultation with the public, government technical agencies, other municipalities, and Indigenous Communities. If developed in accordance with Section A.2.7 of the MCEA, at a minimum, a Transportation Master Plan can address Phases 1 and 2 of the MCEA process. As a result, a Transportation Master Plan can provide the basis for carrying out follow-up on EA studies of the specific components, including the problem and/or opportunity being addressed and the range of alternatives being considered. Transportation Master Plans are discussed in Section A.2.7.

B.1.3 Integration with the *Planning Act*

The MCEA also provides for the opportunity to integrate the requirements of the EAA with the requirements of the *Planning Act* as discussed in Section A.2.9. The key is that the requirements of both Acts must be met.

B.2 Description of the Projects, Purpose and Alternatives

In considering the alternative solutions to road and traffic problems in Phase 2, the proponent shall bear the following considerations in mind:

1. Non-structural Alternatives

On the premise that structural solutions to infrastructure problems generally have negative net environmental impacts, proponents should pay particular attention to non-structural solutions in evaluating alternatives.

Such alternatives might, for example, include the imposition of controls on private development (e.g., storm water management policies which require rainwater to be discharged onto the ground rather than into a storm sewer) or changes in traffic management practices (e.g., emphasizing alternative traffic routes by signing/traffic controls, or the removal of parking from roadways, rather than widening or reconstructing existing roads). Land use/zoning controls, transportation demand management measures, conservation programs, are further examples of soft technology measures which may deserve attention.

While these types of alternatives may not be effective in providing adequate solutions to immediate or critical transportation problems, they should be given serious consideration. Where possible, they should be implemented in combination with structural measures if it can be demonstrated that they can contribute to the overall solution.

For example, parking controls may allow a reduction in the size of a structural measure resulting in less environmental impact. Consideration of such alternatives would serve to focus a municipality's responsibility for the wise management of the resources under its jurisdiction, in a manner which would avoid the development of infrastructure problems through preventative or nonstructural measures.

2. The "Do Nothing" Alternative

Throughout Section B.2, the "Do Nothing" alternative can often be considered. In the "Do Nothing" alternative, no improvements or changes would be made to solve the identified problem or opportunity. This means that the problem would remain in the system. It does not necessarily mean, however, that no further development in the community would occur.

The "Do Nothing" alternative will be documented along with any other alternatives to the project which were examined.

The "Do Nothing" alternative may be implemented at any time during the design process prior to the commencement of construction. A decision to "Do Nothing" would typically be made when the costs of all other alternatives, both financial and environmental, significantly outweigh the benefits.

3. Evaluation of Alternative Solutions

When evaluating alternative solutions, the following factors should be kept in mind:

- Many of the potential alternative solutions may resolve more than one problem.
- The feasibility of the alternative solutions will depend, in part, on the nature and location of the transportation system, the nature and location of the problem(s), the comparative cost of the alternative solutions, the pressures for growth, and on the municipality's capacity to finance the extension of services.

B.2.1 New Roads

B.2.1.1 Description of the Projects

New road projects planned under this Class EA will involve the acquisition of a new right-of-way and the construction of an improved surface for vehicular traffic on a new road allowance which is separate from an existing right-of-way or will be a road or an existing road allowance where no road surface previously existed.

B.2.1.2 Purpose of the Project

New road projects will be undertaken to provide a new link in the road system for the following possible reasons:

- to provide relief to congestion of an existing road system,
- to shorten the travel distance between two points,
- to provide access to a new location,
- to accommodate growth and development.

B.2.1.3 Alternative Solutions

In many instances, there may be more than one way of solving problems or meeting the demand for a new road. Possible “Alternative Solutions” may include, for example:

1) Widen or improve existing roads,
2) Provide alternative transportation facilities such as bus, train, rapid transit, dedicated bus lanes, ferry, etc.,
3) Limit / manage growth,
4) Develop alternative routes for existing or anticipated traffic,
5) “Do Nothing”.

B.2.2 Road Widenings, Adjustments And Operational Improvements

B.2.2.1 Description of the Projects

Projects in this group will generally involve one or more of the following types of project:

- widening of driving surfaces
- changes to grade and cross-section
- provision of additional traffic lanes
- addition / replacement of equipment or facilities
- changes in management practices to achieve improved system performance

The development and implementation of a project will often involve additional work and activities incidental to the primary purpose of the project, but which must be included in the project. These may include, for example:

- acquisition of additional land
- construction of road related storm sewage facilities
- operational or maintenance activities, e.g. changes in signal timing, changes in pavement markings

B.2.2.2 Purpose of the Project

Projects developed under this Class EA will be proposed to resolve problems affecting the operation and efficiency of existing systems, to accommodate future growth of communities, or to address specific traffic or transportation problems or opportunities.

One or more of the following general problems may be addressed:

a) structural deficiencies
b) capacity deficiencies
c) unsafe conditions
d) changes in land use

The purpose or objective of a specific project will be determined by the nature and severity of the problem(s) being addressed. For the deficiencies identified above, the following types of problems would be resolved:

a) Structural Deficiencies:
Inadequacies in the pavement surface, the roadway base, or surface or subsurface drainage characteristics, may result in poor rideability which, if not corrected, may cause unsafe conditions or may result in the untimely failure of the roadway. An existing roadway may have sections where abnormally high maintenance requirements are necessary and which may result in large numbers of public complaints.

b) Capacity Deficiencies:
The existing roadway may be providing poor service to the user due to traffic congestion, resulting in frequent traffic delays. Alternatively, traffic projections may indicate that this condition will occur in the near future. Traffic increases may be the result of normal growth and may be predicted on the basis of past trends and known future developments; or they may be substantial and sudden as a result of a specific development.

Traffic carrying capacity of a roadway may be affected by numerous turning and stopping movements which give rise to slow moving or congested traffic conditions at certain times of day or at certain locations

Traffic congestion and a low level of service on an existing roadway may also be due to undesirable or outdated design features; for example, narrow traffic lanes, a lack of passing opportunities, or the absence of bus bays in heavily trafficked areas.

c) Unsafe Conditions:
A section of roadway may have been constructed to a lesser standard than adjacent sections of the same roadway. For example, the end of an urban roadway may be adjacent to a rural highway of considerably higher design standards, or vice versa. Depending on the nature of the transportation system and of traffic patterns, such situations can be confusing or annoying to a driver and may lead to problems in road safety, as well as restrictions in traffic flow.

An existing roadway may exhibit undesirable collision experience which may be caused, for example, by the following:

- turning movements by commercial/industrial traffic to and from public roadways.
- stopping, standing or parking activities due to the presence of commercial or similar properties.
- heavy pedestrian movements.
- poor visibility at intersections and access locations and in areas of pedestrian activity.
- poor geometries which may relate to horizontal alignment, grades, super elevation, clearance from fixed objects.
- structural condition of the pavement and base.
- operational characteristics of the roadway, such as traffic control devices, illumination, turning lanes.
- high traffic volumes.
- a combination of these and other factors specific to a given location.

d) Changes in Land Use:
Land development and other changes in land use may give rise to a number of traffic problems and deficiencies which may relate to safety, roadway capacity problems, increased traffic, increases in noise.

B.2.2.3 Alternative Solutions:

In many instances, there may be more than one way of solving problems or meeting the demands on existing road and traffic facilities. A number of solutions, termed “Alternative Solutions” may include, for example:

a) Structural Deficiencies:
Where a structural deficiency is identified, possible alternatives for consideration are:

- resurface existing roadway.
- minor reconstruction and subsequent resurfacing of existing roadway.
- “do nothing”.

Where a resurfacing or minor reconstruction will resolve a problem, a more complex alternative solution is neither required nor appropriate. However, where safety or geometric problems exist in addition to structural deficiencies other alternatives may need to be considered, such as:

- adjustment to alignment, grade or cross-section.

b) Capacity Deficiencies:
Where capacity problems exist, the following alternatives may be considered:

- modify existing roadway through non-structural improvements such as signing or traffic controls.
- diversion of traffic to other existing roadways.
- widen an existing road by the addition of through traffic lanes.
- provision of lane dedicated to high occupancy vehicles.

- correct a deficiency elsewhere in the road network.
- a new roadway on a new alignment.
- alternative transportation modes such as: (i) low capacity transit, e.g. bus; (ii) medium capacity transit, e.g. light rail transit; (iii) high capacity transit, e.g. subway.
- “do nothing”.

c) Unsafe Conditions:
The following alternatives may be considered to address a number of possible conditions or situations which give rise to a safety deficiency:

- turning movements:
  i) enact by-law to control turns
  ii) delayed or advanced green traffic signal
  iii) creation of turning lanes

- stopping or standing:
  i) by-law control
  ii) provision of off-street parking
  iii) provision of off-street parking

- pedestrian movements:
  i) pedestrian grade separation
  ii) walk phase on traffic signalization
  iii) improved sidewalks
  iv) increase traffic lane widths

- poor visibility:
  i) modify grade and/or alignment
  ii) remove sightline obstruction
  iii) improve street lighting

- geometrics:
  i) reduce speed limit
  ii) modify grade and/or alignment

- structural condition:
  i) resurface/reconstruct existing roadway
  ii) modify grade and/or alignment

- operational:
  i) modify traffic patterns by by-law, e.g. no turns, one-way streets
  ii) modify traffic patterns by restraint, e.g. traffic lights, stop signs
  iii) modify traffic by additions to roadway, e.g. add turning lanes

In most cases where unsafe conditions have been identified the Do nothing alternative is unacceptable.

d) Changes in Land Use:
Changes in land use may give rise to a number of deficiencies in the road network and in traffic conditions. Alternative activities to resolve a road deficiency are generally those described in the preceding paragraphs.

e) Noise Problems:
Whether or not traffic noise is a problem will depend on such variables as:

- proximity to noise sensitive land uses (e.g hospitals).
- insufficient setbacks in residential areas.
- Terrain.
- road grade (e.g. steep hills).
- high traffic volumes.
- poor road surface.
- heavy traffic volumes at night time.
- high proportion of truck traffic.
- high stop/start experience.
- traffic speed.

To address noise problems, the following possible alternative solutions may be considered:

- relocate arterial roadway away from sensitive land use areas.
- realign roadway to increase setback.
- change road elevation relative to noise receptors.
- reduce grades of hills.
- divert traffic to alternative routes.
- provide transit system.
- utilize appropriate asphalt mix to reduce tire noise.
- prohibit trucks at night time.
- provide facilities for through traffic.
- provide landscaping e.g. earth berms.
- construct a noise barrier (e.g. a berm or wall, or a combination of the two).
- reduce traffic speed.
- “do nothing”.

B.2.3 Interchanges, Grade Separations and Water Crossings

B.2.3.1 Description of the Projects

Projects in this group involve the following types of infrastructure (refer to the glossary for the meaning of these terms):

- Interchanges
- grade separations
- water crossings

B.2.3.2 Purpose of the Project

The requirement for an **interchange** will generally arise because of high existing or anticipated turning movements relative to the carrying capacity of an existing intersection or interchange. An interchange provides a significant-means of improving capacity by increasing the ability to handle turning movements and thereby reducing conflict between through and turning traffic. Collision experience and system compatibility may also contribute to the justification for an interchange.

A **grade separation** is generally justified where high existing or anticipated traffic volumes are identified. Reference to traffic in grade separation projects developed under this Class EA will generally mean road traffic although rail traffic may also justify the need for grade separation. A combination of high road traffic and high volume/high speed rail traffic will give rise for the need for a grade separation. A grade separation will be the preferred solution when turning movements are generally low or can be relocated. Similarly, a grade separation will be justified where high collision experience is a major factor.

A **water crossing** will be justified where an existing or a new roadway is required to cross a river, lake, canal, bay or similar water body. Replacement or modification to an existing water crossing facility may be necessary to address a structural deficiency, a functional deficiency related to transportation demands or a functional deficiency related to hydrological conditions.

B.2.3.3 Alternative Solutions

INTERCHANGES:

a) Existing At-grade Intersection:
Where a deficiency is identified at an existing at-grade intersection the following alternative solutions may be considered:

- minor reconstruction, e.g. add right or left turning lanes
- modify existing facility through non-structural improvements such as signing or traffic controls
- modify grade and/or alignment and/or cross-section.
- provide a grade separation
- divert traffic
- resolve a deficiency elsewhere in the road network
- “do nothing”

b) Existing Interchange:
Where a capacity deficiency is identified at an existing interchange, the alternative solutions which may be considered would include the alternatives considered above for existing at-grade intersections together with the following:

- add an interchange elsewhere in the road network.
- modify or replace the existing interchange.

c) No Existing Intersection or Interchange:
Where a new interchange is necessary and no intersection or interchange currently exists, all the alternative solutions listed above may be considered.

GRADE SEPARATIONS:

a) Existing At-Grade Intersection:
Where a deficiency is identified at an existing at-grade road/rail intersection, the following alternative solutions may be considered:

- modify the existing facility through non-structural improvements such as signing, traffic signals, wigwams, railway gates.
- modify grade and/or alignment and/or cross-section.
- provide a grade separation.
- “do nothing”.

b) An Existing Grade Separation: Road/Rail or Road/Road:

At an existing grade separation, the following alternative solutions may be considered:
- increase width over the grade separation
- increase width under the grade separation.
- modify grade separation to an interchange.
- “do nothing”.

c) Water Crossings:
Where a water crossing is necessary for a new roadway, there are very few practical alternatives to the water crossing which can be considered. In exceptional circumstances, where the water body is of such width or has such navigational requirements, a tunnel or a surface water transportation system, such as a ferry, might be considered as alternatives.

A **transportation deficiency specific to a water crossing** site may require the replacement or modification of the existing roadway water crossing or the construction of a new roadway water crossing. Alternative solutions which may be considered are:

Road Deficiencies:
- modify the existing facility through non-structural improvements such as signing or traffic controls
- divert traffic to other existing roads and/or water crossings
- resolve a deficiency elsewhere in the road network
- restrictive traffic signing or closure of the road
- reconstruct the water crossing
- “do nothing”

Hydraulic Deficiencies:
- increase hydraulic capacity
- “do nothing”

B.2.4 Service Facilities

B.2.4.1 Description of the Projects

Projects developed in this group may include the following:

- construction of new patrol yards
- winter maintenance facilities
- parking lots
- weigh scale site

B.2.4.2 Purpose of the Projects

Projects to develop road and traffic service facilities are undertaken to address one or more of the following problems:

- increased road mileage to be maintained.
- existing patrol yards unsuitable, e.g. property limitations, incompatibility with adjacent land uses - inadequate patrol yards and/or facilities.
- inadequate weigh scales.
- inadequate traffic control centres.
- inadequate parking facilities.

B.2.4.3 Alternative Solutions

The above problems or a combination of them could justify the development of a service facility project. Alternative solutions which may be considered are:

- build a new facility.
- increase the capabilities of a nearby facility.
- increase the efficiency of operation of existing facilities.
- utilize mobile or temporary facilities.
- lease commercially available facilities.
- contract out the service function to a commercial enterprise.
- “do nothing”.

B.3 Environment

B.3.1 Description of the Environment

The following section provides an overview of environmental factors to be considered when reviewing existing and future conditions, developing alternatives, and analyzing and evaluating them to determine the preferred alternative.

Although these descriptions are general, the proponent is required to describe the environment to be affected by a specific project in detail including the significant features which comprise each type of environment. It should be noted that potential environmental effects include both positive and negative effects. Review agencies, Indigenous Communities and the public will therefore have an opportunity to understand the specific

environment affected by a given project while it is being planned. The list provided is general and is provided for guidance only. A project specific description of the environment must be developed reflecting the scope of the study area, federal, provincial, and municipal legislation, policies, and agency and public input.

Transportation:

- Existing transportation network
- Future transportation network

Land-Use Planning Objectives:

- Provincial
- Regional
- Municipal

Natural Environment/Natural Heritage Features:

- Natural heritage policies
- Fisheries and aquatic resources
- Vegetation and flora
- Wildlife resources and linkages
- Surface water
- Ground water
- Geotechnical
- Fluvial geomorphology

Social Environment:

- Existing communities
- Existing residential areas
- Recreational facilities
- Noise and vibration
- Air quality
- Aesthetics

Cultural Environment Heritage (Cultural and Archaeological Resources in the Environment):

- Archaeological resources and areas of archaeological potential
- Built heritage resources and cultural heritage landscapes

Indigenous Peoples:

- Reserve lands and traditional land use areas
- Aboriginal and treaty rights
- Archaeological sites
- Land claims

Economic Environment:

- Commercial land-use

- Industrial land-use
- Agricultural land-use

Preliminary cost estimates:

- Capital costs
- Property costs
- Maintenance costs

Other:

- Utilities

B.3.2 Description of the Potential Effects on the Environment

The effects (both positive and negative) on the environment are to be identified and assessed based on the following process:

- Review of existing conditions within the study area.
- Review of future conditions within the study area.
- Assessment of the potential effects that alternatives may have on the factors identified in Section B.3.1.
- Identification of a technically preferred alternative based on the overall net effects.
- Review with affected parties per the requirements of the MCEA.

B.3.3 Mitigating Measures

B.3.3.1 Design

Through the planning and design process described in the MCEA, however, it may be determined that, together with the benefits, certain projects may have some adverse effects on the environment. The MCEA process is intended to identify potential impacts so that, where possible, they can be avoided. In some cases, this may not be possible. In such situations, measures will have to be taken to either minimize or offset such effects. Actions taken to reduce the effects of a certain project on the environment are called “Mitigating Measures”.

During design, the environment affected by a project will be established and the specific net effects identified. The design shall include measures to mitigate the negative effects. Measures which must be taken to minimize the negative effects will be worked out such that the design can be tailored to recognize them. Contract drawings and documents shall include special provisions to ensure the least impact on the environment. Appendix 2 sets out a table showing typical mitigating measures for potential adverse effects on the environment.

B.3.3.2 Construction

This Class EA describes the process by which the various alternatives are analyzed and the most suitable design is chosen. The construction stage presents another set of alternatives as to how the work will be undertaken.

Many projects which undergo the MCEA process will be carried out by contract let by competitive tender, and the contractor is normally the low bidder. The contractor will have estimated his costs and planned his method of operation during the tendering stage, subject to the specifications and special provisions in the contract and any relevant legislation.

Contractors differ in their approach regarding sequence of operation, techniques, methods of operation, type make and size of equipment utilized, and speed of operation. There is, however, a fairly general uniformity in construction operation, being the natural result of economic competition.

Some of these operations have potential for environmental impact, and where these can be anticipated in the design stage, ‘special provisions’ shall be written into the construction package. They shall spell out what can or cannot be done during specific operations. Unforeseen problems that arise during construction shall be addressed on the site, and the proponent’s best judgment used to ensure that changes to the contract do not cause negative environmental impacts.
Staff responsible for inspecting the contractor’s work must be made aware of such provisions, in order to ensure compliance during construction. It shall be the responsibility of the proponent to ensure that inspectors enforce compliance with the environmental provisions, as well as the traditional engineering provisions, of the construction package.

B.3.3.3 Policy and Guidelines

Section A.2.10 provides information on other federal, provincial and municipal legislation that may apply to projects proceeding pursuant to the MCEA. Proponents should review this information and consider it as part of the MCEA process to support compliance with other environmental legislation. Completion of the MCEA process does not relieve the proponent from complying with all applicable legislation, regulations, policies etc. or guarantee the issuance of other permits, approvals authorizations etc. for the project.

Part C – Municipal Water and Wastewater Projects

In fulfilment of the requirements of the EAA, this section provides a broad description of the following with respect to municipal water and wastewater (refers to sewage and stormwater) projects:

- the projects, purpose and alternatives.
- the environment, typical effects and potential mitigating measures.

Section C has been taken, for the most part, directly from the 1993 Class EA for Municipal Water and Wastewater Projects. It should be reviewed in conjunction with the project tables in Appendix 1; typical mitigating measures for potential environmental effects in Appendix 2; and, agency consultation recommendations based on environmental factors in Appendix 3.

The MCEA process, including consultation and documentation, is provided in Part A of this document.

C.1 Key Considerations

C.1.1 Key Considerations

Water and wastewater projects/activities in general are discussed in Section C.2. This section addresses key considerations when developing and assessing alternatives.

When generating and evaluating alternative solutions in Phases 2 and 3 of the MCEA process, the proponent shall bear the following considerations in mind:

1. Land-Use Planning Objectives

Land-use planning objectives refer to the plans and policies identified in provincial plans and municipal Official Plans and Secondary Plans. At a provincial level, key policies/plans include the Provincial Policy Statement (PPS), the *Places to Grow Act*, *2005* and associated Growth Plan(s). See section A.2.10 for more information on other applicable legislation.

The *Planning Act* requires that municipal Official Plans contain “goals, objectives, and policies established primarily to manage and direct physical change and the effects on the social, economic, and natural environment”. The *Planning Act* prescribes a rigorous process by which Official Plans are to be developed and periodically reviewed, including opportunities for extensive public consultation. Once in place, Official Plans are legal documents, and therefore, provide the specific municipal policies and objectives that need to be considered including, but not limited to, those for: urban areas, growth areas/corridors, rural areas, neighbourhoods and residential areas, employment areas, transit and transit-supportive development, commercial, institutional, recreational, natural, open space, agricultural, and special policy areas.

2. Natural Heritage Features

The natural environment includes the following typical elements:

- landforms (including valleylands)
- groundwater
- surface water and fisheries
- terrestrial Vegetation and wetlands
- wildlife and habitat and
- connections provided by, or between these, resources

Within this natural environment framework, significant natural heritage features may be identified at the local, regional, provincial or federal level reflecting municipal, Conservation Authority, provincial or federal designations/policies. Key elements such as valleylands, fish habitat, evaluated wetlands (including Provincially Significant Wetlands), significant portions of the habitat of threatened and endangered species, Areas of Natural and Scientific Interest (ANSI), and Environmentally Sensitive Areas (ESAs) will constitute significant natural heritage features. Woodlands and wildlife habitat may also constitute significant features if certain criteria are met.

Natural heritage features should be identified early in the EA process to determine significant features and potential impacts. Significant natural heritage features should be avoided where possible. Where they cannot be avoided, then effects should be minimized where possible, and every effort made to mitigate adverse impacts.

In most cases, municipalities have specific policies related the protection of the natural environmental. These policies, along with regional, provincial, and/or federal policies should be identified as part of the EA process.

3. Social Environment

The social environment includes existing communities, residential areas and recreational areas. Significant negative impacts to the social environment should be avoided where possible. Where they cannot be avoided, then effects should be minimized where possible, and every effort made to mitigate adverse impacts. Key considerations are the overall community impacts to residential property and access, community facilities and access, recreational facilities and access, pedestrians, cyclists, noise impacts and air quality.

In most cases, municipalities have specific policies related to the protection of the social environment. These policies, along with regional and/or provincial policies should be identified as part of the EA process.

4. Cultural Environment

“Cultural environment” refers to archaeological resources, built heritage resources and cultural heritage resources in the environment. Areas of archaeological potential must be identified in accordance with the *Ontario Heritage Act*. Relevant terms can be found in the glossary.

Significant cultural heritage resources must be conserved. Where significant cultural heritage resources cannot be avoided, adverse impacts are to be mitigated in accordance with provincial and municipal policies, procedures, best practices and guidelines.

5. Indigenous Communities

Proponents proceeding pursuant to the MCEA are required to consult with interested persons and with Indigenous Communities who may be affected by a proposed undertaking. Municipalities are directed to contact the ministry for direction on consultation with Indigenous Communities. For more information, see Part A.3.7.

As part of the assessment process, proponents should consider the potential for the project to impact:

- Reserve lands and/or Indigenous Traditional Land Use Areas
- Aboriginal or treaty rights and claims
- Use of land and resources for traditional purposes
- Aboriginal Peoples' industry and economic opportunities
- Archaeological sites

6. Economic Environment

Economic Environment includes commercial and industrial land uses and activities. It also includes the financial costs associated with the alternatives, including construction, operation, maintenance, and property costs.

7. Property

Significant impacts to property should be avoided where possible. Where they cannot be avoided, the effects should be minimized where possible, and every effort made to mitigate adverse effects. Property impacts include direct impacts on access, parking, and buildings, and indirect impacts such as where relocating property lines would result in the property owner being out of compliance with local standards (e.g. building setback requirements, etc.).

8. Evaluation of Alternative Solutions

When evaluating alternative solutions, the following considerations should be kept in mind:

- Many of the potential alternative solutions may resolve more than one problem.
- The feasibility of the alternative solutions will depend, in part, on the nature and location of the infrastructure, the nature and location of the opportunity and/or problem(s) being addressed, the comparative cost of the alternative solutions, and on the municipality's capacity to finance the extension of services.

C.1.2 Master Plans

Many municipalities undertake Servicing Master Plans to define their long-term servicing objectives as a supplement to water and wastewater needs identified through their Official

Plan development process. A Master Plan integrates existing and future land-use planning and the planning of servicing infrastructure with the principles of environmental assessment planning.

Master Plans build upon the analysis and detailed policies developed through municipal Official Plans. Therefore, it must be recognized that the link between Master Plans and Official Plans is fundamental. An Official Plan is a legal document, developed through a public and legislative process in accordance with the *Planning Act* that contains "goals, objectives and policies established primarily to manage and direct physical change and the effects on the social, economic and natural environment of the municipality". While Official Plans are approved under the *Planning Act,* typically they are developed through a process which applies the principles of EA planning. As such, Official Plans provide a planning and technical basis for undertaking infrastructure environmental assessment studies.

Master Plans are developed through a stakeholder consultation process that involves consultation with the public, government technical agencies, other municipalities, and Indigenous Communities. If developed in accordance with Section A.2.7 of the MCEA, at a minimum, a Master Plan can address Phases 1 and 2 of the MCEA process. As a result, a Master Plan can provide the basis for carrying out follow-up on EA studies of the specific components, including the problem and/or opportunity being addressed and the range of alternatives being considered. Master Plans are discussed in Section A.2.7.

C.1.3 Integration with the *Planning Act*

The MCEA also provides for the opportunity to integrate the requirements of the EAA with the requirements of the *Planning Act* as discussed in Section A.2.9. The key is that the requirements of both Acts must be met.

C.2 Description of the Projects, Purpose and Alternatives

In considering the alternative solutions to water, stormwater management and sewage problems in Phase 2, the proponent shall bear the following in mind:

1. Nonstructural Alternatives

On the premise that structural solutions to infrastructure problems generally may have negative net environmental impacts, proponents should pay particular attention to non-structural solutions in evaluating alternatives.

Such alternatives might, for example, include the imposition of controls on private development (e.g. storm water management policies which require rainwater to be discharged onto the ground rather than into a storm sewer) or controls on resource use (e.g. by-law requirements that prevent the discharge of once-through cooling water taken from municipal supplies). Land use/zoning controls, flood warning/flood proofing/emergency measures, conservation programs, are further examples of "soft" technology measures which may deserve attention.

While these types of alternatives may not be effective in providing adequate solutions to immediate or critical sewage, stormwater management or water problems, they should be given serious consideration. Where possible, they should be implemented in combination with structural measures if it can be demonstrated that they can contribute to the overall solution. For example, improved maintenance activities may allow a reduction in the size of a structural measure resulting in less environmental impact.

Consideration of such alternatives would serve to **focus a municipality's responsibility for the wise management of the resources under its jurisdiction**, in a manner which would avoid the development of infrastructure problems **through preventative or non-structural measures**.

2. Existing Servicing Conditions

Since sewage and water servicing are often inter-related, proponents should carefully consider **existing servicing** in the project study area when **defining the problem** and when **evaluating alternatives**.

3. The "Do Nothing" Alternative

The "Do Nothing" alternative examines what may happen if none of the alternatives under consideration are carried out and should be considered by the proponent in all cases. The "Do Nothing" alternative assists project participants by providing a benchmark against which the consequences of the other alternatives can be measured.

C.2.1 Water Projects

C.2.1.1.Description of the Projects

Projects planned under the MCEA can generally be categorized as:

- new water systems.
- expansions to existing water systems.
- upgrading of existing water systems.

A **new water system** refers to a project which may include a water source, treatment plant and/or distribution system.

Expansion of an existing water system refers to the addition of new equipment or facilities or through improvements to operations and management activities to increase system capacity.

Upgrading an existing water system consists of additions or replacements to existing equipment or facilities or changes in management practices which are intended to achieve a higher level or improved quality of system performance, while not increasing system capacity.

The following are typical components of a water system:

- source
- treatment
- distribution
- storage

The **source of water** for a community may be either from a surface water body such as a lake or river, in which case an intake extends into the water body; or from a groundwater aquifer, in which case the water is pumped from a well or wells. Many municipal water systems utilize both surface water and ground water. In addition, individual properties may be served by individual wells.

The quality of the source of water supply is what mainly determines the degree and type of treatment necessary. Where the community draws its water from a surface water source, treatment will be necessary because surface water contains bacteria and may be turbid, coloured or contain algae or other organics, or may suffer some other quality defect. Where the community is serviced by a communal well or wells drawing on groundwater supplies, treatment may or may not be necessary, (other than a mandatory requirement for disinfection.)

The **treatment component** will typically comprise a water treatment facility within which the incoming water is treated and pumped into the distribution system. Treatment may occur at a central pumping station or may occur at other points throughout the system where water is added, for example, at individual wells. The treatability of raw water from available water supply sources to achieve drinking water quality objectives will be the main environmental concern.

The water **distribution component** for communal systems will consist of watermains and may also include booster pumping stations.

Water Storage Facilities will be connected to the distribution system and may be for the purposes of pressure equalization and/or ensuring adequate flows for the peak hour water demand and for firefighting. These facilities may be underground tanks, above-ground tanks or elevated tanks.

The development and implementation of a project under this Class EA will often involve additional work and activities incidental to the primary purpose of the project, but which must be included in the project. These may include, for example:

- construction of new facilities or additions to existing facilities such as impoundments, settling tanks, pipe galleries and buildings.
- acquisition of additional land to house the facilities, either at existing sites or new locations
- extensions of existing easements or utility corridors for watermains.
- acquisition of additional land to maintain the appropriate “buffer zone” between adjacent uses and a water treatment plant, booster pumping station or storage facility.

C.2.1.2 Purpose of the Project

Projects developed under the MCEA will be undertaken to address problems affecting the operation and efficiency of existing water systems, to accommodate future growth of communities or to address water source contamination problems.
One or more of the following general objectives will be achieved:

a) eliminate or reduce risk of public health problems or nuisances
b) improve the quality of water
c) expand the capacity of the system
d) improve system efficiency
e) prevent system failure
f) improve disposal of treatment wastes

The purpose or objective of a specific project will be determined by existing or anticipated problems affecting operation and efficiency and the present or forecast demand for increased system capacity.

The following describe typical problems and demands which may arise:

a) Public Health:
The well-being of human life may be affected by or nuisances may be caused by such problems as:

- groundwater or surface water pollution
- contamination of the water through the distribution system
- noise resulting from the operation of the water treatment plant or booster pumping stations
- inadequate treatment of raw water

b) Water Quality:
Water may not conform to the regulated or required water quality objectives as a result of such factors as:

- contamination of a distribution system
- deterioration in quality of the water source
- change in Ministry policies and guidelines for drinking water quality objectives
- inefficient operation of the water treatment plant
- outdated original design and/or construction of the water treatment plant

c) System Capacity:
The existing water system may not be able to supply the quantities of water required, or to supply water at the required pressure due to such factors as:

- escape of water exfiltration / leakage from the water distribution network
- deterioration in the condition of the distribution system
- outdated original design and/or construction of the system
- system unable to meet new demands since it is at or very near to its original design capacity
- failure of the water source

- changes in design philosophy which affect capacity requirements

d) System Efficiency:
Various facets of system efficiency such as labour, maintenance costs or energy consumption may be improved by design improvements and/or the introduction of new technology.

The system may be considered inefficient for various reasons including:
- increased cost of maintaining existing equipment.
- increased energy consumption.
- equipment does not meet performance specifications
- outdated original design of system.

e) Potential System Failure:
Concern may be expressed as to potential system failure due to such factors as:

- deterioration of system components due to age.
- repeated equipment breakdown over time.
- evidence of structural failure over time.
- outdated original design and/or construction of the system.

f) Disposal of Treatment Wastes:
The existing water treatment plant may exhibit problems related to the disposal of wastes generated, which may be attributed to:
- frequency of backwashing to maintain drinking water quality objectives.
- changes in Ministry policies and guidelines with respect to disposal of chemical biosolids and backwash water.

C.2.1.3 Alternative Solutions

In many instances, there may be more than one way of solving problems or meeting new demands for system requirements. A number of solutions, termed “Alternative Solutions” may include, for example:
a) New water system
b) Expansion or upgrading of existing water system
c) Modifying operational practices at water treatment plant
d) Expanding maintenance program
e) Reducing water demand
f) Obtaining water from another source
g) Limiting community growth
h) “Do nothing”

In evaluating alternative solutions the following factors should be kept in mind:
- A water system consists of inter-related components. Therefore, many of the potential alternative solutions may resolve more than one of the general problems previously described.

- The feasibility of the alternative solutions will depend, in part, on the nature and location of the water system, the nature and location of the problem(s), the comparative cost of the alternative solutions, the pressures for growth, and on the municipality capacity to finance the extension of services.

For the alternative solutions identified above, a number of possible options are suggested:

a) New Water System:

- limit growth
- expand existing water system
- use individual wells for each property

b) Expand or Upgrade Existing System:

- limit growth
- improve operation and maintenance of existing system
- establish new water system
- replace/reconstruct existing system

c) Modify Operational Practices at the Water Treatment Plant:

- limit operating hours of noisy equipment to reduce sound level impacts on adjacent residents and uses.
- ensure that the operator of the water treatment plant is following proper procedures to adhere to the required degree of treatment.
- optimize operational procedures at the water treatment plant by altering equipment operation and chemical addition.
- undertake training programs to upgrade the operator's understanding of treatment procedures and Ministry policies, guidelines and practices.
- modify operational procedures and/or processes to reduce the quantities of backwash wastewater or chemical biosolids requiring disposal.
- modify water quality monitoring program.

d) Expand Maintenance Program:

- increase frequency of "flushing-out" and cleaning of the distribution system to improve hydraulic capacity and water quality.
- undertake maintenance activities such as, (i) equipment overhaul and replacement of faulty or damaged parts, and (ii) locate and repair faults causing contamination in the water distribution component.
- trace and monitor leakage in the water distribution system and undertake a program for its reduction.

e) Reduce Water Demand:

- initiate a water conservation program to educate both the general public and industrial users of ways to reduce water usage.
- adopt a municipal by-law directed at reducing water usage.
- install individual water meters at each point of water usage and charge on the basis of volume used rather than a flat rate.

f) Obtain Water from Another Source:

- provide for extension of watermains from another municipality into that part of the community requiring additional supply.
- abandon existing water source and extend watermains from another municipality into the needy community.
- abandon existing groundwater/surface water source and develop new water source and treatment at new groundwater/surface water source.

g) Limit Community Growth:

- limit the ultimate extent and/or location of proposed residential, industrial and commercial growth in the community.
- phase or schedule proposed growth in the community with respect to both locations and implement timing.

h) Do Nothing:

In the "Do Nothing" alternative, no improvements or changes would be made to solve the identified problem(s). This means that the problem(s) would remain in the system. It does not necessarily mean however, that no further development in the community would occur.

The "Do Nothing" alternative will be documented in the ESR along with any other alternative solutions.

The "Do-Nothing" alternative may be implemented at any time during the design process prior to the commencement of construction. A decision to "Do Nothing" would typically be made when the costs of all other alternatives, both financial and environmental, significantly outweigh the benefits.

C.2.2 Sanitary Sewage Projects

C.2.2.1 Description of the Projects

Projects planned under this Class EA can generally be categorized as:

- new sanitary sewage systems.
- expansions to existing sanitary sewage systems.
- upgrading of existing sanitary sewage system.

A **new sanitary sewage system** may include a sanitary sewage collection system, flow equalization facilities, a treatment plant, biosolids management facilities and effluent outfall/discharge/disposal facilities, and storage facilities.

Expansion to an existing sanitary sewage system refers to the addition of new equipment or facilities or through improvements to operations and maintenance activities to increase system capacity.

Upgrading of an existing sanitary sewage system consists of additions or replacements

to existing equipment or facilities or changes in management practices which are intended to achieve a higher level or improved quality of system performance, while not increasing system capacity.

Sanitary Sewage System Components:
A typical sanitary sewage system may commonly include all or some of the following components:

- collection
- treatment
- effluent disposal
- management of biosolids
- storage

The **collection component** of a sewage system collects raw sewage from a source and delivers it to the treatment component via one or more of the following:

- gravity sewers
- vacuum lines
- pumping stations
- forcemains

The **treatment component** consists of one or more of the following facilities:

- forcemains
- an individual septic tank and tile field (servicing one building).
- a communal septic tank(s) and tile field(s) (servicing a number of buildings).
- a lagoon or waste stabilization pond.
- a sewage treatment plant (STP).
- effluent outfall (may include diffuser and/or mixing zone).

Each of the above treatment facilities uses different processes and also produces wastewater effluent and biosolids.

The **effluent disposal component** consists of one or more of the following facilities or practices:

- outfall sewer (to surface water body receiver).
- diffusers and/or mixing zone (in surface water body receiver).
- disposal on land by spray irrigation and/or snow effluent.
- subsurface disposal tile field.
- infiltration lagoon (to ground water body receiver).

The **biosolids component consists** of one or more of the following facilities or practices:

- disposal of biosolids at a sanitary landfill site.
- disposal of biosolids by burning it in an incinerator.
- utilization of biosolids by applying it to soil conditioning sites (agricultural fields).
- utilization of biosolids by composting.
- a biosolids transfer station to store biosolids on a temporary basis.

The **storage component** consists of one or more of the following facilities:

- flow equalization facility.
- lagoon systems.
- storage for combined sewage overflow.

An expansion or upgrading project may include the construction of one or more of the following facilities:

- sewers (gravity sewer, vacuum line, forcemain).
- pumping stations.
- communal septic tanks and/or tile fields.
- sewage treatment plants.
- lagoon systems.
- facilities for the disposal or utilization of biosolids.
- flow equalization facility.
- storage (e.g. for combined sewage overflow).

The development and implementation of a project proceeding through the MCEA will often involve additional work and activities incidental to the primary purpose of the project but which must be included in the project. These may include, for example:

- construction of new facilities or additions to existing facilities such as settling or aeration tanks, incinerators and buildings.
- acquisition of additional land to house the facilities, either at existing sites or new locations.
- extension and/or widening of existing sewer easement or utility corridor.
- acquisition of additional land to maintain the appropriate “buffer zones” between adjacent uses and the treatment facilities.

C.2.2.2 Purpose of the Project

Projects proceeding through the Class EA will be proposed to resolve problems affecting the operation and efficiency of existing systems, and/or to accommodate future growth of communities, or to alleviate specific pollution problems.

One or more of the following general objectives will be achieved:

a) Eliminate or reduce risk of public health problems or nuisances.
b) Improve the quality of effluent produced by the existing sewage system.
c) Improve the management of biosolids waste produced by the system.
d) Expand the capacity of the sewage system to solve existing problems or to accommodate future growth.
e) Improve system efficiency.
f) Prevent system failure.

The purpose or objective of a specific project will be determined by existing or anticipated problem(s) affecting the operation and deficiency of the system, and the present or forecast demand for increased system capacity.

The following are descriptions of the types of problems and demands identified above:

a) Public Health:
The well-being of human life may be affected, or nuisances may be caused, by such problems as:

- contamination of groundwater supply or surface water supply used for human consumption, livestock watering, recreation or irrigation
- failure of the system resulting in the backup of raw sewage through the sewers into basements
- failure to meet air quality requirements at biosolids incinerators
- odour from the sewage treatment facilities or from a biosolids transfer station
- noise from operation of a pumping station or sewage treatment plant
- traffic hazards, nuisance or noise from trucking of biosolids.
- bypassing of sanitary sewage flows at a treatment plant or pumping station during periods of high flow

b) Effluent Quality:
The objectives for water quality include criteria governing the physical and inorganic characteristics of water bodies (e.g. temperature, dissolved oxygen, chlorine, phosphorous), microbiological criteria and the allowable concentration of all parameters that may cause an impact to receiving water quality. The quality of the effluent produced by a sewage treatment plant must be adequate to ensure that the minimum standards set for the receiving water body or for land disposal can be consistently achieved.

It is the responsibility of the proponent to assess, or to confirm, the assimilative capacity of the receiver, derive effluent quality criteria from this assessment (concentrations and loadings) and have them confirmed by the Ministry. This shall be done in the earliest stages of the planning and design process and the results should serve as the basis for comparison of alternative solutions.

The rationale for an expansion or upgrading project, based on the effluent quality criteria may be due to such problems as:

- inefficient operation of the treatment facility
- outdated original design of the system
- original design criteria are no longer acceptable
- industrial waste discharged contains chemicals toxic to the biological treatment process used in the treatment facility
- changes in policies and guidelines for sewage treatment processes and for the receiving water body
- changes in the physical and chemical characteristics of the influent due to sewer discharges and/or infiltration/inflow into the sewer system
- assimilative capacity of the receiving water body

c) Management of Biosolids:
The need for the project may result from problems such as:

- the sanitary landfill site(s) at which biosolids are currently being disposed of may be at or near capacity
- the agricultural lands or soil conditioning sites at which biosolids are utilized may be at or near capacity
- the constituents of the biosolids may make them unacceptable for disposal/utilization at existing available sites
- Ministry policies or guidelines for biosolids disposal/utilization may have changed.
- changes in agricultural practices making land unavailable for spreading biosolids.
- cost of haulage of biosolids to a distant landfill site may be prohibitive.
- biosolids incinerator may be at or near capacity.

d) System Capacity:
The existing sewage system may not be capable of handling present or forecast volumes of sewage due to such problems as:

- system is at or approaching its original design capacity and cannot accommodate increased volumes of sewage
- outdated original design or construction of the system
- deterioration in the condition of the collection system
- infiltration of groundwater into the collection system
- illegal connections into the collection system
- changes in design philosophy

e) System Efficiency:
Various facets of system efficiency such as labour, maintenance costs or energy consumption may be improved by design improvements and/or the introduction of new technology, by plant optimization, process audit and real time control.

f) Potential System Failure:
Concern may be expressed as to potential system failure due to such factors as:

- deterioration of system components due to age.
- structural failure of system components.
- deterioration due to chemical attack.
- repeated equipment breakdown
- outdated original design and/or construction of the system.

C.2.2.3 Alternative Solutions

There may be a number of ways of solving problems, of meeting new demands on existing sewage systems. A number of solutions, termed “Alternative Solutions”, may include, for example:

a) New sanitary sewage system.
b) Expansion or upgrading of existing sanitary sewage system.
c) Rehabilitate existing sanitary sewage system.
d) Modify operational practices at the treatment facility.
e) Expand maintenance program.
f) Improve individual septic systems.

g) Reduce sewage flows.
h) Reduce industrial discharge.
i) Improve combined sewer system control.
j) Alter current biosolids management practices.
k) Limit community growth.
l) Discharge to an adjacent existing sewage system.
m) Construct a new sewage/lagoon treatment facility.
n) “Do Nothing”.

In evaluating Alternative Solutions the following factors should be kept in mind:

- A sewage system consists of a series of inter-related components. Therefore, many of the potential alternative solutions may resolve more than one of the general problems previously described.
- The feasibility of the alternative solutions will depend, in part, on the nature and location of the sewage system, the nature and location of the problem(s), the assimilative capacity of the receiver, the comparative cost of the alternative solutions, the pressures for growth and the municipality’s capacity to finance the extension of services.

For the alternative solutions identified above, a number of possible options are suggested:

a) New Sanitary Sewage System:

- limit growth
- expand existing sanitary sewage system
- use individual septic tanks for each property

b) Expansion or Upgrading of Existing System:

- limit growth
- improve operation and maintenance of existing system
- establish new sanitary sewage system
- management of peak flows by providing on-line storage

c) Rehabilitate Existing Sanitary Sewage System:

- reline and/or seal existing sewers
- reconstruct existing sewers
- improve operation and maintenance of existing system
- modify drainage area
- management of peak flows by providing on-line storage

d) Modify Operational Practices at the Treatment Facility:

- limit operating hours of noisy equipment to reduce sound levels
- reschedule the timing for, or haulage routes of, trucks removing biosolids from the treatment facility to minimize traffic and safety problems in residential areas
- alter quantities of biosolids stored at the treatment facility and/or duration of biosolids storage to minimize odour problems
- alter timing or duration of land treatment

- audit process and optimize operational efficiency
- undertake training programs to upgrade operator's understanding of treatment procedures and Ministry policies, guidelines and practices
- real time control of treatment processes

e) Expand Maintenance Program:

- clean the sewage system to improve treatment efficiency and hydraulic characteristics.
- undertake maintenance activities such as equipment overhaul, replacement of parts, repair of damaged tanks.

f) Improve Individual Septic Systems:

- repair, clean and enlarge existing septic tanks and/or tile fields.

g) Reduce Sewage Flows:

- enforce municipal by-laws with respect to permitted connections to the sewage collection system e.g. sever illegal roof drains and weeping tiles.
- maintain the collection system to minimize groundwater infiltration and stormwater in-flow into the sewers.
- initiate a community water conservation program in order to reduce overall sewage volumes.

h) Reduce Industrial Discharge:

- adopt a sewer use by-law in the municipality to set criteria for the quality of industrial sewage discharge.
- amend existing sewer use by-law in order to require pretreatment of sewage at industrial plants.
- amend existing sewer use by-law in order to require process changes in industrial plants.
- appoint an Industrial Waste Inspector and ensure that violations of the by-law are sought out and the by-law is vigorously enforced.

i) Improve Combined Sewer System Control:

In situations where combined sewers exist, the following alternatives may be considered:

- provide or expand temporary or permanent surface runoff storage facilities to accommodate "wet weather" peak surface run-off flows, e.g. in ponds, swales, fields, parking lots, roof tops, parks
- install inlet controls, as part of normal maintenance activities, to prevent surcharge of combined sewers during "wet weather" peak run-off periods
- improve street maintenance program (i.e. cleaning, removal and disposal of debris) to minimize grit and solids entering combined sewers
- improve sewer maintenance program (e.g. sewer flushing, catch basin cleaning) to minimize grit, solids and slime being by-passed by combined sewer overflows
- install stationary or automatic flow regulators to utilize available storage capacity in an existing system

j) Alter Current Biosolids Management Practices:

- utilize alternative chemicals or quantities of chemicals and/or chemical dosing methods to change characteristics of biosolids thereby making it acceptable for disposal utilization
- maintain or improve biosolids dewatering equipment to increase process efficiency and reduce biosolids volume
- alter the application rate of biosolids disposal at existing landfill site(s)
- alter the application rate of biosolids utilized on existing agricultural land
- alter the quantity of biosolids stored on a contingency basis in existing facilities at the treatment plant or transfer stations, in order to resolve scheduling problems at disposal or utilization sites
- construct a new biosolids incinerator to complement/ substitute for existing disposal/utilization methods
- improve the operating efficiency of an existing biosolids incinerator

k) Limit Community Growth:

- limit the ultimate extent and/or location of proposed residential industrial and commercial growth in the community.
- phase or schedule proposed growth in the community with respect to both location and implementation timing.

l) Discharge to an Adjacent Existing Sewage System:

- discharge sewage from existing or proposed development into an existing sewage system located in an adjacent municipality.

m) Construct A New Sewage/Lagoon Treatment Facility:

- construct a new sewage treatment plant within an existing collection and treatment system to replace or supplement an existing sewage treatment plant or lagoon treatment facility.
- construct a new lagoon treatment facility to supplement or replace an existing communal and/or subsurface disposal system.

n) “Do Nothing”:

In the “Do Nothing” alternative, no improvements or changes would be made to solve the identified problem(s). This means that the problems would remain in the system.

It does not necessarily mean however, that no further development in the community would occur. The “Do Nothing” alternative shall be documented in the ESR along with any other alternative solutions which were examined.

The “Do Nothing” alternative may be implemented at any time during the design process prior to the commencement of construction. A decision to “Do Nothing” would typically be made when the costs of all other alternatives, both financial and environmental, significantly outweigh the benefits.

C.2.3 Stormwater Management Projects

C.2.3.1 Description of the Projects

Stormwater management projects proceeding pursuant to the MCEA can generally be categorized as:

- new storm sewer systems.
- expansions to existing storm sewer systems.
- upgrading of existing storm sewer systems.
- watercourse management projects.
- stability projects.

A **new storm sewer system** may include a stormwater collection system, treatment facility(ies), an outfall/discharge/re-use/disposal facility and storage facilities.

An **expansion to an existing storm sewer system** refers to the addition of sewers and new facilities or a change in management practices to an existing sewage system to increase system capacity.

Upgrading of an existing storm sewer system consists of additions or replacements to existing sewers and facilities or implementation of practices which are intended to modify flow, volume and/or quality control.

Watercourse management projects are intended to minimize the impacts of flooding, erosion and bank and valley wall instabilities.

NOTE:
Drainage works regulated under the **Drainage Act are exempt** from the EAA in accordance with Reg. 334 made under the EAA.

Where stormwater works are carried out in conjunction with municipal road works, they shall be planned in accordance with the requirements of the schedules for but may be included in documentation prepared for the schedules for municipal road projects.

Storm Sewer System Components:
A storm sewer system will consist of the following basic components:

- collection system.
- stormwater management and/or treatment facilities.
- management of waste e.g. catch basin cleanings retention/detention basin solids, dredging.

The **collection system** collects storm drainage from such sources as private drains, road storm sewers, catch basins, ditch inlets and culverts, and conveys it to a **trunk storm sewer and/or channel**, which in turn conveys it to receiving waters and/or a treatment facility.

Receiving waters and watercourses include but are not restricted to: overland flow routes, ditches, channels, intermittent or continuous streams and creeks, and rivers and lakes.

Stormwater management and/or treatment facilities include storage and other means to achieve hydrograph attenuation, volume reduction and/or to treat and address the quality of stormwater run-off. Storage may be provided by underground chambers, roofs, parking lots and detention/retention ponds together with their outlet control structures and outfalls. Stormwater volume may be reduced by enhancing infiltration by providing infiltration wells, pipes and trenches.

Water quality control may consist of one or more of the following:

- monitoring of stormwater quality parameters such as temperature, dissolved oxygen, bacterial counts, suspended solids and nutrients
- treatment such as infiltration, disinfection, sedimentation, biological uptake, screening and vortex sedimentation
- screening

An **expansion or upgrading project** may include the construction of one or more of the following:

- extension/expansion of collection system
- pumping stations
- stormwater channel improvements
- stormwater management/treatment facilities
- facilities for the disposal or utilization of solids/wastes
- storage (retention/detention)
- addition of control works such as weirs, dams, hydraulic brakes and other flow-limiting devices

Watercourse Management projects consist of works located in open watercourses and may include flood control erosion control water quality control and works related to aquatic, wildlife and terrestrial management within a floodplain

Stability Projects consist of cut and fill works in floodplains and works required to stabilize banks and valley walls where instability is not caused by watercourse flow.

The development and implementation of a project pursuant to the MCEA will often involve additional work or activities incidental to the primary purpose of the project but which must be included in the project. These may include, for example:

- extension or widening of existing sewer easements or utility corridors.
- acquisition of additional land for stormwater management facilities.

C.2.3.2 Purpose of the Project

Projects developed under this Class EA will be proposed to resolve problems affecting the operation and efficiency of existing systems and/or to accommodate future growth of communities, and/or to alleviate flooding or specific pollution problems.

One or more of the following general objectives will be achieved:

a) Alleviate local or regional flooding problems
b) Eliminate or reduce risk of public health or safety problems or nuisances
c) Improve the quality of effluent produced by the stormwater system
d) Expand the capacity of the stormwater system
e) Improve system or treatment efficiency
f) Prevent system failure
g) Control, erosion and sedimentation
h) Maintain baseflow or groundwater recharge
i) Reduce combined sewer overflows
j) Management of wastes produced by the system

The purpose or objective of a specific project will be determined by existing or anticipated problem(s) affecting operation and efficiency of the system, and the present and forecast demand for increased system capacity and/or improved water quality.

Following are descriptions of the types of problems and demands identified above:

a) Local or Regional Flooding:
Flooding caused by system deficiencies, alteration of land use characteristics and/or incidence of low frequency storms, may result in the following problems:

- loss of life.
- serious property damage.
- economic business loss.
- damage or interruption of municipal services.
- degradation of agricultural or recreational lands.

b) Public Health and Safety:
The well-being of human life may be affected, or nuisances may be caused, by such problems as:

- contamination of groundwater supply or surface water supply used for human consumption, livestock watering, recreation or irrigation
- failure of the system resulting in the backup of sewage through the sewers into basements
- inadequate water quality control at stormwater management facilities
- unsafe conditions resulting from high flows, velocities or depths in open channels, detention ponds or other facilities accessed by the public

c) Effluent Quality:
The objectives for water quality include criteria governing the physical and chemical characteristics of water bodies, (e.g. temperature, dissolved oxygen, suspended solids, grease, salts, chlorides, nutrients), microbiological criteria, and the allowable concentration of all parameters that may cause impact to receiving water quality. The quality of the effluent produced by storm sewage systems should ensure that minimum standards set for receiving water bodies are consistently achieved.

The rationale for an expansion or upgrading project may, therefore, be based on the current or forecast quality of effluent produced, due to such problems as:

- inefficient operation of the stormwater management facility
- outdated original design or construction of the system.
- original design criteria are no longer acceptable.
- changes in policies and guidelines for stormwater management.
- changes in the physical and chemical characteristics of the receiving water body due to upstream discharges.
- insufficient assimilative capacity of the receiving water body.
- degraded receiving water body.

d) System Capacity:
The existing storm sewage system may not be capable of handling present or forecast flows or volumes of stormwater due to such problems as:

- system is at or approaching its original design capacity and cannot accommodate increased flows or volumes of stormwater
- outdated original design or construction of the system
- deterioration in the condition of the collection system
- infiltration of groundwater into the collection system
- illegal connections into the collection system
- changes in design philosophy
- changes in drainage area and land use characteristics

e) System Efficiency.
Various facets of system efficiency such as labour, maintenance costs or energy consumption may be improved by design improvements and/or the introduction of new technology.

f) Potential System Failure:
Concern may be expressed as to potential system failure due to such factors as:

- deterioration of system components due to age
- structural failure of system components
- erosion of streams and channels
- outdated original design or construction of the system
- degraded receiving waters
- changes in flow/quality of stormwater run-off

g) Erosion and Sedimentation:
Either in association with the construction of a project, and/or caused by natural processes and/or development pressures, erosion and-sedimentation may result in the following problems:

- serious property damage
- damage or interruption of private and municipal services
- degradation of terrestrial habitat

- degradation of aquatic habitat and fisheries resources
- upstream/downstream flooding problems

h) Baseflow or Groundwater Recharge:
In areas of natural groundwater recharge, sprawling development and urbanization can threaten the continued replenishment of groundwater by precipitation and surface run-off.

The following are examples of the kinds of problems which may result:
- lowered water table on local or regional scale, affecting the surface ecosystem
- reduced groundwater supplies to municipal well systems
- reduced groundwater flows to streams, thus reducing dilution qualities downstream
- reduced groundwater contribution to watercourses, thus affecting peak flow, base flow and temperature characteristics important to aquatic and terrestrial habitats and fisheries resources

i) Combined Sewer Discharges:
During wet weather conditions, stormwater run-off combines with sanitary sewage in combined sewers. Typical problems which result are:
- sewers function at, or over, capacity during times of wet weather flows, causing basement flooding.
- dilution of flows make treatment more difficult and less effective.
- excessive by-passing of sewage at treatment plant to receiving water bodies.
- sewer overflow to receiving water body.

j) Management of Wastes:
Failure to remove or control gravel, sand, road salt and other debris which accumulate in catch basins, retention/detention ponds, roadside ditches and in storm sewers may result in the following problems:
- degraded water quality in catch basin sumps.
- impacts on water quality of receiving water body.
- obstruction/blockage in storm sewer system causing back-ups and flooding.
- reduction in volume of retention/detention ponds.
- reduction in groundwater recharge from ponds

C.2.3.3 Alternative Solutions

There may be more than one way of solving problems or of meeting new demands on existing stormwater management systems. A number of solutions, termed “Alternative Solutions”, may include, for example:
a) New storm sewage system.
b) Expansion or upgrading of an existing storm and/or combined sewage system.
c) Rehabilitate existing storm sewage system.
d) Expand sewer cleaning program.
e) Expand street cleaning program.
f) Remove illegal drain connections.
g) Require stormwater management.

h) Limit Community growth.
i) Establish a sewer use by-law.
j) Control and/or treat combined sewer flow.
k) Manage system wastes.
l) “Do Nothing”.

Depending on the nature of the existing stormwater management system, and on the problems being encountered or anticipated, there are various ways in which these general alternatives could be carried out. The most common of these are described below.

In evaluating the Alternative Solutions the following factors should be kept in mind:

- a stormwater management system comprises a series of components.
- the feasibility of the alternative solutions will depend in part, on the nature and location of the stormwater management system, the nature and location of the problem(s), the comparative cost of the alternative solutions, the pressures for growth, and the municipality’s capacity to finance extensions of services.

For the alternative solutions identified above, a number of possible options are suggested:

a) New Storm Sewage System:

- limit growth
- expand existing storm sewage system

b) Expansion or Upgrading of Existing System:

- limit growth.
- improve operation and maintenance of existing system.
- establish new storm sewage system.
- install flow regulators to utilize storage capacity in existing sewage system.

c) Rehabilitate Existing Storm Sewage System:

- reconstruct/reline existing storm sewers.
- reshape/realign existing stormwater ditches/channels.
- add stormwater treatment facility.

d) Expand Sewer Cleaning Program:

- increase frequency of removal of debris and sediment from catch basins, manholes, inlet structures
- undertake regular, scheduled dragging, flushing and cleaning of the storm sewer system.

e) Expand Street Cleaning Program:

- carry out regular, scheduled cleaning of the street system to improve stormwater quality
- undertake normal maintenance and repair activities on the storm sewage system.

f) Remove Illegal or Undesirable Drain Connections:

- separate roof leaders and weeping tiles from storm drains
- disconnect illegal sanitary sewer connections from storm drains
- plug or disconnect floor drains from storm sewer systems

g) Require Stormwater Management:

- provide or expand temporary or permanent surface runoff management facilities e.g. in ponds, swales, fields, parking lots, roof tops, parks.
- develop artificial/constructed, or utilize natural, wetlands to improve quality of stormwater discharges.
- ensure that approvals for new developments require the incorporation of urban surface run-off control measures, (e.g. on-site stormwater retention), minimization of impervious areas, appropriate lot grading, discharge of roof drains into cisterns, infiltration trenches or onto grassed areas to maximize ground water recharge.
- ensure that approvals for major phased development be based on comprehensive sub-watershed plans.
- for existing systems develop a comprehensive pollution prevention and control strategy for the community as part of an overall strategy for the municipality.
- for both new and existing systems ensure that appropriate infrastructure policies are included in the municipal Official Plan.

h) Limit Community Growth:

- limit the ultimate extent and/or location of proposed residential, industrial and commercial growth in the community.
- phase or schedule proposed growth in the community with respect to both location and implementation timing.

i) Establish a Sewer Use By-law:

- adopt a sewer use by-law in the municipality to set criteria for stormwater quality and storm sewer use.
- amend existing sewer use by-law to reflect current or improved criteria.
- ensure that violations of the by-law are sought out and the by-law is vigorously enforced.

j) Control and/or Treat Combined Sewer Flow:

- disconnect catch basins and reconnect to separate new or existing storm sewer.
- provide sewer separation.
- provide storage for treatment of combined sewer flows.
- provide high-rate treatment for combined sewer flows.
- increase hydraulic capacity at sewage treatment plant.

k) Manage System Wastes:

- improve storm sewer inspection and cleaning program.
- increase frequency of catch basin cleaning.
- proper disposal of catch basin cleanings/wastes.
- improve street sweeping program especially in early Spring.

- undertake roadside debris clean-up.
- remove and dispose of sediments from retention/detention ponds.

l) "Do Nothing":
In the "Do Nothing" alternative, no improvements or changes would be made to solve the identified problem(s). This means that the problems would remain in the system. It does not necessarily mean however, that no further development in the community would occur.

The "Do Nothing" alternative shall be documented in the Environmental Study Report along with any other alternative solutions which were examined.

The "Do Nothing" alternative may be implemented at any time during the design process prior to the commencement of construction. A decision to "Do Nothing" would typically be made when the costs of all other alternatives, both financial and environmental, significantly outweigh the benefits.

C.3 Environment

C.3.1 Description of the Environment

The following section provides an overview of environmental factors to be considered when reviewing existing and future conditions, developing alternatives, and analyzing and evaluating them to determine the preferred alternative.

Although these descriptions are general, the proponent is required to describe the environment to be affected by a specific project in detail including the significant features which comprise each type of environment. It should be noted that potential environmental effects include both positive and negative effects. Review agencies, Indigenous Communities and the public will therefore have an opportunity to understand the specific environment affected by a given project while it is being planned. The list provided is general and is provided for guidance only. A project specific description of the environment must be developed on a project-specific basis reflecting the scope of the study area, federal, provincial, and municipal legislation, policies, and agency and public input.

Water or Wastewater:
- Existing water and/or wastewater systems
- Future water and/or wastewater systems

Land-Use Planning Objectives:
- Provincial
- Regional
- Municipal

Natural Environment/Natural Heritage Features:
- Natural heritage policies
- Fisheries and aquatic resources

- Vegetation and flora
- Wildlife resources and linkages
- Surface water
- Ground water
- Geotechnical
- Fluvial geomorphology

Social Environment:

- Existing communities
- Existing residential areas
- Recreational facilities

Cultural Environment Heritage (Cultural and Archaeological Resources in the Environment):

- Archaeological resources and areas of archaeological potential.
- Built heritage resources and cultural heritage landscapes.

Indigenous Peoples

- Reserve lands and traditional land use areas
- Aboriginal and treaty rights
- Archaeological sites
- Land claims

Economic Environment:

- Commercial land-use
- Industrial land-use
- Agricultural land-use

Preliminary cost estimates:

- Capital costs
- Property costs
- Maintenance costs

Other:

- Utilities

C.3.2 Description of the Potential Effects on the Environment

The effects (both positive and negative) on the environment are to be identified and assessed based on the following process:

- Review of existing conditions within the study area.
- Review of future conditions within the study area.
- Assessment of the potential effects that alternatives may have on the factors identified in Section C.3.1.
- Identification of a technically preferred alternative based on the overall net effects.

- Review with affected parties per the requirements of the MCEA.

C.3.3 Mitigating Measures

C.3.3.1 Design

Through the planning and design process described in the MCEA, however, it may be determined that, together with the benefits, certain projects may have some adverse effects on the environment. The MCEA process is intended to identify potential impacts so that, where possible, they can be avoided. In some cases, this may not be possible. In such situations, measures will have to be taken to either minimize or offset such effects. Actions taken to reduce the effects of a certain project on the environment are called “Mitigating Measures”.

During design, the environment affected by a project will be established and the specific net effects identified. The design shall include measures to mitigate the negative effects. Measures which must be taken to minimize the negative effects will be worked out such that the design can be tailored to recognize them. Contract drawings and documents shall include special provisions to ensure the least impact on the environment. Appendix 2 sets out a table showing typical mitigating measures for potential adverse effects on the environment.

C.3.3.2 Construction

This Class EA describes the process by which the various alternatives are analyzed and the most suitable design is chosen. The construction stage presents another set of alternatives as to how the work will be undertaken.

Many projects which undergo the Class EA planning process will be carried out by contract let by competitive tender, and the contractor is normally the low bidder. The contractor will have estimated his costs and planned his method of operation during the tendering stage, subject to the specifications and special provisions in the contract and any relevant legislation.

Contractors differ in their approach regarding sequence of operation, techniques, methods of operation, type make and size of equipment utilized, and speed of operation. There is, however, a fairly general uniformity in construction operation, being the natural result of economic competition.
Some of these operations have potential for environmental impact, and where these can be anticipated in the design stage, ‘special provisions’ shall be written into the construction package. They shall spell out what can or cannot be done during specific operations. Unforeseen problems that arise during construction shall be addressed on the site, and the proponent’s best judgment used to ensure that changes to the contract do not cause negative environmental impacts.

Staff responsible for inspecting the contractor’s work must be made aware of such provisions, in order to ensure compliance during construction. It shall be the responsibility of

the proponent to ensure that inspectors enforce compliance with the environmental provisions, as well as the traditional engineering provisions, of the construction package.

C.3.3.3 Policy and Guidelines

Section A.2.10 provides information on other federal, provincial and municipal legislation that may apply to projects proceeding pursuant to the MCEA. Proponents should review this information and consider it as part of the MCEA process to support compliance with other environmental legislation. Completion of the MCEA process does not relieve the proponent from complying with all applicable legislation, regulations, policies etc. or guarantee the issuance of other permits, approvals authorizations etc. for the project.

Part D – Municipal Transit Projects

D.1 Introduction and Background

Public transit is a key component of municipal transportation networks. As municipalities continue to grow, there is an increasing emphasis being placed on public transit due to its overall societal benefits on a broad scale. This is clearly evident in the identification of significant increases in transit as an integral part of many of the municipal Transportation Master Plans that have been or are being completed.

With the growing emphasis on public transit at the federal, provincial and municipal levels, municipal proposals for a wide range of transit initiatives are escalating. It is recognized that public transit offers many benefits as compared to the private automobile including:

- it is a more effective and efficient way of moving people;
- it is more energy efficient per person;
- it requires less energy and produces less emissions per person;
- it provides mobility to all persons in society; and
- it will help achieve sustainable development and an improved urban environment.

In 2007, the Municipal Transit Projects Chapter was added to the MCEA. This provided municipalities with a streamlined process for planning and implementing transit projects under the EAA.

In 2008, Ontario Regulation 231/08, Transit Projects and Metrolinx Undertakings made under the EAA came into effect, providing an alternative streamlined assessment process for transit projects to that in this class environmental assessment. In accordance with subsection 2(6) of the Transit Regulation proponents must provide written notice to the Director of the Environmental Assessment Branch and the appropriate Regional Director of the ministry if they intend to proceed with the process set out in the MCEA where the transit assessment process otherwise applies. The notice must clearly state that the proponent intends to proceed with their undertaking pursuant to the MCEA process.

Proponents should note that transit projects that include heavy rail cannot proceed pursuant to the MCEA but rather must proceed pursuant to the transit project assessment process set out in the Transit Regulation.

Proponents should also note that, while efforts have been made to update the MCEA to align with the Transit Regulation in terms of the classification of projects in the MCEA, there may be differences in terms of the exemption of projects between the MCEA and the Transit Regulation. Proponents must have regard to the specific provisions of the process they are following.

D.1.1 Transit Regulation

The Transit Regulation exempts proponents of transit projects from the requirements under Part II and Part II.1 of the EAA, but then requires that certain transit projects (those set out in Schedule 1 to the regulation – also set out below) follow a streamlined assessment process in order to be exempt. **If a transit project is not listed in Schedule 1 of the regulation, it is exempt from Parts II and II.1 of the EAA and may proceed subject to any other required approvals. If a proponent gives notice that it intends to follow the MCEA process and the project fits within a project description in the MCEA that is not classified as exempt, the project is not exempt from Parts II and II.1 of the EAA and the proponent must complete the required MCEA process.**

The Transit Regulation sets out the "transit project assessment process". This process is a streamlined assessment process that can be used for dedicated transit facilities or services. Mixed use facilities cannot be planned using the transit project assessment process.

The transit project assessment process is a proponent-led, self-assessment process. This process has prescribed timelines that pertain to both proponents and the Minister. In addition, where concerns (objections) regarding the undertaking are raised to the Minister, the Minister may only act if in the opinion of the Minister, the project may have a negative impact on a matter of provincial importance that relates to the natural environment or cultural heritage value/interest or a constitutionally protected Aboriginal or treaty right.

Proponents of dedicated municipal transit facilities or services, other than heavy rail, have the option to provide written notice to the Director of the Environmental Assessment Branch and the appropriate regional director of the ministry indicating their intent to proceed with their transit project pursuant to the MCEA.

For those transit projects that will involve mixed uses (i.e. cars and public transit) or will involve other infrastructure projects that are not part of the dedicated transit project, proponents are required to proceed with their undertaking pursuant to the MCEA.

For additional information on the transit project assessment process, please refer to the Transit Regulation and the Ministry of Environment, Conservation and Parks' Guide: Ontario's Transit Project Assessment Process, January 2014.

Schedule 1 – Classes of Transit Projects Exempted Conditional on Compliance with Transit Project Assessment Process

Subsection 1(1) of Schedule 1 in the Transit Regulation lists the classes of transit projects are exempt from Parts II and II.1 of the EAA if the transit project assessment process is commenced and followed. The classes of undertakings set out in subsection 1(1) of Schedule 1 is provided below for convenience.

Classes of undertakings:

1. Culvert repair or replacement where the capacity of the culvert or drainage area is changed;
2. Reconstruction of water crossing where the reconstructed facility will not be for the same purpose, use, capacity and at the same location as the facility being reconstructed (capacity refers to hydraulic capacity);
3. Construction of new stations in or adjacent to residential land-use or an environmentally-sensitive area including natural heritage features, cultural heritage and archaeological resources, recreational or other sensitive land-uses;
4. Construction of new passenger pick-up/drop off areas (e.g. Kiss and Ride), and park and ride lots in or adjacent to residential land-use or an environmentally-sensitive area including natural heritage features, cultural heritage and archaeological resources, recreational or other sensitive land-uses;
5. Construction of new grade separation;
6. Construction of new storage facilities in or adjacent to residential land-use or an environmentally-sensitive area including natural heritage features, cultural heritage and archaeological resources, recreational or other sensitive land-uses;
7. Reconstruction, widening or expansion of linear components of a transit system where the reconstructed facility will not be for the same purpose, use, and at the same location as the facility being reconstructed (e.g. a change from an existing Reserved Bus Lane (RBL) that is separated from general purpose lanes by signage and pavement markings only to a Reserved Bus Lane (RBL) in a right-of-way that is physically separated from general purpose lanes).
8. Widening of an existing road to create new transit lanes for bus or light rail;
9. Construction of new maintenance facilities in or adjacent to residential land-use or an environmentally-sensitive area including natural heritage features, cultural heritage and archaeological resources, recreational or other sensitive land-uses.
10. Construction of new Transit System i.e. involving construction of new infrastructure.

D.1.2 Definition of "Municipal Transit"

Subsection 1(1) of Schedule 1 in the Transit Regulation refers to and relies on the definitions contained in this Class EA. For the purposes of the regulation and the t**ransit project assessment process**, "municipal transit", includes heavy rail (subway). However, as indicated previously, the process set out in the MCEA cannot be used for transit projects that include heavy rail.

D.1.3 Glossary of Transit Terms

This section defines terms specific to the transit section of the MCEA. Proponents should also refer to the Glossary of Terms for defined terms applicable to the entire document.

The following terms are specific to this chapter:
Ancillary Facilities – can include landscaping, other streetscape treatments and parking lots.

Heavy Rail Transit (HRT) – The American Public Transportation (APTA) Public Transportation Fact Book, 2006 defines **Heavy Rail** as:

> *An electric railway with the capacity for a high volume of traffic. It is characterized by high speed and rapid acceleration passenger rail cars operating singly or in multi-car trains on fixed rails; separate rights-of-way from which all other vehicular and foot traffic are excluded; sophisticated signaling and high platform loading. If the service were converted to full automation with no onboard personnel, the service would be considered an automated guideway.*

High Occupancy Vehicle (HOV) – a bus or motor vehicle containing the specified minimum number of persons prescribed by local by-laws.

Intelligent Transportation Systems (ITS) – The application of advanced and emerging technologies (computers, sensors, control, communications, and electronic devices) in transportation to save lives, time, money, energy and the environment.

Intermediate Capacity Transit System (ICTS) – The Canadian Urban Transit Association (CUTA) Canadian Transit Handbook describes ICTS in Section 3.3.4.

Linear Component of a Transit System - the travelled way including road lanes, lanes in an exclusive right-of-way, at grade track, or grade separated lanes/track of a transit facility and other ancillary features (e.g. ballast, electrical substations etc.), exclusive of stations, park and ride lots and storage and maintenance facilities.

Linear Paved Facilities – facilities which utilize a linear paved surface including road lanes, or lanes for High Occupancy Vehicle (HOV) lanes.

Maintenance Facility – A facility where the service and repair of major mechanical components of transit vehicles is undertaken and typically includes vehicle storage.

Municipal Transit – refers to public transportation services (and facilities) undertaken by a municipality for travel within a municipality or region, and can incorporate various technologies including bus, streetcar/light rail vehicle, Intermediate Capacity Transit Systems (ICTS) and heavy rail (subway).

Park and Ride Lot – Parking Lot associated with a transit stop, station or terminal for the purposes of passenger transfer between personal automobile and transit services. Same Purpose, Use and Location – see Section D 1.3.1 below

Storage Facility/Yard – A facility used for the storage of transit vehicles, and can include vehicle fueling, washing facilities and minor “running maintenance”.

Transit Loop – A facility constructed for the primary purpose of allowing a transit vehicle to turn around, either at the end of, or midway along, its route. Transit loops may include modest pedestrian facilities such as a passenger shelter and, in some cases, washrooms for operators.

Transit Project – has the same meaning as in O. Reg. 231/08 and is defined as:

a) an enterprise or activity that is the planning, designing, establishing, constructing, operating, changing or retiring of;
   i. a facility or service that, aside from any incidental use for walking, bicycling or other means of transporting people by human power, is used exclusively for the transportation of passengers by bus or rail; or
   ii. anything that is ancillary to a facility or service described in subclause (i) and that is used to support or facilitate the transportation of passengers by bus or rail, or
b) a proposal, plan or program in respect of an enterprise or activity described in clause (a).

Transit Station/Terminal – A facility which is typically designed to accommodate passenger transfer activity between transit modes and other travel modes and may include passenger pick-up and drop-off and park and ride lots. Transit stations may include water crossings or a overpasses/underpasses for pedestrian use, passenger services buildings, shelters or structures, benches, fare collection equipment, passenger information facilities, bicycle posts/lockers and/or other related passenger equipment, amenities and facilities. The implementation of transit stations typically requires property acquisition. A transit station may also include the construction of a new subway station on an existing subway line, with or without any significant transfer facility at grade.

Transit Stop –A facility where transit vehicles stop to pick up and discharge passengers and may include boarding/alighting platforms, bus bays, passenger shelters, benches, fare collection equipment, passenger information facilities and other related passenger equipment, amenities, and facilities. Examples of transit stops include:

- A bus, streetcar, or light rail vehicle stop or group of stops located on any roadway;
- A stop or group of stops on any existing transit facility such as a separate busway or rail facility, or a median bus rapid transit or rail facility with no or minimal intermodal transfer provisions (e.g. provisions to transfer between interregional and local bus services).

Transit System – Encompasses the linear component of a transit facility and associated system elements such as stations, park and ride lots, storage and maintenance facilities and other ancillary features.

D.1.3.1 "Same Purpose, Use and Location"

The Glossary defines the same purpose, use, capacity and location for municipal roads and water/wastewater projects. This definition has been modified for municipal transit projects.

Same Purpose, Use, and Location (for transit projects/activities) refers to the replacement or upgrading of a structure or facility, where the objective and application

remain unchanged, and there is no substantial change in location. For the purposes of the Transit Project table:

Purpose and Use refer to the overall intended result/objective of the project, and the specific operational utilization of the corridor.

Location refers to the specific site of physical changes. For example, for a transit facility within a roadway, works carried out within an existing road allowance such that no land acquisition is required are considered to be in the same location. *(*Note: *road allowance* is defined in the Glossary). It is recognized that some projects may involve no change in purpose or use and be within the existing road allowance other than minor additional property requirements in localized, site-specific areas. If the impacts are determined not to be significant, this can be considered to be in the same location.

Note that this definition does not apply to operational changes on a roadway that do not involve physical construction. For example, the dedication of an existing traffic lane for the exclusive use of transit through signing and/or pavement markings would not constitute a change in purpose and use, within the context of this document and the transit project schedules, if not accompanied by the construction of a physical barrier.

Example a) A general traffic lane is reconstructed as a physically-separated (e.g. semi-exclusive) transit lane. This is considered to be a significant change in the purpose and use of the lane.

Example b) A median transit lane separated from general traffic by a physical barrier is reconstructed with no change in footprint and with no change to the extent of physical separation from other traffic. This is considered to be for the same purpose and use.

D.1.4 Transit in the MCEA

This section provides a broad description of the following with respect to municipal transit projects:

- the projects, purpose and alternatives.
- the environment and potential mitigating measures; and

Part D of this Class EA should be reviewed in conjunction with the project tables in Appendix 1; the typical mitigation measures for potential effects in Appendix 2; and the agency consultation recommendations based on environmental factors in Appendix 3.

The MCEA process, including consultation and documentation, is provided in Part A of this Class EA.

D.1.5 Key Considerations

Transit projects are discussed in Section D.2. This section addresses key considerations when developing and assessing alternatives to a transit project and alternative designs for a transit project.

When generating and evaluating alternative transit improvement solutions in Phases 2 and 3 of the MCEA process, the proponent shall bear the following considerations in mind:

1. Land-Use Planning Objectives

Land-use planning objectives refer to the plans and policies identified in provincial plans and municipal Official Plans and Secondary Plans. At a provincial level, key policies/plans include the Provincial Policy Statement, 2020 (PPS), the *Places to Grow Act*, 2005 and associated Growth Plans.

The *Planning Act* requires that municipal Official Plans contain "goals, objectives, and policies established primarily to manage and direct physical change and the effects on the social, economic, and natural environment". The *Planning Act* prescribes a rigorous process by which Official Plans are to be developed and periodically reviewed, including opportunities for extensive public consultation. Once in place, Official Plans are legal documents, and therefore, provide the specific municipal policies and objectives that need to be considered including, but not limited to, those for: urban areas, growth areas/corridors, rural areas, neighbourhoods and residential areas, employment areas, transit and transit-supportive development, commercial, institutional, recreational, natural, open space, agricultural, and special policy areas.

2. Natural Heritage Features

The natural environment includes the following typical elements:

- landforms (including valleylands)
- groundwater
- surface water and fisheries
- terrestrial vegetation and wetlands
- wildlife and habitat and
- connections provided by, or between these, resources

Within this natural environment framework, significant natural heritage features may be identified at the local, regional, provincial or federal level reflecting municipal, Conservation Authority, provincial or federal designations/policies. Key elements such as valleylands, fish habitat, evaluated wetlands (including Provincially Significant Wetlands), significant portions of the habitat of threatened and endangered species, Areas of Natural and Scientific Interest (ANSI), and Environmentally Sensitive Areas (ESAs) will constitute significant natural heritage features. Woodlands and wildlife habitat may also constitute significant features if certain criteria are met. Natural heritage features should be identified early in the EA process to determine significant features and potential impacts. Significant natural heritage features should be avoided where possible. Where they cannot be avoided, then effects should be minimized where

possible, and every effort made to mitigate adverse impacts.

In most cases, municipalities have specific policies related to the protection of the natural environment. These policies, along with regional, provincial, and/or federal policies should be identified as part of the MCEA process.

3. Social Environment
The social environment includes existing communities, residential areas and recreational areas. Significant negative impacts to the social environment should be avoided where possible. Where they cannot be avoided, then effects should be minimized where possible, and every effort made to mitigate adverse impacts. Key considerations are the overall community impacts to residential property and access, community facilities and access, recreational facilities and access, pedestrians, cyclists, noise impacts and air quality.

In most cases, municipalities have specific policies related to the protection of the social environment. These policies, along with regional and/or provincial policies, should be identified as part of the MCEA process.

4. Cultural Environment
"Cultural environment" refers to archaeological resources, built heritage resources and cultural heritage in the environment. Areas of archaeological potential must be identified in accordance with the *Ontario Heritage Act*. Relevant terms can be found in the glossary.

Significant cultural heritage resources must be conserved. Where significant cultural heritage resources cannot be avoided, adverse impacts are to be mitigated in accordance with provincial and municipal policies, procedures, best practices and guidelines.

5. Indigenous Communities
Proponents proceeding pursuant to the MCEA are required to consult with interested persons and with Indigenous Communities who may be affected by a proposed undertaking. Municipalities are directed to contact the ministry for direction on consultation with Indigenous Communities. For more information, see Part A.3.7.

As part of the assessment process, proponents should consider the potential for the project to impact:

- Reserve lands and/or Indigenous Traditional Land Use Areas
- Aboriginal or treaty rights and claims
- Use of land and resources for traditional purposes
- Aboriginal Peoples' industry and economic opportunities
- Archaeological sites

6. Economic Environment
Economic Environment includes commercial and industrial land uses and activities. It

also includes the financial costs associated with the alternatives, including construction, operation, maintenance, and property costs.

7. Property
Significant impacts to property should be avoided where possible. Where they cannot be avoided, the effects should be minimized where possible, and every effort made to mitigate adverse effects.

Property impacts include direct impacts on access, parking, and buildings, and indirect impacts such as where relocating property lines would result in the property owner being out of compliance with local standards (e.g. building setback requirements, etc.).

8. Evaluation of Alternative Solutions
When evaluating alternative solutions, the following considerations should be kept in mind:

- Many of the potential alternative solutions may resolve more than one problem.
- The feasibility of the alternative solutions will depend, in part, on the nature and location of the infrastructure, the nature and location of the opportunity and/or problem(s) being addressed, the comparative cost of the alternative solutions, and on the municipality's capacity to finance the extension of services.

At a broad planning level, this step is typically addressed in Transportation Master Plans (see Section D.1.6), recognizing that the determination of transit needs would be a component of developing a balanced and integrated multi-modal transportation solution.

D.1.6 Overview of Transit in Transportation Master Plans

Many municipalities undertake Transportation Master Plans (TMPs) to define their long-term transportation objectives as a supplement to transportation needs identified through their Official Plan development process. A Transportation Master Plan integrates existing and future land-use planning and the planning of transportation infrastructure with the principles of environmental assessment planning.

In larger urban areas, Transportation Master Plans often recognize that the current level of reliance on the automobile is not sustainable and that public transit provides benefits to the natural, social, and economic environment by improving mobility for people through providing traffic relief for people and goods, and reducing environmental impacts. As such, many Transportation Master Plans at the regional and local levels emphasize that increased use of transit is a key component of an integrated transportation strategy that considers all modes of travel.

Transportation Master Plans usually build upon the analysis and detailed policies developed through municipal Official Plans. Therefore, it must be recognized that the link between Transportation Master Plans and Official Plans is fundamental. An Official Plan is a legal document, developed through a public and legislative process in accordance with the *Planning Act* that contains "goals, objectives and policies

established primarily to manage and direct physical change and the effects on the social, economic and natural environment of the municipality". While Official Plans are approved under the *Planning Act,* typically they are developed through a process which applies the principles of EA planning. As such, Official Plans provide a planning and technical basis for undertaking infrastructure environmental assessment studies.

Development of a Transportation Master Plan pursuant to the MCEA would include a stakeholder consultation process that involves consultation with the public, government technical agencies, other municipalities and Indigenous Communities.

If developed in accordance with section A.2.7 of the MCEA, at a minimum, a Transportation Master Plan must follow the same steps as Phases 1 and 2 of the MCEA process. As a result, a Transportation Master Plan can provide the basis for addressing EA requirements for studies of the specific projects, including the problem and/or opportunity being addressed and the range of alternatives being considered. Transportation Master Plans are discussed in Section A.2.7.

D.1.7 Integration with the *Planning Act*

The MCEA also provides for the opportunity to integrate the requirements of this Class EA with requirements under the *Planning Act* as discussed in Section A.2.9 of this Class EA. The key is that the requirements of both Acts must be met.

D.2 Description of the Projects, Purpose and Alternatives

D.2.1 New Transit System

D.2.1.1 – Description of the Projects

Transit Systems are comprised of the linear components of a transit system and elements such as stations, park and ride lots, storage and maintenance facilities and other ancillary features. These projects typically involve the acquisition of a new or widened right-of-way.

D.2.1.2 Purpose of the Project

New transit systems planned under this Class EA could be undertaken to provide new or extended transit facilities for the following possible reasons:

1) to accommodate and support opportunities and policies for economic development and municipal growth;
2) to support opportunities and policies for reducing auto-dependency and increasing use of alternate modes of transportation, including transit;
3) to address projected capacity deficiencies in the transportation system;
4) to provide greater transportation choice for basic mobility for those persons who do not have an alternative, including transit-dependent students, lower income workers, seniors and persons who cannot or do not drive;

5) to support policies for reducing environmental and health impacts of transportation; and
6) to provide access to existing or proposed land uses.

D.2.1.3 Alternative Solutions

In many instances, there may be more than one way of solving problems, addressing opportunities or meeting the demand for new or extended transit facilities. Possible "Alternative Solutions" may include:

1) New transit system;
2) Widen or improve existing roads for general traffic, High Occupancy Vehicles (HOVs) or transit vehicles;
3) Transit operational changes (i.e. increased frequency of service or extended routes on existing roads);
4) Provide alternative transportation facilities such as a new road, train, ferry, etc.;
5) Limit/manage growth;
6) Develop alternative routes for existing or anticipated traffic; and
7) "Do Nothing".

It should be noted that a combination of alternatives may be required to address the problem and/or opportunity (e.g. widen roadway for exclusive bus use in peak periods and general traffic use in off-peak periods).

D.2.2 Linear Facilities and Associated Elements

D.2.2.1 Description of the Projects Under the Class EA

Projects of this type would typically involve one or more of the following:

- construction of a new transit system with new transit facilities;
- culvert repair or replacement where the capacity of the culvert or drainage area is changed;
- construction of a new grade separations;
- reconstruction of a water crossing;
- reconstruction, widening or expansion of linear components of a transit system;
- widening of an existing road to create new transit lanes for bus or light rail; and
- other municipal infrastructure combined with transit.

D.2.2.2 Purpose of the Project

Linear facilities and associated elements will be undertaken for the following possible reasons:

1) to accommodate and support opportunities and policies for economic development and municipal growth;
2) to support opportunities and policies for reducing auto dependency and increasing use of alternate modes of transportation, including transit;
3) to address projected capacity deficiencies in transportation system;

4) to provide greater transportation choice and basic mobility for those persons who do not have an alternative, including transit-dependent students, lower income workers, seniors and persons who do not drive;
5) to address deficiencies in current transportation infrastructure, including structural and capacity deficiencies;
6) to support policies for reducing environmental and health impacts of transportation;
7) to provide access to existing or proposed land uses.

D.2.2.3 Alternative Solutions

In many instances, there may be more than one way of solving problems, addressing opportunities or meeting the demands on existing linear facilities. Possible "Alternative Solutions" may include, for example:

1) widen or improve existing facilities for general traffic, High Occupancy Vehicles (HOVs) or transit vehicles;
2) transit operational changes (i.e. increased frequency of service or extended routes on existing roads);
3) provide alternative transportation facilities such as train, ferry, etc.;
4) limit/manage growth;
5) develop alternative routes for existing or anticipated transit; and
6) "Do Nothing". It should be noted that a combination of alternatives may be required to address the problem and/or opportunity (e.g. widen roadway for exclusive bus use in peak periods).

D.2.3 Site Specific Facilities

While "site-specific" facilities are often part of linear transit systems, they may also be "standalone" facilities. Transit systems include both linear components and site specific facilities.

D.2.3.1 Description of the Projects

The projects developed in this group include those that are located in or adjacent to residential land use or an environmentally-sensitive area including natural heritage features, cultural heritage and archaeological resources, recreational or other sensitive land-uses or projects that are located in or adjacent to sensitive uses as defined in Schedule 1 of the regulation and included in Appendix 1 of the MCEA.

- construction of new stations
- construction of new passenger pick-up/drop off areas (e.g. Kiss and Ride), and park and ride lots
- construction of new storage facilities
- construction of new maintenance facilities.

D.2.3.2 Purpose of the Projects

Projects to develop site specific facilities are undertaken to address one or more of the following problems:

- additional or expanded stations required to meet demand or service requirements
- increased transit vehicle fleet to be maintained
- inadequate parking facilities
- inadequate vehicle storage facilities

D.2.3.3 Alternative Solutions

The above problems, opportunities or a combination of them could justify the development of a site-specific project. Examples of alternative solutions that may be considered are:

- build a new facility
- increase the capabilities of a nearby facility
- increase the efficiency of operation of existing facilities
- utilize mobile or temporary facilities
- lease commercially available facilities (e.g. parking lots)
- contract out the service function to a commercial enterprise (e.g. vehicle maintenance operations)
- “do nothing”
- a combination of multiple alternative solutions.

D.2.4 The “Do Nothing” Alternative

The “Do Nothing" alternative is to be considered for all projects proceeding pursuant to the MCEA. In the “Do Nothing” alternative, no facilities would be constructed to solve the identified problem or opportunity. This means that the problem would remain in the system or an opportunity would not be addressed. It does not necessarily mean, however, that no further development in the community would occur.

The “Do Nothing” alternative must be documented along with any other alternatives to the project which were examined.

The “Do Nothing” alternative may be recommended at any time during the design process prior to the commencement of construction. A decision to “Do Nothing” would typically be made when the costs of all other alternatives, both financial and environmental significantly outweigh the benefits.

D.3 Environment

D.3.1 Description of the Environment

The following provides an overview of environmental factors to be considered when reviewing existing and future conditions, developing alternatives, and analyzing and evaluating them to determine the preferred alternative.

Although these descriptions are general, the proponent is required to describe the environment to be affected by a specific project in detail including the significant

features which comprise each type of environment. It should be noted that potential environmental effects include both positive and negative effects. Review agencies, Indigenous Communities and the public will therefore have an opportunity to understand the specific environment affected by a given project while it is being planned. The list provided is general only and is intended to be developed on a project-specific basis reflecting the scope of the study area, federal, provincial, and municipal legislation, policies, and agency and public input.

Transportation:

- Existing transportation network
- Future transportation network

Land-Use Planning Objectives:

- Provincial
- Regional
- Municipal

Natural Environment/Natural Heritage Features:

- Natural heritage policies
- Fisheries and aquatic resources
- Vegetation and flora
- Wildlife resources and linkages
- Surface water
- Ground water
- Geotechnical
- Fluvial geomorphology

Social Environment:

- Existing communities
- Existing residential areas
- Recreational facilities
- Noise and vibration
- Air quality
- Aesthetics

Cultural Environment (Cultural Heritage and Archaeological Resources in the Environment):

- Archaeological resources and areas of archaeological potential; and
- Built heritage resources and cultural heritage landscapes

Indigenous Peoples:

- Reserve lands and traditional land use areas
- Aboriginal and treaty rights
- Archaeological sites
- Land claims

Economic Environment:

- Commercial land-use
- Industrial land-use
- Agricultural land-use
- Capital costs
- Property costs
- Maintenance costs

Other:

- Utilities

D.3.2 Description of the Potential Effects on the Environment

The effects (both positive and negative) on the environment are to be identified and assessed based on the following process:

- Review of existing conditions within the study area;
- Review of future conditions within the study area;
- Assessment of the potential effects that alternatives may have on the factors identified in Section D.3.1;
- Identification of a technically preferred alternative based on the overall net effects; and
- Review with affected parties per the requirements of the MCEA.

D.3.3 Mitigating Measures

D.3.3.1 Design

It is recognized that, overall, municipal transit offers many benefits to the social, natural, and economic environments in addition to transportation and land-use benefits. The Ontario Provincial Policy Statement, 2020 outlines the major benefits of transit to the economy, urban form, and protection of natural resources.

Through the planning and design process described in the MCEA, however, it may be determined that, together with the benefits, certain projects may have some adverse effects on the environment. The MCEA process is intended to identify potential impacts so that, where possible, they can be avoided. In some cases, this may not be possible. In such situations, measures will have to be taken to either minimize or offset such effects. Actions taken to reduce the effects of a certain project on the environment are called “Mitigating Measures”.

During design, the environment affected by a project will be established and the specific net effects identified. The design shall include measures to mitigate the negative effects. Measures which must be taken to minimize the negative effects will be worked out such that the design can be tailored to recognize them. Contract drawings and documents shall include special provisions to ensure the least impact on the environment. Appendix

2 sets out a table showing typical mitigating measures for potential adverse effects on the environment.

D.3.3.2 Construction

The MCEA describes the process by which the various alternatives are analyzed and the most suitable design is chosen. The construction stage presents another set of alternatives as to how the work will be undertaken.

Many projects which undergo the MCEA planning process will be carried out by contract let by competitive tender, and the contractor is normally the low bidder. The contractor will have estimated his costs and planned his method of operation during the tendering stage, subject to the specifications and special provisions in the contract and any relevant legislation.

Contractors differ in their approach regarding sequence of operation, techniques, methods of operation, type, make and size of equipment utilized, and speed of operation. There is, however, a fairly general uniformity in construction operation, being the natural result of economic competition.

Some of these operations have potential for environmental impact, and where these can be anticipated in the design stage, 'special provisions' shall be written into the construction package. They shall spell out what can or cannot be done during specific operations. Unforeseen problems that arise during construction shall be addressed on the site, and the proponent's best judgment used to ensure that changes to the contract do not cause negative environmental impacts.

Staff responsible for inspecting the contractor's work must be made aware of such provisions, in order to ensure compliance during construction. It shall be the responsibility of the proponent to ensure that inspectors enforce compliance with the environmental provisions, as well as the traditional engineering provisions, of the construction package.

D.3.3.3 Policy and Guidelines

Section A.2.10 provides information on other federal, provincial and municipal legislation that may apply to projects proceeding pursuant to the MCEA. Proponents should review this information and consider it as part of the MCEA process to support compliance with other environmental legislation. Completion of the MCEA process does not relieve the proponent from complying with all applicable legislation, regulations, policies etc. or guarantee the issuance of other permits, approvals authorizations etc. for the project.

Appendices

Appendix 1: Project Tables

1.1 General

The class of undertakings approved to proceed pursuant to the MCEA are set out in the tables in Appendix 1 together with their classification. The projects are broken into three tables based on the type of infrastructure: roads, water and wastewater and transit. Projects are classified into one of four schedules:

a) exempt from Environmental Assessment Act (EAA) requirements,
b) is eligible for exemption based on the results of the screening process(es) in Appendix 1;
c) should proceed through Schedule B or C despite being eligible for screening;
d) Schedule B, and
e) Schedule C.

Project Schedules are detailed in Section A.1.2.2.

<u>Exempt from Environmental Assessment Act requirements</u>
Most of the projects identified as exempt in the tables are exempt from the requirements of the EAA by section 15.3(4) of the EAA. As a result of the 2023 amendments a few additional projects have been exempted through section 15.3(1) of the EAA.

A proponent of an exempt project may decide to undertake consultation and assessment activities outside of the Class EA process.

Tables A, B, and C identify the schedule for each of the municipal undertakings (roads, water and wastewater and transit) that may proceed pursuant to the MCEA. The schedule of the undertakings determines the MCEA process that must be followed to proceed with an undertaking pursuant to the MCEA rather than completing an individual EA for a project. As part of the 2023 amendments, undertakings in the tables have been reorganized under new subheadings to assist users in finding the applicable project description and schedule.

<u>Eligible for Screening</u>
Those projects that are identified as eligible for screening may be exempt from the requirements of the EAA based on the results of the archaeological screening process, and the collector roads screening process. Proponents must fully and accurately complete the archaeological or collector road screening processes in order to determine whether their project can proceed without further application of the Act or if they must complete the identified Schedule B or C process. Completing the screening processes is voluntary and proponents may choose to proceed with the Schedule B or C process instead.

See more information on these screening processes below.

Voluntary Elevation of Schedule B and C Projects

A proponent may choose to voluntarily elevate a project classified as Schedule B by completing the Schedule C process or a project classified as Schedule C by completing an individual EA. Projects that are classified as exempt cannot be elevated to a Schedule B or C process.

Proponents may want to elevate a project where a project may have a greater environmental impact. In selecting the appropriate project schedule, it must be recognized that the level of complexity will vary depending on the nature of the project. Given the varying levels of complexity, the divisions among Schedules B and C projects are therefore often not distinct. The Class EA document defines the minimum requirements for the MCEA process or the planning of the project; the proponent is responsible for "customizing" it to reflect the complexities and needs of a specific project. Proponents should refer to Section A.2.1.1 for guidance in selecting the appropriate schedule and customizing the process to fit the project and the community. The classification of the project should be considered not only at the outset of project planning but throughout the process.

Key considerations are outlined in Parts B through D, and in Appendix 3 and include requiring property, affecting watercourses, affecting fisheries, affecting significant natural heritage features (e.g. woodlots and wetlands), or having impacts which are considered significant to your community.

Finding the Correct Schedule

Proponents must consider all aspects of their projects when reviewing the project tables to ensure the correct schedule is followed. In cases where components of a single project fall within more than one project description, the more rigorous schedule applies to the entire project. This does not include elements of a project that are classified as exempt (first column), though it does include projects that are classified as eligible for screening (second column).

Proponents must review all of the relevant project descriptions in the various tables (roads, water and wastewater and transit) for their project as some projects will involve work on more than one type of infrastructure.

For example, a project that includes a new road crossing and a new dyke will fit within project descriptions in both the roads and water and wastewater tables. The classification for both parts of the project must be determined and the highest schedule followed. The proponent must plan the project in accordance with all applicable requirements and may document the planning process in one Project File Report or Environmental Study Report.

Planning the Project in its Entirety

Proponents are required to plan large or extended projects in their entirety and the project schedule should be determined accordingly. Projects which are to be implemented in stages over an extended period of time must be planned in their entirety

at the time when the first stage is to be undertaken and must not be broken up, or piecemealed, into smaller components.

1.2 Archaeological Screening Process

The projects that are identified as eligible for screening, subject to the archaeological screening process (identified as "ASP") may be exempt from the requirements of the EAA as determined by the archaeological screening process set out below. In order to proceed with a project that is identified as eligible for screening, a proponent must either (i) carry out the process for a Schedule B/C project; or (ii) complete the archaeological screening process and follow the directions set out in the screening process. If the outcome of the screening process is that the project is exempt from the requirements of the EAA, the proponent may proceed with the undertaking/project without further application of the EAA to the project.

The archaeological screening process consists of three questions with links to various tools and criteria under the *Ontario Heritage Act*. Proponents must carry out the specified research and consultation to accurately respond to each question. This includes, but is not limited to, consultation with Indigenous Communities, municipal governments, and the Ministry of Citizenship and Multiculturalism, and may require the assistance of a licensed archaeologist. Proponents will not be able to accurately and properly answer the questions in the screening without the knowledge and assistance of other parties.

The ministry recognizes that some municipal proponents have an established relationship with Indigenous Communities and may have regular meetings to share information about upcoming projects and initiatives. It is appropriate for municipalities to use these meetings to discuss information on archaeological resources to respond to the checklists required by question 1 of the archaeological screening process. A consultation record must be maintained as part of the documentation for the undertaking/project.

If a proponent does not fully and properly complete the archaeological screening process in accordance with the questions set out below and the checklists/instructions referred to in those questions or mischaracterizes their project or the impacts associated with the project, the proponent cannot proceed with their project and would be out of compliance with the EAA. A project is not exempt unless the archaeological screening process is completed as required, project documentation maintained and all mitigation measures that are identified through the screening process are implemented. Despite whether a project screens as exempt through the archaeological screening process the project is not exempt from any subsequent permits and approvals. All other applicable permits and approvals continue to be required for the project.

1. Does the project area include known or potential archaeological resources?

- Proponents must complete the Criteria for Evaluating Archaeological Potential Checklist (form 021-0478E) and/or the Criteria for Evaluating Marine

Archaeological Potential Checklist (form 021-0503E) if your project is located in or by the water. The marine licensing program is different from the land-based system. The checklists can be accessed at: https://www.forms.ssb.gov.on.ca/mbs/ssb/forms/ssbforms.nsf/?OpenDatabase&ENV=WWE

- Instructions:
  - Fill out the Criteria for Evaluating Archaeological Potential Checklist beginning at question 2.
  - If your project is located in or by the water, fill out the Criteria for Evaluating Marine Archaeological Potential Checklist beginning at question 2.
  - To answer this question and complete the associated checklists, proponents need to contact:
    - The Ministry of Citizenship and Multiculturalism at archaeology@ontario.ca
    - Appropriate Indigenous Communities *
    - Local municipal staff
    - Research known burial sites or cemeteries

* You can contact the Ministry of the Environment, Conservation and Parks for guidance on which Indigenous Communities should be contacted.

- Responses:
  - If the checklist(s) identifies that there are known archaeological sites on or within 300 metres of the project area, or that the project area has potential for archaeological resources, then an archaeological assessment shall be undertaken by an archaeologist licensed under the *Ontario Heritage Act*. Please proceed to question two.
  - If the checklist identifies that the project area does not include known or potential archaeological resources, a project that is identified as exempt conditional on the completion of this screening is exempt from the EAA, provided that the notification/documentation process is followed, as set out below.

- Notification/Documentation:
  - The screening checklists must be filed as project documentation and made available upon request of the Ministry of the Environment, Conservation and Parks and/or any interested parties.
  - Proponents should also consider posting the screening checklists and/or relevant supporting documentation on the project/municipality's website.

2. Based on the archaeological assessment(s), will the proposed project/undertaking have negative impacts (effects) to archaeological resources?

- Instructions:
  - To respond to this question, archaeological assessment(s) must be undertaken by a licensed archaeologist. There are various stages of archaeological assessments, which your licensed archaeologist will be able to advise you on. For more information on archaeological assessment and their requirements, please refer to www.ontario.ca/archaeology.
  - Indigenous Communities should be engaged throughout the archaeological assessment process and any traditional knowledge that is shared should be considered and/or incorporated, as appropriate, into the assessment of potential impacts associated with the project.
    - Proponents should reference the following bulletin which is intended to help consultant archaeologists engage Indigenous Communities in archaeology as effectively as possible. http://www.mtc.gov.on.ca/en/publications/AbEngageBulletin.pdf

  - Archaeological concerns have not been addressed until a report(s) has been entered into the Ontario Public Register of Archaeological Reports where those reports recommend that:
    - the archaeological assessment of the project area is complete and
    - all archaeological sites identified by the assessment are either of no further cultural heritage value or interest (as per Section 48(3) of the *Ontario Heritage Act*) or that mitigation of impacts has been accomplished through excavation or an avoidance and protection strategy.
  - Proponents cannot proceed with any ground disturbing activities before receiving a letter from the Ministry of Citizenship and Multiculturalism indicating that the above criteria have been met.

- Responses:
  - Based on the archaeological assessment(s), if it has been determined that the proposed undertaking/project may have negative impacts to archaeological resources, proceed to question 3.
  - Based on the archaeological assessment(s), if it has been determined that the undertaking/project will not have negative impacts to archaeological resources, a project that is identified as exempt conditional on the completion of this screening is exempt from the EAA, provided that the notification/documentation requirements are met, as set out below.

- Notification/Documentation:
  - The archaeological assessment must be submitted to the Ministry of Citizenship and Multiculturalism. That ministry may review the report to ensure that the licensed archaeologist met the terms and conditions of

their licence, including requirements for fieldwork and reporting, and to ensure that concerns for any archaeological sites found were properly addressed.
    - A Notice of Project Screening must be provided to the ministry's regional email account, provided in section A.1.5, documenting that the proponent has followed the archaeological screening process.
    - The archaeological assessment(s) must be filed with other project documentation.
    - Proponents should also consider posting the Notice of Project Screening and relevant supporting documentation on the project/municipality's website.

3. Based on the archaeological assessment(s), will any negative impacts (effects) be appropriately mitigated?

- Instructions:
    - To respond to this question, archaeological assessment(s) must be undertaken by a licensed archaeologist. There are various stages of archaeological assessments, which your licensed archeologist will be able to advise you on. For more information on archaeological assessment and their requirements, please refer to www.ontario.ca/archaeology.
    - Indigenous Communities should be engaged throughout the archaeological assessment process and any traditional knowledge that is shared should be considered and/or incorporated, as appropriate, into the assessment of potential impacts associated with the project.
        - Proponents should reference the following bulletin which is intended to help consultant archaeologists engage Indigenous Communities in archaeology as effectively as possible. http://www.mtc.gov.on.ca/en/publications/AbEngageBulletin.pdf

    - Archaeological concerns have not been addressed until a report(s) has been entered into the Ontario Public Register of Archaeological Reports where those reports recommend that:
        - the archaeological assessment of the project area is complete and
        - all archaeological sites identified by the assessment are either of no further cultural heritage value or interest (as per Section 48(3) of the *Ontario Heritage Act*) or that mitigation of impacts has been accomplished through an avoidance and protection strategy.
        - Proponents cannot proceed with any ground disturbing activities before receiving a letter from the Ministry of Citizenship and Multiculturalism indicating that the above criteria have been met.

- Responses:
    - Based on the archaeological assessment(s), if it has been determined that the proposed ***project will have negative impacts on archaeological***

resources that cannot be appropriately mitigated, the project ***is not exempt*** from the EAA.
    - Based on the archaeological assessment(s), if it has been determined that ***the impacts to archaeological resources can be appropriately mitigated***, a project that is identified as exempt conditional on the completion of this screening ***is exempt*** from the EAA, provided that the notification/documentation requirements are met, as set out below, and the proponent implements all necessary mitigation measures that were identified in the archaeological assessments.

- Notification/Documentation:
    - The archaeological assessment must be submitted to the Ministry of Citizenship and Multiculturalism That ministry may review the report to ensure that the licensed archaeologist met the terms and conditions of their licence, including requirements for fieldwork and reporting, and to ensure that concerns for any archaeological sites found were properly addressed.
    - A Notice of Project Screening must be provided to the ministry's regional email account, provided in section A.1.5, documenting that the proponent has followed the archaeological screening process.
    - The archaeological assessment(s) must be filed with other project documentation.
    - Proponents should also consider posting the Notice of Project Screening and relevant supporting documentation on the project/municipality's website.

1.3 Collector Road Screening Process

In order to proceed with an undertaking identified as subject to the collector road screening process (CR) in the column titled Eligible for Screening in Table A: Municipal Roads Projects, a proponent must either (i) carry out the process for a Schedule B or C project, as applicable; or (ii) undertake the Archaeological Assessment Screening Process and Collector Road Screening Process and follow the directions provided for each of the screenings. If the outcome of the screening process is that the project is exempt from the requirements of the EAA, the proponent may proceed with the undertaking without further application of the EAA. If the outcome of the screening processes is that the undertaking is not exempt, the proponent must complete the Schedule B or Schedule C process, as applicable (refer to the columns under Class EA in the table).

Proponents are required to answer "yes" or "no" to the questions below. If the answer to any of the questions is "no", then the proponent must proceed with the applicable Schedule B or C process. If the answer to each of the questions is "yes" the project may be exempt subject to the results of the Archaeological Screening Process.

Proponents may rely on information and studies already prepared that include the project, such as work completed under the *Planning Act* (e.g. approved Master Plans

under MCEA [Approach 2] or Secondary Plans), to meet the requirements of the screening questions below. Where a time lapse has occurred between when a Master Plan was completed and when the project is proceeding, the conclusions and assumptions in the Master Plan should be revisited. The proposed project must have been sufficiently planned, described, and detailed under the *Planning Act* to rely on this information. A road illustrated with a line on a schedule to a Secondary Plan or an Official Plan is not sufficient for the purposes of this screening. The municipality must be satisfied that the proposed road will provide the required function in the road system. Alternative alignments and a specific location for the road must be identified as part of the *Planning Act* approvals (i.e. road allowance) and design (i.e. cross-section for a road) for the project such that the municipality, the public and other stakeholders could understand and raise any concerns with the proposed project through the *Planning Act* process. Municipalities are responsible for ensuring that there are sufficient controls in the *Planning Act* approval (i.e. specific clauses in the draft conditions and/or subdivision agreement) to ensure that the collector road will be properly designed, constructed and implemented and that they are constructed in accordance with the approval.

Proponents who have answered “yes” to all of the questions below are required to provide the local MECP Regional Environmental Planner with the project documentation, including a summary about the evaluation of the alternative solutions (and design concepts) and rationale of the preferred solution (and design concept), defined alignments, mitigation measures, and consultation process, to confirm that the project is exempt before proceeding. Proponents must also maintain consultation records. Proponents should contact the MECP Regional Environmental Planner for direction on which Indigenous Communities should be consulted with.

Proponents should provide the local MECP Regional Environmental Planner with project documentation before completing the archaeological screening process.

Screening Questions

1. Has the final collector road alignment been specifically defined in the *Planning Act* approval, **AND**

   a) The majority of the collector road is located on a new alignment in a plan of subdivision; **OR**,

   b) The collector road is located in an existing road allowance associated with a plan of subdivision (e.g. condition of approval);

   AND

   The collector road was identified in an approved Master Plan such as a Transportation Master Plan completed under the master planning process in the MCEA and the new alignment is identified on a Secondary Plan or an Official

Plan approved under the *Planning Act,* or other approved municipal transportation studies or master plans.

Note - Municipally approved Master Plans or transportation studies that were completed by a municipality but were not completed pursuant to the master planning process in the MCEA may still meet the criteria above. Proponents must demonstrate that the criteria above are met and provide these studies to the MECP to confirm.

2. Has the problem (deficiency) or opportunity been identified? **(Y/N)**

3. Were environmental studies completed based on the broad definition of the environment as defined in the EAA to describe the existing environment? **(Y/N)**

4. a) Were alternative solutions identified and assessed, including selecting a preferred solution, taking into consideration the existing environment and potential effects as part of the Master Plan completed under MCEA process? **(Y/N)**

   b) Were alternative designs identified, assessed and consulted on taking into consideration the existing environment and potential effects as part of the *Planning Act* approval in a manner that is similar to the MCEA process? **(Y/N)**

5. Were potential environmental effects assessed, and mitigation measures developed committed to be implemented, and documented as a part of the *Planning Act* approval at an increased level of detail for the preferred undertaking? **(Y/N)**

   Note - Proponents must implement any mitigation measures developed for the project and undertake any environmental monitoring (as may be applicable).

6. Did consultation with federal, provincial, and local governments and agencies, the public and Indigenous Communities occur at all key decision-making milestones (e.g. with respect to the alternatives considered and the preferred solution)? **(Y/N)**

   Note - The proponent must have consulted with interested persons at key decision-making milestones (e.g. consideration of alternatives, selected of a preferred alternative and preferred design concept). Federal agencies will be consulted as may be applicable.

7. Have all outstanding commitments and concerns raised been appropriately addressed/considered? **(Y/N)**

   Note – if an Indigenous Community raises concerns with respect to an Aboriginal or treaty right, the proponent must contact the ministry before proceeding further.

8. Have any other appliable permits, approvals or authorizations been identified and relevant government agencies consulted? **(Y/N)**

1.4 Notes for Tables A, B, And C

- “ASP” means the archaeological screening process described in section 1.2
- “CR” means the collector road screening process described in section 1.3

Table A: Municipal Road Projects

Table A uses cost thresholds to determine the schedule for a road project. A determination as to which schedule is appropriate will require the proponent to prepare a cost estimate for the project during Phase 2 when the appropriate schedule is still under consideration.

In the Table A, the following notations apply:

- NL – No financial limit
- < $12 m – less than $12 million
- ≥ $12 m – greater than or equal to $12 million

Note: Previously the MCEA allowed for cost thresholds to be indexed by MEA based on MTO’s Tender Price Index. The cost thresholds in the table have been adjusted to March 2022 based on MEA’s prior indexing in March 2019.

- The cost limit of $2.4 million has increased to $3 million.
- The cost limited of $3.5 million has increased to $4.1 million.
- The cost limit of $9.5 million has increased to $12 million.

Cost thresholds will be updated on an annual basis by the ministry based on MTO’s Tender Price Index, and will be effective when published on the Environmental Registry on Ontario (ERO).

Table B: Municipal Water and Wastewater Projects

The **dams** and **weirs** referred to in the table are flow control structures located within a watercourse. Any outfall structure at a wastewater treatment facility or sewage lagoon would be part of that wastewater treatment facility or sewage lagoon and would not be considered a dam or weir within one of these sections. Stormwater management facilities, whether located within a watercourse or not, would not be considered a dam or weir.

Table C: Municipal Transit Projects

In accordance with section 2(6) of O. Reg. 231/08 made under the EAA (Transit Regulation), proponents must provide written notice to the Director of the Environmental Assessment Branch and the appropriate Regional Director of the ministry if they intend to proceed with the process set out in this Class EA where the Transit Assessment Process otherwise applies. The notice must clearly state that the proponent intends to proceed with their undertaking pursuant to the MCEA process.

Transit projects that include heavy rail cannot proceed pursuant to the MCEA but rather must proceed pursuant to the Transit Assessment Process set out in the Transit Regulation.

The term “environmentally-sensitive area” includes natural heritage features, cultural heritage and archaeological resources, recreational and other sensitive land uses as per Schedule 1 of Transit Regulation. It is the responsibility of the proponent to undertake the appropriate investigations and consultation to determine the adjacent land use and to identify “environmentally-sensitive” area(s) by applying the applicable legislation, policies, and standards.

Table A: Municipal Road Projects

Project Description	Exempt	Eligible for Screening	Schedule B	Schedule C
OPERATIONAL AND MAINTENANCE ACTIVITIES				
1 Normal or emergency operation and maintenance of linear paved facilities, cycling lanes/facilities & multi-purpose paths, sidewalks, parking lots and related facilities located within or outside existing rights-of-way • *Related facilities include bridges*	**X**			
2 Shaping and cleaning existing roadside ditches	**X**			
3 Gravel replacement and reshaping on existing roads	**X**			
4 Plowing and sanding	**X**			
5 Snow and de-icing operations that comply with MECP's Guideline B-4 "Snow Disposal and De-icing Operations in Ontario	**X**			
6 Stockpiling sand, gravel and fill	**X**			
7 Stockpiling of de-icing material at existing service facility where stockpiling has previously taken place	**X**			
8 Culvert repair and replacement where the capacity of the culvert is not increased beyond the minimum municipal standard or the capacity required to adequately drain the area, whichever is greater, and where there is no change in drainage area	**X**			
9a Initial stockpiling of de-icing material within an engineered permanent storage structure where the storage structure has an impervious ground surface and de-icing material will be protected from precipitation and surface runoff and the storage structure is not located in or adjacent to an environmentally sensitive natural area, residential, or other sensitive land use. • *Refer to "environmentally sensitive natural area" in the Glossary*		**ASP**	**X**	

Project Description	Exempt	Eligible for Screening	Schedule B	Schedule C
9b Initial stockpiling of de-icing material, where the de-icing material will be stored in an outdoor or unprotected facility or the facility is located in or adjacent to an environmentally sensitive natural area, residential, or other sensitive land use • *Refer to "environmentally sensitive natural area" in the Glossary*			**X**	
ROAD RELATED FACILITIES				
10 Establishment of a roadside park or picnic area	**X**			
11a Expansions, improvements and modifications to existing patrol yard and maintenance facilities where land acquisition is required provided the project conforms to *Planning Act* requirements and with municipal and other requirements	**X**			
11b Establish new patrol yards or maintenance facilities provided the project conforms to *Planning Act* requirements and with municipal and other requirements	**X**			
12a Construction of new parking lots not associated with a building	**<$12M**			
12b Construction of new parking lots not associated with a building and are not located in or adjacent to an environmentally sensitive natural area, residential or other sensitive land use, or on lands with cultural heritage or archaeological potential. • *To determine whether there is "archaeological potential" refer to MCM's Criteria for Evaluating Archaeological Potential checklist posted on the MEA website.* • *Refer to "environmentally sensitive natural area" in the Glossary*		**≥$12M ASP**	**≥$12M**	
12c Construction of new parking lots not associated with a building and are located in or adjacent to an environmentally sensitive natural area, residential or other sensitive land use, or on lands with cultural heritage or archaeological potential • *To determine whether there is "archaeological potential" refer to MCM's Criteria for Evaluating Archaeological Potential checklist posted on the MEA website.* • *Refer to "environmentally sensitive natural area" in the Glossary*			**≥$12M**	

Project Description	Exempt	Eligible for Screening	Schedule B	Schedule C
OTHER PROJECTS				
13 Projects planned and approved under Ontario Regulation 586/06 (see Section A.2.10.4)	**X**			
14a Construction of local roads which are required as a condition of approval on a site plan, consent, plan of subdivision or plan of condominium which will come into effect under the *Planning Act* prior to the construction of the road • *"Local" refers to roadway function not municipal jurisdiction. See the definition of "Roads" in the Glossary*	**X**			
14b Construction of a new collector road, or reconstruction or widening of an existing collector road that will not be for the same purpose, use, capacity or at the same location, and is required as a condition of approval on a plan of subdivision and/or the subdivision agreement which will come into effect under the *Planning Act*		**ASP CR**	**<$3M**	**≥$3M**
15 Any road project classified as a Schedule B or C undertaking for where the proponents determined that the work must be undertaken to address an emergency and the Director of the EAB is notified, and the conservation authority where relevant. A situation created by intentional delay does not constitute an emergency • *Notice should be provided within 30 days at the latest*	**X**			
16 Restoration of a facility immediately after a natural disaster, provided the facility is for the same purpose, use, capacity and all at the same location	**X**			
RECONSTRUCTION OF ROADS WITH NO INCREASE TO TRAVEL LANES				
17a Urban: Resurfacing, with no change to horizontal alignment	**X**			
17b Urban: Patching and frost heave treatment	**X**			
17c Rural: Resurfacing, patching and frost heave treatment with no change to horizontal alignment	**X**			
18 Streetscaping (e.g. decorative lighting, sidewalk improvements, benches, landscaping not part of another project)	**X**			

Project Description	Exempt	Eligible for Screening	Schedule B	Schedule C
19a Construction of localized operational improvements at specific locations, and construction of intersections and roundabouts. • *Project must be within an existing right-of-way* • *For projects that require property acquisition, refer to project description 33 to determine project schedule*	X			
19b Installation of guide rails	X			
20 Construction of a new culvert or increase culvert size due to change in the drainage area	X			
21 Reconstruction where the reconstructed road or other linear paved facilities (e.g. HOV lanes) will be for the same purpose, use, capacity and at the same location (e.g. addition or reduction of cycling lanes/facilities, parking lanes, or continuous centre turn lanes – no change to the number of motor vehicle lanes)	X			
22 Redesignation of a Linear Paved Facility through signage or pavement marking modifications (i.e. not requiring physical construction beyond localized operational improvements described in activity No.19a above): including ○ addition or removal of parking or turning lane markings on an existing roadway ○ conversion of one-way or two-way streets ○ redesignation of existing General-Purpose Lane (GPL) or on- street parking to High Occupancy Vehicle (HOV) or cycling lanes/facilities or vice versa: ○ addition or removal of cycling lanes/facilities or continuous turn lanes	X			
23 Construction of noise barriers (i.e. structures such as walls and berms or a combination of the two, including retaining walls which are part of a noise wall)	X			
24a Retirement of existing roads and road related facilities. • *Related facilities include bridges* • *Proponents should consider cultural heritage value in accordance with MEA's Municipal Heritage Bridge Checklist developed with the Ministry of Citizenship and Multiculturalism (MCM) and posted on the MEA website. Completion of the checklist does not mean approval or permission from MCM to remove a bridge with potential heritage value*	X			

Project Description	Exempt	Eligible for Screening	Schedule B	Schedule C
24b Retirement of existing laneways	**X**			
25a Construction or removal of sidewalks or multi-purpose paths or cycling facilities within existing or protected rights-of-way	**X**			
25b Construction or removal of sidewalks, multi-purpose paths or cycling facilities including water crossings outside existing right-of-way and/or in a utility or rail corridor	**<$4.1M**		**≥$4.1M**	**≥$12M**
26 Utility removal, modification or relocation for safety or aesthetic purposes	**X**			
27 New fence installations not associated with another project	**X**			
28a Installation, construction, or reconstruction of traffic control devices (e.g. signing, signalization)	**<$12M**			
28b Installation, construction, or reconstruction of traffic control devices (e.g. signing, signalization)		**≥$12M ASP**	**≥$12M**	
29a Installation of safety projects (e.g. lighting including "high mast", grooving, glare screens, safety barriers, energy attenuators)	**<$3M**			
29b Installation of safety projects (e.g. lighting including "high mast", grooving, glare screens, safety barriers, energy attenuators)		**≥$3M ASP**	**≥$3M**	
RECONSTRUCTION OF BRIDGES WITH NO INCREASE TO TRAVEL LANES				
30 Reconstruction of a water crossing where the reconstructed facility will be for the same purpose, use, capacity and at the same location • *Capacity refers to either hydraulic or road capacity but does not include alterations to include or remove facilities for cycling, pedestrians or to support utilities* • *This includes ferry docks*	**X**			

Project Description	Exempt	Eligible for Screening	Schedule B	Schedule C
31a Reconstruction of, or alteration to a structure or the grading adjacent to it, when the structure is over 40 years old and has been found not to have cultural heritage value or interest • *To determine whether a bridge has "cultural heritage value", refer to the MEA's municipal heritage bridge checklist developed with the Ministry of Citizenship and Multiculturalism and posted on the MEA website*	**X**			
31b Reconstruction of, or alteration to a structure or the grading adjacent to it when the structure is over 40 years old, the structure is found to have cultural heritage value or interest, and the heritage attributes will be conserved in accordance with the recommendations of a Heritage Impact Assessment • *To determine whether a bridge has "cultural heritage value", refer to the MEA's municipal heritage bridge checklist developed with the Ministry of Citizenship and Multiculturalism and posted on the MEA website*		**ASP**	**X**	
31c Reconstruction of, or alteration to a structure or the grading adjacent to it, when the structure is over 40 years old the structure is found to have cultural heritage value or interest, but heritage attributes will not be conserved in accordance with the recommendations of a Heritage Impact Assessment • *To determine whether a bridge has "cultural heritage value", refer to the MEA's municipal heritage bridge checklist developed with the Ministry of Citizenship and Multiculturalism and posted on the MEA website*			**X**	
NON-VEHICLE BRIDGES				
32a Construction of underpasses or overpasses for pedestrian, cycling, recreational or agricultural use	**<$3M**			

Project Description	Exempt	Eligible for Screening	Schedule B	Schedule C
32b Construction of underpasses or overpasses for pedestrian, cycling, recreational or agricultural use, and where the underpass or overpass would not be located in or adjacent to an environmentally sensitive natural area, potential built heritage resource or cultural heritage landscape or other sensitive land use, or on lands with archaeological potential • *To determine whether there is "archaeological potential" refer to MCM's Criteria for Evaluating Archaeological Potential checklist* • *Refer to new definition of "environmentally sensitive natural area" in the Glossary*		**≥$3M ASP**	**≥$3M**	
32c Construction of underpasses or overpasses for pedestrian, cycling, recreational or agricultural use, and where the underpass or overpass would be located in or adjacent to an environmentally sensitive natural area, potential built heritage resource or cultural heritage landscape or other sensitive land use, or on lands with archaeological potential • *To determine whether there is "archaeological potential" refer to MCM's Criteria for Evaluating Archaeological Potential checklist* • *Refer to new definition for "environmentally sensitive natural area" in the Glossary*			**≥$3M**	
RECONSTRUCTION OF ROADS WITH INCREASE TO TRAVEL LANES				
33 Reconstruction or widening where the reconstructed road or other linear paved facilities (e.g. HOV lanes) will not be for the same purpose, use, capacity or at the same location (e.g. additional motor vehicle lanes, continuous centre turn lane that requires property, i.e. not at the same location)			**<$3M**	**≥$3M**
34 Construction of new roads or other linear paved facilities (e.g. HOV lanes)			**<$3M**	**≥$3M**
RECONSTRUCTION OF BRIDGES WITH INCREASE TO TRAVEL LANES				
35 Reconstruction of a water crossing where the reconstructed facility will not be for the same purpose, use, capacity or at the same location • *Capacity refers to either hydraulic or road capacity but does not include alterations to include or remove facilities for cycling, pedestrians or to support utilities* • *This includes ferry docks*			**X**	

Project Description	Exempt	Eligible for Screening	Schedule B	Schedule C
36a Reconstruction of, or alteration to a structure or the grading adjacent to it when the structure is over 40 years old and has cultural heritage value or interest and the heritage attributes will **not be** conserved in accordance with the recommendations of a Heritage Impact Assessment • *To determine whether a bridge has "cultural heritage value", refer to the MEA's municipal heritage bridge checklist developed with the Ministry of Citizenship and Multiculturalism and posted on the MEA website*			**X**	
36b Reconstruction of, or alteration to a structure or the grading adjacent to it when the structure is over 40 years old and is not found to have cultural heritage value or interest or is found to have cultural heritage value or interest but the heritage attributes will be conserved in accordance with the recommendations of a Heritage Impact Assessment • *To determine whether a bridge has "cultural heritage value", refer to the MEA's municipal heritage bridge checklist developed with the Ministry of Citizenship and Multiculturalism and posted on the MEA website*			**X**	
37 Construction of new water crossings • *This includes ferry docks* • *This does not include culverts. See Projects # 8 and 20.*			**X**	
38 Construction of new grade separations and interchanges			**X**	

Table B: Municipal Water and Wastewater Projects

Project Description	Exempt	Eligible for Screening	Schedule B	Schedule C
DRINKING WATER SYSTEMS – MAINTENANCE, OPERATION, DISTRIBUTION, STORAGE & RETIREMENT				
1 Normal or emergency operational activities (see Glossary definition of "Operation"). Such activities may include but are not limited to the following: • modify, repair, reconstruct existing facilities to provide operational maintenance or other improvements such as reducing odour, insulating of buildings to reduce noise levels and conserve energy, landscaping • on-going maintenance activities • normal operation of water treatment plants • install new service connections, hydrants and appurtenances from existing water mains • maintenance and/or minor improvements to grounds and structures • addition of minor buildings, sheds and equipment and materials storage areas • repairs or cleaning of a well or intake • repairs and renovations to treatments and pumping plant equipment, water storage facilities, distribution mains and appurtenances • installation of corrosion protection systems • cleaning and/or relining existing watermains	**X**			
2 Install chemical or other process equipment or provide additional treatment facilities such as filtration for operational or maintenance purposes in existing pumping stations	**X**			
3 Repairs, renovation, and replacement of existing outfall in the same location for a water treatment plant		**ASP**	**X**	
4a Establish, extend or enlarge water distribution system and all necessary works to connect the system to an existing system, where it is required as a condition of approval on a site plan, consent, plan of subdivision or plan of condominium which will come into effect under the *Planning Act* prior to the construction of the extension of the collection system	**X**			

Project Description	Exempt	Eligible for Screening	Schedule B	Schedule C
4b Establish, extend or enlarge a water distribution system and all works necessary to connect the system to an existing system or water source, provided all such facilities are either in an existing road allowance or an existing utility corridor including the use of Trenchless Technology for water crossings	**X**			
4c Establish, extend or enlarge a water distribution system and all works necessary to connect the system to an existing system or water source, where such facilities **are not** in either an existing road allowance or an existing utility corridor			**X**	
5a Increasing pumping station capacity by adding or replacing equipment where new equipment is located within an existing building or structure	**X**			
5b Increasing pumping station capacity where new equipment is located in a new building or structure and the new building or structure is located on the existing pumping station site, or located on municipally owned lands adjacent to the existing pumping station site where the lands are not in an environmentally sensitive natural area • *Refer to "environmentally sensitive natural area" in the Glossary*		**ASP**	**X**	
5c Increasing pumping station capacity where new equipment is located in a new building or structure and the new building or structure would be located outside the existing pumping station site			**X**	
5d Construct a new pumping station where the facility is not located in or adjacent to an environmentally sensitive natural area, residential or other sensitive land use, or on land with cultural heritage or archaeological potential		**ASP**	**X**	
6a Replace/expand existing water storage facilities provided all such facilities are in either an existing road allowance or an existing utility corridor or where no land acquisition is required	**X**			
6b Replace/expand existing water storage facilities, where additional land must be acquired			**X**	
6c Establish new water storage facilities where the facility is not located in or adjacent to an environmentally sensitive natural area, residential or other sensitive land use, or on lands with cultural heritage or archaeological potential		**ASP**	**X**	

Project Description	Exempt	Eligible for Screening	Schedule B	Schedule C
7 Retire any water infrastructure facility (see Glossary for definition of Retirement)	X			
NEW DRINKING WATER SYSTEMS AND WATER SUPPLY				
8 New water systems for which an approval under the *Safe Drinking Water Act, 2002* is not required	X			
9a Install new or replacement wells or deepen existing wells or increase pumping capacity of existing wells, at an existing municipal well site, where the existing rated yield will not be exceeded	X			
9b Install a new well on an existing municipal well site • *This does not include the construction of a new water system*		**ASP**	X	
9c Deepen or increase the pumping capacity of an existing well where the well is located on an existing municipal well site and the existing rated yield will be exceeded. • *This does not include the construction of a new water system*	X			
9d Establish a well at a new municipal well site			X	
10a Construct new water system including a new well				X
10b Construct new water system including a water distribution system				X
11 Establish a new surface water source				X
12 Artificially recharge an existing aquifer from a surface water source for purposes of water supply				X
WATER TREATMENT FACILITIES				
13 Increase water treatment plant capacity through improvements to operations and maintenance activities only, but without construction of works to expand, modify or retrofit the plant	X			

Project Description	Exempt	Eligible for Screening	Schedule B	Schedule C
14 Install chemical or other process equipment or provide additional treatment facilities such as filtration for operational or maintenance purposes in existing treatment plants	**X**			
15a Expand / refurbish / upgrade water treatment plant up to existing rated capacity where no land acquisition is required	**X**			
15b Expand existing water treatment plant including intake up to existing rated capacity where land acquisition is required			**X**	
15c Construct new water treatment plant or expand existing water treatment plant beyond existing rated capacity				**X**
16 New, expansion or replacement of water intake pipe for a surface water source			**X**	
17 Install sewer connections for disposal of process wastewater		**ASP**	**X**	
18 Establish facilities for disposal of proposal wastewater (e.g. construct holding pond, dewatering and hauling operations to disposal sites) where the facility does not require new property or property is not disturbed, is not a significant drinking water threat in a source water protection area or requires a new outfall or does not discharge to a sensitive receiver, and is not located on lands with cultural heritage or archaeological potential		**ASP**	**X**	

Project Description	Exempt	Eligible for Screening	Schedule B	Schedule C
SEWAGE SYSTEMS – MAINTENANCE, OPERATION, DISTRIBUTION, STORAGE & RETIREMENT				
19 Normal or emergency operational activities (see Glossary definition for Operation). Such activities may include, but are not limited to, the following: • modify, repair, reconstruct existing facilities to provide operational, maintenance or other improvements such as reducing odour, insulating buildings to reduce noise levels and conserve energy, landscaping • on-going maintenance activities • normal operation of sewage treatment plants • installation of new service connections, catch basins and appurtenances from existing sewers • maintenance and/or minor improvements to grounds and structures • addition of minor buildings, sheds and equipment and materials storage areas • repairs, cleaning, renovations or replacement of sewage treatment facilities, pumping plant equipment or outfalls • cleaning, relining, repairs and renovations to existing sewage collection system	X			
20 Install chemical or other process equipment for operational or maintenance purposes in existing sewage collection system or existing sewage treatment facility	X			
21 Retire any wastewater infrastructure facility (see Glossary for definition of Retirement)	X			
22a Establish, extend, or enlarge a sewage collection system and all necessary works to connect the system to an existing sewage outlet, where it is required as a condition of approval on a site plan, consent plan of subdivision or plan of condominium which will come into effect under the *Planning Act* prior to the construction of the collection system	X			
22b Establish, extend, or enlarge a sewage collection system and all necessary works to connect the system to an existing sewage or natural drainage outlet, provided all such facilities are in either an existing road allowance or an existing utility corridor, including the use of Trenchless Technology for water crossings	X			
22c Establish, extend or enlarge a sewage collection system and all works necessary to connect the system to an existing sewage outlet where such facilities are not located in an existing road allowance, or existing utility corridor			X	

Project Description	Exempt	Eligible for Screening	Schedule B	Schedule C
23a Increase pumping station capacity by adding or replacing equipment and appurtenances, where new equipment is located in an existing building or structure	X			
23b Increase pumping station capacity where new equipment is located in a new building or structure and the new building or structure is located on the existing pumping station site, or located on municipally owned lands adjacent to the existing pumping station site where the lands are not in an environmentally sensitive natural area • *Refer to "environmentally sensitive natural area" in the Glossary*		ASP	X	
23c Increase pumping station capacity where new equipment is located in a new building or structure and the new building or structure would be located outside the existing pumping station site			X	
24d Construct new pumping station where the facility is not located in or adjacent to an environmentally sensitive natural area, residential or other sensitive land use, or on land with cultural heritage or archaeological potential		ASP	X	
25 Communal sewage systems (new or expanded) with subsurface effluent disposal subject to approval under Section 53 of the *Ontario Water Resources Act*			X	
26 A new municipal holding tank that is designed for the total retention of all sanitary sewage disposed into it and requires periodic emptying			X	
27 Construct new sewage system, including outfall to receiving water body and/or a constructed wetland for treatment				X
SEWAGE TREATMENT FACILITIES				
28a Increase sewage treatment plant capacity beyond existing rated capacity through improvements to operations and maintenance activities only, but without construction of works to expand, modify or retrofit the plant or the outfall to the receiving the water body, with no increase to total mass loading to receiving water body as identified in the Environmental Compliance Approval	X			
28b Increase sewage treatment plant capacity beyond existing rated capacity through improvements to operations and maintenance activities only but without construction of works to expand, modify or retrofit the plant or the outfall to the receiving water body			X	

Project Description	Exempt	Eligible for Screening	Schedule B	Schedule C
where there is an increase to total mass loading to the receiving water body as identified in the Environmental Compliance Approval				
29a Expand / refurbish / upgrade sewage treatment plant including outfall up to existing rated capacity where no land acquisition is required	X			
29b Expand sewage treatment plant, including relocation or replacement of outfall to receiving water body, up to existing rated capacity where new land acquisition is required			X	
29c Construct new sewage treatment plant or expand existing sewage treatment plant beyond existing rated capacity including outfall to receiving water body				X
30a Establish sewage flow equalization tankage for influent and/or effluent control within existing sewer system or at existing sewage treatment plants, or at existing pumping stations where no property acquisition is required		**ASP**	X	
30b Establish sewage flow equalization tankage for influent and/or effluent control within existing sewer system, at existing sewage treatment plant, or at existing pumping station where property must be acquired for the infrastructure			X	
31a Provide additional treatment facilities in existing lagoons, such as aeration, chemical addition, post treatment, including expanding lagoon capacity up to existing rated capacity, provided no land acquisition nor additional lagoon cells are required	X			
31b Add additional lagoon cells or establish new lagoons or install new or additional sewage storage tanks at an existing sewage system, where land acquisition is required but existing rated capacity will not be exceeded			X	
31c Establish new lagoons or expand existing lagoons or install new or additional sewage storage tanks which will increase beyond existing rated capacity				X
32a Expansion of the buffer zone between a lagoon facility or land treatment area and adjacent uses where the buffer zone is entirely on the proponent's land	X			

Project Description	Exempt	Eligible for Screening	Schedule B	Schedule C
32b Expansion of the buffer zone between a lagoon facility or land treatment area and adjacent uses, where the buffer zone extends onto lands not owned by the proponent			X	
33a Dispose of, utilize, or manage biosolids on an interim basis (e.g. further treatment in drying beds, composting, temporary holding at transfer stations), at: a) An existing sewage treatment plant where the biosolids is generated, or b) An existing landfill site, incinerator or organic soil conditioning site, where the biosolids is to be utilized or disposed of	X			
33b Establish a new biosolids organic soil conditioning site	X			
33c Establish biosolids management facilities at: a) A sewage treatment plant where the biosolids were not generated b) An existing landfill site, incinerator or organic soil conditioning site where the biosolids are not to be disposed of nor utilized			X	
33d Establish a new biosolids landfill site or new biosolids incineration site for purposes of biosolids disposal				X
34 Establish a new transfer station or new storage lagoon not located at a sewage treatment plant, incinerator, landfill site, or organic soil conditioning site, for purposes of biosolids management				X
35 Construct new sanitary or combined sewage retention / detention facility at a new location				X
36 Provide for land application of sewage effluent through spray irrigation system or overland flow				X
STORMWATER MANAGEMENT SYSTEMS				
37 Roadside ditches, culverts and other such incidental stormwater works constructed solely for the purpose of servicing municipal road works	X			
38a Establish new or modify, retrofit or improve LID features within an existing road allowance or an existing utility corridor		**ASP**	X	

Project Description	Exempt	Eligible for Screening	Schedule B	Schedule C
38b Establish new or modify, retrofit or improve LID features where property acquisition is required			X	
39 Modify, retrofit, or improve a retention/detention facility including outfall or infiltration system for the purpose of stormwater quality control. Biological treatment through the establishment of constructed wetlands is permitted • *Note – Biological treatment refers to passive treatment systems*	X			
40a Establish new or replace or expand existing stormwater detention/retention ponds or tanks and appurtenances including outfall to receiving water body provided all such facilities are in either an existing utility corridor or an existing road allowance where no additional property is required	X			
40b Establish new or replace or expand existing stormwater detention/retention ponds or tanks and appurtenances including outfall to receiving water body where all such facilities are not located in an existing utility corridor, or an existing road allowance or where property acquisition is required			X	
41 Construct a stormwater control demonstration or pilot facility for the purpose of assessing new technology or procedures.			X	
42 Establish stormwater infiltration system for end-of-pipe control and/or for groundwater recharge • *This does not include LID features*			X	
43 Construct new or modify, retrofit or improve existing retention/detention facility or infiltration system for the purpose of stormwater quality control where **active** chemical or biological treatment or disinfection is included, including outfall to receiving water body				X
44 Construction of stormwater management facilities which are required as a condition of approval on a consent, site plan, plan of subdivision or condominium which will come into effect under the Planning Act prior to the construction of the facility. • *This includes LID features*	X			
WATER CROSSINGS				

Project Description	Exempt	Eligible for Screening	Schedule B	Schedule C
22b Establish, extend, or enlarge a sewage collection system and all necessary works to connect the system to an existing sewage or natural drainage outlet, provided all such facilities are in either an existing road allowance or an existing utility corridor, including the use of Trenchless Technology for water crossings	X			
4b Establish, extend or enlarge a water distribution system and all works necessary to connect the system to an existing system or water source, provided all such facilities are in either an existing road allowance or an existing utility corridor, including the use of Trenchless Technology for water crossings	X			
45 Water crossing for a new or replacement water or sewage facility where the facility will be supported by an existing bridge or structure and the project does not involve in-water works or significant modifications to the bridge or structures piers or abutments; the bridge or structure does not have cultural heritage value; and additional property is not required		ASP	X	
46 Water crossing for a new or replacement water or sewage facility where the project is not otherwise described in this table			X	
SHORELINE/IN WATER WORKS				
47 Replace traditional materials in an existing watercourse or in slope stability works with material of equal or better properties, at substantially the same location and for the same purpose	X			
48 Reconstruct an existing dam weir at the same location and for the same purpose, use and capacity	X			
49 Construct berms along a watercourse for purposes of flood control in areas subject to damage by flooding			X	
50 Modify existing water crossings for the purposes of flood control			X	
51 Works undertaken in a watercourse for the purposes of flood control or erosion control, which may include: • bank or slope regrading • deepening the watercourse			X	

Project Description	Exempt	Eligible for Screening	Schedule B	Schedule C
• relocation, realignment or channelization of watercourse • revetment including soil bio-engineering techniques • reconstruction of a weir or dam				
52 Construction of spillway facilities at existing outfalls for erosion or sedimentation control			X	
53 Construct a fishway or fish ladder in a natural watercourse, expressly for the purpose of providing a fishway			X	
54 Reconstruct existing weir or dam at the same location where the purpose, use and/or capacity are changed			X	
55 Removal of an existing weir or dam			X	
56 Enclose a watercourse in a storm sewer			X	
57 Construction of a diversion channel or sewer for the purpose of diverting flows from one watercourse to another				X
58 Construct new shore line works, such as off-shore breakwaters, shore-connected breakwaters, groynes and sea walls				X
59 Construct a new dam or weir in a watercourse				X
OTHER PROJECTS				
60 Installation and operation of standby power equipment	X			
61 Construct new or expand/modify existing service facilities (e.g. patrol yards, storage and maintenance facilities, parking lots for service vehicles) provided project is subject to *Planning Act* requirements and conforms with municipal and other requirements	X			
62 Projects planned and approved under Ontario Regulation 586/06: Local Improvement Charges – Priority Lien Status (see Section A.2.10.4)	X			

Project Description	Exempt	Eligible for Screening	Schedule B	Schedule C
63 Any water, wastewater or stormwater project classified as a Schedule B or C undertaking where the proponent determines that the work must be undertaken to address an emergency and the Director of the EAB is notified, and the Conservation Authority where relevant. A situation created by intentional delay does not constitute an emergency. • *Notice should be provided as soon as possible, or within 30 days at the latest*	X			

Table C: Municipal Transit Projects

Project Description	Exempt	Eligible for Screening	Schedule B	Schedule C
MAINTENANCE AND SERVICE OPERATIONS				
1 General maintenance of all transit-related facilities including but not limited to: • Normal or emergency operation and maintenance of transit facilities and related facilities • Resurfacing, patching and frost heave treatment with no change in footprint • Rehabilitation and internal modifications to existing buildings and facilities • Plowing and sanding of transit facilities and related facilities • Shaping and cleaning of existing roadside ditches and culverts • Parking lot and lighting rehabilitation; • Building rehabilitation or replacement; • Facility surveillance, control systems; etc. • Snow and de-icing operations that comply with MECP's Guidelines	X			
2 General service operations provisions including but not limited to: • Service Changes and Operational Changes on existing routes; • Temporary service to special events on non-regular routes; • Short-term changes to existing routes (both mode and location); • New, extended or expanded bus routes on existing roads	X			
3 New, extended or expanded transit stops (including roadside shelters on road bays and platforms)	X			
MODIFICATION AND RECONSTRUCTION OF EXISTING FACILITIES				

Project Description	Exempt	Eligible for Screening	Schedule B	Schedule C
4a Construction of localized operational improvements at specific locations (i.e. stopping lanes, access lanes, turning lanes, queue jump lanes, and roadway access ramps etc) with no or minimal adverse environmental effects	X			
4b Construction of localized operational improvements at specific locations (i.e. stopping lanes, access lanes, turning lanes, queue jump lanes, and roadway access ramps etc) with the potential for some adverse environmental effects			X	
5 Installation, construction or reconstruction of traffic control devices (i.e. signing, signalization)	X			
6 New Intelligent Transportation System elements for transit systems (e.g. signal priority for transit)	X			
7 Installation of safety projects (i.e. lighting, glare screens, safety barriers, energy attenuation)	X			
8a Culvert repair or replacement where the capacity of the culvert is not increased beyond the minimum municipal standards or capacity required to adequately drain the area, whichever is greater and where there is no change in drainage area	X			
8b Culvert repair or replacement where the capacity of the culvert or drainage area is changed	X			
9a Reconstruction of water crossing where the reconstructed facility will be for the same purpose, use, capacity and at the same location as the facility being reconstructed (capacity refers to hydraulic capacity)	X			
9b Reconstruction of water crossing where the reconstructed facility will not be for the same purpose, use, capacity and at the same location as the facility being reconstructed (capacity refers to hydraulic capacity)			X	

Project Description	Exempt	Eligible for Screening	Schedule B	Schedule C
10a Reconstruction of linear components of a transit system where the reconstructed facility will be for the same purpose, use, and at the same location as the facility being reconstructed (e.g. resurfacing of an existing Reserved Bus Lane (RBL) or reconstruction of existing streetcar track)	X			
10b Reconstruction, widening or expansion of linear components of a transit system where the reconstructed facility will not be for the same purpose, use, and at the same location as the facility being reconstructed (e.g. a change from an existing Reserved Bus Lane (RBL) that is separated from general purpose lanes by signage and pavement markings only to a Reserved Bus Lane (RBL) in an exclusive right-of-way (i.e. physically separated from general purpose lanes)				X
11 Redesignation of an existing General Purpose Lane (GPL) or High Occupancy Vehicle (HOV) lane to a transit lane through signage and pavement marking modifications (i.e. not requiring physical construction)	X			
12 Reconstruction of linear components of a transit system for different vehicle technology where there is no change in footprint or general purpose traffic operations			X	
13 Reconstruction of stations, maintenance/storage facilities, passenger pick-up/drop off areas (e.g. Kiss and Ride), park and ride lots, etc. where no land acquisition is required	X			
14 Expansions, improvements and modifications to existing stations, maintenance and storage facilities, passenger pick-up/drop off areas (e.g. Kiss and Ride), park and ride lots, etc.	X			
CONSTRUCTION OF NEW FACILITIES				
15a Construction of new stations **not** in or adjacent to residential land-use or an environmentally sensitive area including natural heritage features, cultural heritage and archaeological resources, recreational or other sensitive land uses	X			
15b Construction of new stations in or adjacent to residential land-use or an environmentally sensitive area including natural heritage features, cultural heritage and archaeological resources, recreational or other sensitive land uses			X	

Project Description	Exempt	Eligible for Screening	Schedule B	Schedule C
16a Construction of new passenger pick-up/drop off areas (e.g. kiss and ride), and park and ride lots **not** in or adjacent to residential land-use or an environmentally sensitive area including natural heritage features, cultural heritage and archaeological resources, recreational or other sensitive land-uses	X			
16b Construction of new passenger pick-up/drop off areas (e.g. kiss and ride), and park and ride lots in or adjacent to residential land-use or an environmentally sensitive area including natural heritage features, cultural heritage and archaeological resources, recreational or other sensitive land-uses			X	
17 Widening of an existing road to create new transit lanes for bus or light rail				X
18 Construction of a new electrical substation associated with an existing transit facility	X			
19 Construction of a transit loop	X			
20 Construction of new grade separation				X
21a Construction of new maintenance facilities **not** in or adjacent to residential land-use or an environmentally sensitive area including natural heritage features, cultural heritage and archaeological resources, recreational or other sensitive land-uses	X			
21b Construction of new maintenance facilities in or adjacent to residential land-use or an environmentally sensitive area including natural heritage features, cultural heritage and archaeological resources, recreational or other sensitive land-uses				X
22a Construction of new storage facilities **not** in or adjacent to residential land-use or an environmentally sensitive area including natural heritage features, cultural heritage and archaeological resources, recreational or other sensitive land-uses	X			
22b Construction of new storage facilities in or adjacent to residential land-use or an environmentally sensitive area including natural heritage features, cultural heritage and archaeological resources, recreational or other sensitive land-uses			X	

Project Description	Exempt	Eligible for Screening	Schedule B	Schedule C
23 Construction of a new Transit System i.e. involving construction of new infrastructure. (For implementation of new transit services not requiring construction of new infrastructure i.e. using existing roads see Project # 2.)				X
MISCELLANEOUS PROJECTS				
24 Construction of noise barriers (i.e. structures such as walls and berms or a combination of the two)	X			
25 New fence installations not associated with another project	X			
26 Utility removal, modification or relocation for safety, operational or aesthetic purposes	X			
27 Restoration of a facility immediately after a natural or man-made disaster provided the facility is for the same purpose, use, and at the same location	X			
28 Temporary, not permanent, activity with a defined duration and with the intent to go back to the original condition, unless it is determined to make it a permanent condition which would have to be approved through the Class EA process where applicable	X			
29 Decommissioning of existing major transit facilities (i.e. facilities requiring construction activities for decommissioning)	X			

Appendix 2: Mitigating Measures for Potential Adverse Environmental Effects

Sections B.3.3 and C.3.3 and D.3.3 refer to the mitigation of potential adverse environmental effects. This Appendix provides examples of possible site-specific situations and the measures which might be taken to mitigate the effects identified.

This list is illustrative only and the proponent must identify project-specific effects during the planning and design process and document these and the appropriate mitigating measures.

With any potential adverse environmental effects, the objectives are to avoid, prevent or minimize impacts.

Reference to the Provincial Policy Statement issued under the *Planning Act* and associated reference manuals, may also be useful.

Effect	Mitigating Measures	Application Where/When
SURFACE DRAINAGE SYSTEM		
Sedimentation and turbidity of adjacent water bodies	• erosion control measures • buffers and setbacks • sediment traps • staging work • bio-engineering techniques	After site grading and during construction on slopes and channels Collect sediment before entering drainage channel During biologically critical periods
Ponding effects on adjacent properties due to natural drainage disruption	• appropriate use of culverts, porous backfill and tile drains • apply natural channel design principles	In new construction projects and expansion
Streambank erosion from diversion, construction or channelization of watercourse	• erosion control measures • bio-engineering techniques	River crossings, drainage outlets
Contamination of surface waters through runoff, spills, leaks and disinfection activities	• provision for spill control • fast accurate reporting of spill • spill containment • stockpile materials or devices for spill control	As a general practice and particularly in vicinity of water bodies, wetlands

Effect	Mitigating Measures	Application Where/When
	• avoid adverse soil conditions • monitor facility for leaks • implement disinfection techniques in concert with fisheries requirements • pollution prevention and source control by best management land use practices and best management stormwater practices. • buffers and setbacks • install check dams on drainage swales	
Blasting exposes rocks containing soluble minerals that could potentially contaminate surface water supply, i.e. sulfate, lead, arsenic	• subsurface investigation, i.e. geochemical analysis of bedrock • avoid blasting in areas containing toxic materials	Areas of shallow soil over relevant bedrock type (normally occurring in Canadian Shield)
Changes in volume of surface runoff	• use design measures to minimize increase in surface runoff	New impervious surfaces
Changes in flood storage capacity by placing fill and structures in floodplain	• avoid placing fill and structures in floodplain or compensate • flood and fill permits from Local Conservation Authority	Construction within river valleys. Disposal of excess fill.
GROUNDWATER		
Through blasting, expose rocks containing soluble minerals that could potentially contaminate groundwater, e.g. sulfate, lead, arsenic	• subsurface investigation, i.e. geochemical analysis of bedrock • avoid blasting in areas containing toxic minerals	Areas of shallow soil over bedrock. Rock cuts and excavations.
Interference of shallow aquifers and springs	• hydrogeologic investigation to identify such areas in advance • develop alternatives to avoid impacts	Excavations
Reduce groundwater quantity through construction dewatering	• locate construction activities • away from groundwater users and water bearing formations (soils) where possible • proper dewatering techniques	Depletion or lowering of shallow aquifers and springs by groundwater utilization

Effect	Mitigating Measures	Application Where/When
	• seasonal constraints on construction	
Spills or leaks resulting in contamination of groundwater supply	• construction refueling precautions • land filling precautions • operation and storage precautions	Near watercourses and on site generally. Areas of high infiltration capability.
Drainage of wetland areas resulting in a reduced groundwater contribution to surface waterbodies	• avoid wetland areas • utilize appropriate backfill material, i.e. high permeable backfill is unsuitable	Trenching, excavation, placing fill, dewatering
Reduced surface water recharge to groundwater particularly in soils with high permeability	• restrict extent of impervious surfaces in zones of high permeability	Subsurface barriers, e.g., foundations, areas of impervious
Interference with groundwater movement	• maintenance of the existing groundwater regime through engineering design	Excavations, drainage, construction, dewatering, e.g. in roadbeds, foundations and trenches
Contaminations of adjacent wells through runoff from construction	• erosion and sediment control • locate projects appropriately • setbacks	Construction adjacent to well sites and exposed aquifers
FISH, AQUATIC WILDLIFE AND VEGETATION		
Introduction of warmer water from ponds into colder surface watercourse	• appropriate selection of ponding site • pond design • infiltrate into groundwater system • planting to provide shade	Dewatering of trench and excavations. Sediment traps. Extend detention ponds.
Modification or removal of aquatic habitat; displacement of plants and animals	• stage work to non-critical times • restore stream substrate • choose suitable site for stream diversions • seasonal constraints	During construction, e.g. river crossings, dewatering of excavations

Effect	Mitigating Measures	Application Where/When
Reduced water quality of nearby surface water having value as wildlife habitat	• provisions for spill control • fast and accurate reporting of spill • spill containment • stockpile materials or devices for spill control • avoid adverse soil conditions • minimize tree removal • buffers and setbacks	Storm sewers, ditches, diversions and by-passing
Timing effects of construction on spawning, nesting and breeding periods	• staging of work to avoid spawning and breeding periods • seasonal constraints for cold and warmwater systems	For stream crossings and diversions
Lowering of water table resulting in reduced contribution to streams and stress of riparian vegetation	• design to maintain existing groundwater flows • restrict extent of impervious surfaces in zones of high infiltration	Dewatering of trenches, excavations and aquifers. Areas of newly created impervious surfaces.
Increased nutrient loading of existing habitats	• buffers and setbacks • provisions for spill control • land filling precautions	Near watercourses and on site generally.
Drainage of wetland areas causing mortality or stress to animals and possible changes in species composition	• maintain existing groundwater regime • avoid wetland areas • utilize appropriate backfill material,	Trenching or excavating
Siltation to surface watercourses resulting in “smothered” plants and animals due to the deposition of silt and increased turbidity of surface watercourses	• utilize suitable backfill material • trench drainage should be discharged to settling areas before being permitted to enter surface waterbodies • erosion control measures • staging of work	Road bed and ditch construction. Storm sewer outfalls. Erodible soils, stockpiles.
Stress on biological communities	• consider the carrying capacity of the local natural environment	Municipal infrastructure is necessary to service projected municipal / population growth. This increases

Effect	Mitigating Measures	Application Where/When
	• avoid sensitive periods such a breeding seasons	stress on recreational and natural resources.
Tree removal will affect the amount of sunlight reaching waters and affect plan productivity and increase watercourse temperatures	• avoid tree removal near surface waterbodies • restoration planting	Stream crossings
TERRESTRIAL VEGETATION AND WILDLIFE		
Introduction of exotic plant species through erosion control restoration	• restoration planting • use annuals which later die out • use indigenous (native) species only	On slopes and other areas to control erosion. In any distribution area requiring restoration work.
Changes in vegetative composition as a result of loss of topsoil and subsoil or mixing	• restore site by replacing soils in preconstruction horizons	Trenching or excavating
Removal or disturbance of significant trees and/or ground flora	• review status of species • avoid these areas • employ tree protection measures	During site grading and construction phase of any project
New or increased exposure of forest edge with resultant effects of windthrow, leading to loss of habitat for wildlife	• avoid woodlots and similar areas • pre-stress woodlots • restore edges	During site grading and construction phase of any project
Mortality / stress due to changes in soil moisture conditions, resulting in loss of wildlife habitat	• minimum fragmentation of forest habitat • avoid poorly drained areas • use of appropriate roadbed and backfill materials • revegetation using indigenous species able to survive new conditions	During construction of roadbed and storm sewers

Effect	Mitigating Measures	Application Where/When
HERITAGE RESOURCES		
Deterioration of sites, structures or landscapes having archaeological, historical or architectural values, as a result of environmental changes	• avoid where possible • employ necessary steps to decrease harmful environmental impacts such as vibration, alterations of water table, etc.	Where appropriate with respect to archaeological, historical or architectural resources
Unwanted increase in public access and potential vandalism	• fence off area of concern • prevent public access	Where appropriate with respect to archaeological heritage resource
Threatened viability of, or opportunity for, retention of sites having heritage value	• avoid these areas • record or salvage information on features to be lost	Where appropriate with respect to significance of the heritage recourse
Unavoidable alteration to or destruction of heritage structures or archaeological sites	• record or salvage information on features to be lost	Where appropriate with respect to significance of the heritage resource
Disruption of quiet enjoyment	• staging of construction to cause least disruption • employ noise and dust control measures	As general practice.
AGRICULTURAL		
Soil contamination by chemicals	• minimize use of de-icing materials • establish and enforce chemical handling standards • provide for emergency clean-up and soils replacement	As general practice.
Loss of productive farmland	• avoid prime agricultural areas • direct where possible to non-agricultural designations • locate and design facilities so as to minimize land requirements and construction disturbance • rehabilitate disturbed areas	In agricultural and rural areas.

Effect	Mitigating Measures	Application Where/When
Disruption of field access	• minimize severance of farm properties • provide alternative access points at critical times	In agricultural and rural areas.
Disturbance of livestock by noise and dust during construction	• employ noise and dust control measures	In agricultural and rural areas.
Disruption of tile and surface drainage systems	• stage construction work • restore tile and surface drainage system	In agricultural and rural areas.
Loss of biosolids use as fertilizer	• improve biosolids quality	In agricultural and rural areas.
Decrease in groundwater	• design to minimize dewatering effects • provide recharge	In agricultural and rural areas.
Facilities inconsistent with or disrupt character of prime agricultural area	• avoid prime agricultural areas • avoid major capital infrastructure, i.e. barns, dryers, etc. • comply with MDS	In agricultural and rural areas.
Climate change on which crops including specialty crops depend	• avoid and design facilities so as to not adversely disrupt the micro-climate (cold air drainage) on which crops depend	In agricultural and rural areas Specialty crop designation in Municipal Official Plans.
Effects of physical changes in operation due to property loss	• compensation	In agricultural and rural areas.
Loss of infrastructure	• avoid major capital investments in infrastructure • avoid major livestock facilities	In agricultural and rural areas.
RESIDENTIAL, INSTITUTIONAL, COMMERCIAL AND INDUSTRIAL		
Disruption of pedestrian movements between adjacent uses	• maintain continuity of pedestrian walkway system as much as possible • provide walkway strips to adjacent residential areas	As general practice. Where suitable.
Disruption of tourism facilities	• stage construction • employ noise and dust control measures • provide crosswalks and sidewalks at access points	As general practice. Where suitable.

Effect	Mitigating Measures	Application Where/When
Facilities inconsistent with or which disrupt character of area	• preserve existing amenities as much as possible • design and site structures to blend with adjacent building forms and materials • site grading; utilize berms or other screening devices	As general practice. Where suitable.
Temporary disruption during construction and/or inconvenience to users of adjacent properties and building	• notify public agencies and adjacent owners of construction scheduling • prepare emergency program to ensure quick resolution of servicing problems • consult with public agency and/or adjacent landowners regarding temporary access routes • schedule construction so as to minimize period of disruption in proximity of adjacent uses and structures • ensure access for emergency response vehicles / personnel • apply noise and vibration control measures (use quieter equipment, maintain equipment properly)	Where substantial inconvenience or disruption to adjacent uses would be experienced and where measures would substantially reduce effects. As general practice.
Removal of residences and other buildings	• co-ordinate removal program to minimize inconvenience • carry out heritage assessment as appropriate	As general practice.
OUTDOOR RECREATION		
Temporary disruption of open space activities during construction	• employ noise and dust control measures • staging of construction to cause least disruption	In areas within or adjacent to public open space.
Effects of physical changes in layout of recreational uses due to property loss	• compensate by providing facilities elsewhere	In areas within or adjacent to public open space.

Effect	Mitigating Measures	Application Where/When
SOILS GEOLOGY		
Erosion by wind, water and ice	• restoration planting • stage work • avoid highly erodible soils • stabilize slopes • compaction • chemical stabilizers • gravel blankets • seeding • sodding • toe drainage	Erodible soils in excavations, cut and fill areas. Stockpiles, cut slopes.
Slumping of encroached slopes	• avoid potentially unstable slopes • mechanical stabilization methods • revegetation (only effective once the root infrastructure has developed) • restrict dewatering near slopes • engineering design to control potential slumping	Steep slopes. Cut slopes. Removal of the toe of a slope during construction. Dewatering.
Rockfall hazard	• buffer zone • initiate rockfall at potential failures	Blasting. Steep weathered slopes.
Loss of aggregate and mineral resources	• avoid sites of aggregate and mineral reserves • extract aggregate and minerals prior to construction	Zones of economic aggregate and mineral occurrence.
Contamination of soils by petro-chemicals, etc.	• remedial measures to avoid spills and leaks • contingency plan for clean-up	During construction.
Mixing of topsoil with subsoil	• stripping and stockpiling of topsoil separate from subsoil	Generally in areas of undisturbed soils.
TOPOGRAPHY / LANDFORMS		

Effect	Mitigating Measures	Application Where/When
"Scarring" of significant landscape features	• avoid significant features	Designation of significant feature, i.e. landmark.
CLIMATIC FEATURES		
Drought, increased flooding, changes in water levels, increases in surface water runoff due to extreme weather events and climate change	Consider the following: • Design associated drainage and storm ponds to manage extreme weather events • Use of pervious pavement or reduce impervious pavement and other low impact development methodologies to manage or reduce storm water runoff and on-site flow control • Increase elevations of structures over waterways • Increased capacity of sewer and treatment systems to accommodate additional flows • Monitoring and adaptive management to manage flow rates • Artificial destratification to manage evaporation • Stormwater runoff to roadside ditches and/or grassed swales • Back-up features and infrastructure for upset conditions and emergency response procedures (e.g. standby	Construction in close proximity to buildings or activity areas

Effect	Mitigating Measures	Application Where/When
	power for water and waste water facilities) • Water conservation and efficiency through leakage/loss detection and prevention in distribution system	
Cracked concrete during freeze thaw cycles; deterioration of roadway/structures sooner than anticipated	Consider using materials resilient to freeze-thaw effect and salting, and survive higher temperatures	Design and construction
PUBLIC HEALTH		
Exhaust emissions from construction equipment and vehicles	• minimize operation on site, control location on site	Where adjacent uses or natural vegetation could be adversely affected
Effects on groundwater elevation of existing subsurface sewage disposal systems e.g. septic systems	• monitor groundwater levels and, if necessary, take appropriate action	Where appropriate
Groundwater contamination	• construction refueling precautions • fill design and operation precautions • precautions in operation and storage facilities • containment of leachate maintenance facilities	On site generally.
Effects of emergency by-passing of sewage	• contact potentially affected government agencies and public downstream within 24 hours of by-pass event	In all cases.
OPERTIONAL AND CONSTRUCTION NOISE		
Proximity to noise sensitive land uses (e.g. hospitals); insufficient setbacks;' road grades (steep hills); high traffic volumes; poor road surface; stopping	• relocate major roads away from sensitive land uses, divert traffic • reduce grades of hills	As general practice. Construction in urban areas.

Effect	Mitigating Measures	Application Where/When
/ starting of truck traffic; operation of construction equipment	• use appropriate asphalt surface to reduce tire noise • institute truck prohibitions • construct noise barriers • modify speed limits • proper maintenance of equipment	

Appendix 3: Recommended Agency Contacts

The table below identifies those review agencies that a proponent should contact based on the nature of the environment in which the project will be implemented and the potential effects a project may have. Proponents are not limited to those agencies identified in the table below. The proponent is responsible for determining the appropriate agencies to contact.

The following guidelines are expected to be useful to proponents developing projects under Schedules B or C. Reference to the Provincial Policy Statement issued under Section 3 of the Planning Act, and associated reference manuals, would also be useful.

Abbreviations:

ECCC	Environment and Climate Change Canada
MCM	Ministry of Citizenship and Multiculturalism
MECP	Ministry of the Environment, Conservation and Parks
MMAH	Ministry of Municipal Affairs and Housing
MND	Ministry of Northern Development
MINES	Ministry of Mines
MNRF	Natural Resources and Forestry
MTO	Ministry of Transportation
DFO	Fisheries and Oceans Canada

Works Directly Affecting	Example	Contact
Permanent and intermittent water courses and waterbodies, navigable waterways	• rivers • streams, creeks • marshes, bogs • lakes, ponds • outfalls, crossings • municipal drains	• Conservation Authority • Local MNRF Office (in all cases) • MECP Regional Office (or other appropriate MECP offices) • DFO - Habitat Management • ECCC
Groundwater	• wells, aquifers • groundwater recharge areas	• Local Health Unit and/or MECP Regional Office • Local MNRF Office
Navigable Waterways	• navigable waterways	• Transport Canada
Rare, endangered or significant assemblage of wildlife fish and plant species	• list pursuant to the Endangered Species Act • game species • regionally significant wildlife, fish or flora	• MECP Species at Risk Branch • Conservation Authority • COSEWIC • ECCC
Migratory Birds	• migratory birds	• ECCC
Fisheries, fish habitat	• rivers, lakes • navigable waters • highways	• Local MNRF Office • Conservation Authority • DFO - Habitat Management

Works Directly Affecting	Example	Contact
Environmentally sensitive area	• ESA as defined and identified on OP or in MNRF's or Conservation Authority's plans	• Local MNRF Office • MECP • Conservation Authority • Local/Regional Municipality
Hazard Lands	• unstable soils • steep slopes • floodplain land	• Local MNRF Office • Conservation Authority • Local/Regional Municipality
Woodlots	• Agreement Forests • Significant Woodland	• Local MNRF Office • Local/Regional Municipality
Natural Heritage Features	• provincially, regionally and locally significant natural heritage features (such as significant woodlots and wetlands) and associated ecological functions • National Wildlife areas	• Regional and local municipality • Local MNRF Office • Conservation Authority • MECP Regional Office • ECCC
Ornamental or Street Trees	• trees on municipal land	• Owner of property immediately • adjacent to lands containing trees • municipal staff responsible for trees
Recreational Areas	• Provincial Parks and park reserves • Conservation areas • Niagara Parks Commission • National Parks • Heritage Lands • Municipal Parks, open spaces and trail system	• Owner of recreational property • MCM • Local MNRF Office • MECP - Parks • Conservation Authority • Local/Regional Municipality • Canadian Heritage - Parks Canada
Tourist Facilities	• motels • restaurants, scenic lookouts	• MCM
Historical or Archaeological Resources	• historic buildings • heritage structures (e.g. bridges) • scenic areas • archaeological sites (historic and pre-historic) • historic regions, e.g. Rideau-Trent-Severn Corridor	• MCM • Local Heritage or Historical Group including Local Architectural Conservation Advisory Committee (LACAC) • Canadian Heritage • Indigenous Communities

Works Directly Affecting	Example	Contact
	• cultural heritage landscapes	
Indigenous Community Traditional Territories and Reserves	• roadways • sewage and water facilities • places of importance for reasons of traditional use, sacred significance and cultural and natural heritage significance	• Indigenous Communities • MECP Regional Office
Social Service Facilities	• homes for the aged • psychiatric homes • group homes • hospitals	• Ministry of Children, Community and Social Services - District Office
Transportation Service Facilities	• highways • navigable waters / harbours • St. Lawrence Seaway • airports • railway crossings	• MTO - District Office and Regional Manager of Engineering and Right-of-Way • Transport Canada Canadian Transportation Agency
Utilities	• electrical, telephone, oil, gas pipelines	• Hydro One • Local Utility Companies
Sensitive or Special Planning Areas	• regionally significant growth centres • major industrial parks, subdivisions • development in Northern Ontario • areas with potential for tourism development / designation	• MMAH • Ministry of Economic Development and Trade • MND • MCM • Local/Regional Municipality
Prime agricultural areas and specialty crop areas	• areas designated for prime agricultural in Municipal Official Plans and/or areas where soil Classes 1, 2 and 3 predominate	• Ontario Ministry of Agriculture, Food and Rural Affairs • Local Agricultural Representative • Local/Regional Municipality
Where project is being either partially or entirely federally funded or involves federal land	• federal infrastructure programs • sale or leasing of federal lands	• funding agency or land owner
Works directly affecting “Great Lakes interconnecting channels”	• St. Mary’s River • St. Clair River • Detroit River • Niagara River	• Local MNRF Office (in all cases) • DFO - Canadian Coast Guard

Works Directly Affecting	Example	Contact
	• St. Lawrence River	• DFO - Habitat Management • ECCC • Foreign Affairs and International Trade • MECP
Niagara Escarpment Planning Area		• Niagara Escarpment Commission
Parkway Belt Planning Area		• MMAH - Provincial Planning and Environmental Services Branch
Oak Ridges Moraine		• MNRF • MMAH
Planning Act and Provincial Policy Statements	• where the Ministry of Municipal Affairs and Housing is the Planning Act approval authority • where an inter-jurisdictional project is contemplated • where new services would substantially increase growth capability outside an urban designation	• MMAH - Provincial Planning and Environmental Services Branch • appropriate *Planning Act* approval authority where it is not MMAH
IN ALL CASES	• every situation	• MECP EA Coordinator (Regional Email Address) • property owners adjacent to project site • local area municipality (as appropriate) • local regional municipality (as appropriate) • County or Planning Board potentially affected members of the public, landowners and adjacent municipalities
Contaminated Sites	• current or historical waste disposal sites • current or abandoned mine sites/feature	• MECP regional office • MND and MINES (for mines)

Works Directly Affecting	Example	Contact
	• Canada Ontario Agreement Areas of Concern	• ECCC
Source Water Protection	Vulnerable Areas as defined by the Clean Water Act	• Source Protection Authority • MECP Regional Office, Source Protection Programs Branch • Conservation Authority
Air Quality	Local and regional air quality	MECP Regional Office

Appendix 4: Master Plans

4.1 Introduction

This appendix should be read in conjunction with Section A.2.7 of Part A. Master Plans are long range plans which integrate infrastructure requirements for existing and future land use with EA planning principles. These plans examine an infrastructure system(s) or group of related projects to outline a framework for planning for subsequent projects and/or developments. At a minimum, Master Plans must follow the same steps as Phases 1 and 2 of the MCEA process.

The master planning approach recognizes that there are real benefits to the process when comprehensive plans are undertaken for projects which have some commonalities, such as geography or function. A Master Plan provides a municipality with a broad framework through which the need and justification for specific projects can be established and the MCEA process can be satisfied. Master Plans are discussed in Section A.2.7 while additional explanatory information and sample notices in this Appendix.

4.2 Features of Master Plans

Key features of a Master Plan include:

- addresses the key principles of successful environmental planning (see Section A.1.1)
- follows at least the first two phases of the MCEA and can also cover other phases
- allows for an integrated process with other planning initiatives
- provides a strategic level assessment of various options to better address overall system needs and potential impacts and mitigation
- is generally long term
- takes a system wide approach to planning which relates infrastructure either geographically or by a particular function
- recommends an infrastructure master plan which can be implemented through the implementation of separate projects
- includes a description of the specific projects (including anticipated project schedule)
- all notices clearly identify the approach being followed

Examples of Master Plans include wastewater and water servicing plans for an entire, or major portions of a municipality; wastewater treatment plans and water supply plans for a community or municipality; watershed plans; transportation master plans; and, infrastructure master plans.

4.3 Section 16 Order Requests

The provisions of section 16 under the EAA apply to projects that are being planned pursuant to a master planning process. Refer to section A.2.8 for details.

4.4 Approval of Master Plans

A Master Plan would typically be subject to approval by the municipality. A Master Plan does not require approval under the EAA. However, any specific projects within a Master Plan must fulfill all appropriate Class EA requirements. Requests for an order to comply with section 16 of the EAA would be possible only for those projects identified in the Master Plan which are subject to the MCEA and not the Master Plan itself.

4.5 Master Planning Process

The master planning process is discussed in Section A.2.7. A summary of the various approaches is provided below.

	Approach 1	Approach 2*	Approach 3*
Level of Detail	Broad (project specific information if minimal) Used as support for subsequent Schedule B and C project specific studies	Sufficient to fulfil requirements for Schedule B projects (more detailed project specific information is included) Used as support for subsequent Phase 3 and 4 schedule C project specific studies	Sufficient to fulfil requirements for Schedule B and C projects (more detailed project specific information is included)
Process	Preliminary Phase 1 and 2	Phase 1 and 2	Phase 1 to 4
Final Notice	Notice of Master Plan *This should not be called a Notice of Completion	Final notice becomes Notice of Completion for schedule B projects	Final notice becomes Notice of Completion for schedule B and C projects
Integration with Planning Act*	***Official Plan and Secondary Plan**	***Official Plan and Secondary Plan, Plan of Subdivision, etc.**	***Official Plan, Secondary Plan, Plan of Subdivision, etc.**

* The various master planning approaches provide proponents with flexibility to customize their master plans to suit their needs. See section A.2.7 for information on modified approaches 2 and 3.

4.6 Master Plan Reviews and Updates

Master Plans are long term plans that will likely be implemented over many years. Accordingly, before a proponent can proceed with one of the identified projects in the Master Plan, the proponent must complete the applicable MCEA process with complete and current information.

Depending on the scope and level of analysis of the Master Plan, the requirements of Phases 1 and 2 may have been satisfied at the project specific level. Alternatively, Phases 1 and 2 may have to be revisited as they relate to specific projects. In addition, for Schedule B projects, it would be necessary to fulfil the consultation and documentation requirements.

For Schedule C projects, it would be necessary to fulfil the additional requirements of Phases 3 and 4 and consider the site-specific issues which were beyond the scope of the master planning process. If the Master Plan is dated (i.e. older than ten years) and does not include complete and current information, the proponent may need to re-visit the information in the Master Plan as part of the project specific investigations prior to issuing the Notice of Completion for the Schedule B or C project.

For those projects where a Notice of Completion has been issued, the lapse of time provision applies.

It is recommended that proponents review and update their Master Plans on a regular basis. The proponent should include within the Master Plan, regardless of the approach followed, a process which clearly states when and how the Master Plan will be reviewed. Regular updates will permit the proponent to simply reference the complete and current information in the Master Plan when completing the MCEA process for a project.

For example, the Master Plan could be reviewed every five years to determine the need for a detailed formal review and/or updating. Potential changes which may trigger the need for a detailed review include:

- major changes to original assumptions;
- major changes to components of the Master Plan;
- significant new environmental effects; and
- major changes in proposed timing of projects within the Master Plan.

Appendix 5: Public Consultation

5.1 Consultation Plan

Section A.3 of Part A identifies the mandatory requirements for public notification and consultation. This, however, is the minimum. Proponents must develop an approach to consultation which incorporates the minimum mandatory requirements while reflecting the needs of the specific project, the community in which it is located, potentially affected and interested stakeholders and Indigenous Communities.

Accordingly, at the outset of the study, the proponent should develop a consultation plan identifying:

- who is to be consulted
- what they will be consulted about
- where they will be contacted in the process
- how they will be consulted, i.e. what methods will be used
- how input will be integrated in the study and decision-making
- the manner in which comments and concerns will be responded to
- how the plan will be monitored to determine its effectiveness

When developing a consultation plan, the main considerations are:

- the scope of the problem or opportunity being addressed
- the level of complexity and sensitivity
- potential environmental issues and impacts
- specific community characteristics and needs
- available resources
- approaches used on other similar studies in the community
- appropriate methods for the specific project
- ensuring that Indigenous Communities are appropriately consulted

It is strongly recommended that the Consultation Plan be prepared as a formal document. Be sure the methods for contacting the public are consistent with the Notice Requirements particularly if your municipality has developed its own unique minimum notice requirements (see A.3.5.3 Public Notices).

5.2 Methods of Public Consultation

There are numerous methods for contacting and consulting with the public including the following:

Purpose	Methods
Notification	• notices in newspapers • notices mailed and/or emailed to persons directly affected (mandatory) • notices posted in community facilities • notices sent to resident associations, specified interest groups, etc. • radio / TV announcements • notices posted at the site of the project • notices posted on the municipality's website/project website
Provision of Study Information	• information package distributed by mail or made available at a community facility or municipal office • newsletter • display panels in a community facility • website
Information Collection / Exchange	• public information centre; public open house; public consultation centre; public involvement centre (in person or virtual) • workshops for the public, specific interest or community groups and/or for representatives of different groups • small group meeting • meeting on a one-to-one basis • "kitchen table" meeting • field trip / site visit • comment sheets, surveys or questionnaires • telephone calls • personal visits • creation of a public liaison committee • representation on the Study Team

For a more detailed description of consultation methods and techniques, please refer to the most current consultation guide prepared by the Ministry of the Environment, Conservation and Parks. See section A.1.7.

Most projects will likely require a combination of methods. When determining the appropriate methods to use, the following should be considered:

- potential audience size
- level of involvement - i.e. potential for information exchange and input
- degree of information exchange that can be expected
- potential to identify issues
- potential to resolve contentious or outstanding issues
- special needs of the participants

5.3 Information about the Municipal Class Environmental Assessment

It is the responsibility of the proponent to explain the MCEA process including the ability to request a section 16 order, to any interested persons or Indigenous Communities. Proponents should make a copy of the MCEA available for review to those who request it and have a copy available at public locations when the study is being discussed. It is also desirable to make available to members of the public, a summary of the main points related to the MCEA. A sample public handout about the MCEA is provided. It was prepared for a hypothetical project in a hypothetical municipality.
When referring to a specific project, it is desirable to identify where the project is in terms of the Class EA process.

5.4 Resolution of Conflicts and Disputes

The MCEA identifies the need for consultation early in and throughout the process and the need for those with concerns to discuss them with the proponent.

There may be projects, however, where issues cannot be resolved and so conflict resolution techniques may be appropriate. The main types of conflict resolution are:

Facilitation
Facilitation involves a third party to assist in the discussion of issues and concerns among the participants and assist them in arriving at mutually agreeable solutions. Facilitation refers to a flexible approach that encourages the open exchange of ideas and opinions. Facilitation is an art - it requires listening carefully to hear what a person is really saying, ensuring others are receptive to what is being said, and encouraging all sides to work co-operatively in developing solutions. In some cases, facilitation may result in a consensus - when an agreement is reached to the satisfaction of everyone. In other cases, facilitation may at least result in a narrowed list of issues that remain to be resolved.

Negotiation
Negotiation is possible when all sides - the proponent and the parties - want resolution of the outstanding issues and are willing to engage in negotiations. An outside person is not always necessary but may be helpful in assisting the proponent and interested parties to form their own positions and responses to what the other proposes.

Negotiations often require those in dispute to consider trade-offs and compromise. Effective negotiation results in proponents and interested parties arriving at mutually agreeable solutions.

Mediation
Mediation may be required when the proponent and participants have reached the point where no further discussion is possible without the intervention of a neutral third party. Mediation is a voluntary, more formalized conflict resolution process, and may include the mediator meeting with each side separately to identify what the problems are and then create a new process to resume discussions. Disputes requiring mediation are

often emotionally charged and require skillful handling by an experienced professional. The mediator has no authority to impose a settlement. The desired outcome of mediation includes an improved relationship between the proponent and parties, together with solutions that are mutually acceptable.

Arbitration
Arbitration is a technique involving a neutral third-party acceptable to all sides, who is retained to hear the positions of those in dispute and then issue a decision that resolves the conflict or dispute. The decision of the arbitrator is binding on all parties. Arbitration is a formal conflict resolution process and is used only when the proponent and interested parties cannot arrive jointly at an acceptable resolution. However, any decision of the arbitrator must respect the requirements of the EAA.

For additional information refer to MECP's Code of Practice: Using Mediation in the Environmental Assessment Process.

5.5 Sample Public Handout

The Town of North Falls is undertaking the study of Patricia Avenue and is planning this project through the Schedule 'C' (Municipal Road Projects) process in accordance with the requirements of the Municipal Class Environmental Assessment.

The purpose of this handout is to provide an overview of the Municipal Class Environmental Assessment Process; and, to explain the role of the public in the process and opportunities to get involved.

Ontario's *Environmental Assessment Act*
The purpose of the *Environmental Assessment Act* (EAA) is "the betterment of the people of the whole or any part of Ontario by providing for the protection, conservation and wise management in Ontario of the environment". The EAA broadly defines "environment" to include natural, social, cultural, built and economic components.

Environment Assessment (EA) is a decision-making process to promote good environmental assessment planning. The key features are:

- Early consultation
- Consideration of a reasonable range of alternatives
- Assessment of environmental effects
- Systematic evaluation of alternatives
- Clear documentation and traceable decision making

There are generally two types of EAs that have been established by the EAA:

3. **Individual Environmental Assessments** – An individual EA or application consists of a terms of reference and an EA, submitted to the ministry for approval. Individual EAs are generally required for large-scale, complex projects with the potential for significant environmental effects.

4. **Streamlined EAs** – Streamlined EAs include Class EAs. Class EAs establish a process that proponents may follow for a class of projects, which if followed allows the proponent to proceed with the undertaking without requiring further approval.

MUNICIPAL CLASS ENVIRONMENTAL ASSESSMENT

The Municipal Class Environmental Assessment provides a streamlined EA process for municipal infrastructure projects, including roads, water, wastewater, and transit. Since projects being planned using the Municipal Class Environmental Assessment are broken up into different schedules, with different requirements applying to the different schedules.

Exempt Projects

Formerly known as Schedule A and A+ projects. these projects are exempt from the requirements of the EAA. They are generally limited in scale and have minimal adverse effects on the environment.

Eligible to be Screened to Exemption

These projects are eligible for exemption based on the results of a screening process. If as a result of the screening process the project is not exempt, the applicable schedule B or C assessment process must be completed. Proponents can also choose at the outset to not follow a screening process and just complete the applicable B or C process.

Schedule B

These projects have the potential for some adverse environmental effects. As part of the process, the proponent is required to consult and a Project File Report must be prepared and made available for review by the public, government agencies and Indigenous Communities.

Schedule C

These projects have the potential for more significant environmental effects than a Schedule B project and must proceed through the full planning and documentation process, including consultation. An Environmental Study Report must be prepared and made available for review by the public, government agencies and Indigenous Communities.

PUBLIC INVOLVEMENT

Members of the public with an interest in the project can participate in the Class EA process by providing background information, advising the proponent of their support and concerns, reviewing and providing comments and input about the study findings. For Schedule C projects there are three mandatory opportunities for public involvement as shown below. Government agencies and Indigenous Communities are also involved in reviewing projects.

You will have the opportunity to learn more about the project and consultation opportunities through public notices in newspapers, online on the project website and signs in the community. Consultation opportunities will include public information centres, community workshops and / or municipal council meetings. Members of the public with an interest in the study should ask to be placed on the study mailing list to receive notification of the consultation opportunities for a specific project.

To provide your comments or to be placed on the study mailing list, please contact the following:

Study Contact: Municipality / Proponent
Mailing Address
Phone
Fax
Email
Website

You may provide written comments to our project team by DATE. All comments and concerns should be sent directly to PROPONENT CONTACT at the COMPANY/MUNICIPALITY.

The proponent will work with the public, Indigenous Communities and government agencies to determine the preferred means of addressing a problem or opportunity. If a person has concerns, the concerns should be discussed directly with the proponent to see if they can be resolved.

A request for an order may be made to the Ministry of the Environment, Conservation and Parks under section 16 of the EAA, asking the Minister to impose conditions in addition to those in the Class EA or to require an individual EA on the grounds that the order may prevent, mitigate or remedy adverse impacts on constitutionally protected Aboriginal and treaty rights. Requests on other grounds will not be considered. Requests should include the requester contact information and full name.

Requests should specify what conditions, if any, the requestor is seeking or that an individual EA is being sought, how the requested order may prevent, mitigate or remedy potential adverse impacts on Aboriginal and treaty rights, and any other information in support of the request.

Additional information regarding this process may be obtained from the Town of North Falls.

Appendix 6: Sample Notices

6.1 Sample Notices for MCEA Projects

The following sample notices are provided:
Schedule B and C

A. 1st mandatory contact, Phase 2: Public comment invited or Notice of Study Commencement
B. 1st mandatory contact, Phase 2: Notice with Optional Public Consultation
C. 2nd mandatory contact, Phase 3: Notice of Public Consultation Centres
D. 3rd mandatory contact, Phase 4: Notice of Completion
E. Revisions and Addenda to ESR: Notice of Addendum

Please note that the notices describe hypothetical projects in a hypothetical municipality and are intended only as a guide. In addition, the format style, title or content may vary from municipality to municipality to suit specific circumstances and local requirements.

The following information must be included in all notices at a minimum:

- Date the notice was issued;
- Project name, description, purpose;
- Proponent name;
- Proponent contact information (address, phone, email);
- Name of the Class EA (e.g. the Municipal Class Environmental Assessment);
- Schedule of Class EA being followed (B, C);
- Map of where the project is located (where applicable);
- Where documents are located for viewing or information (where applicable);
- Timeframe for the public comment period (must be a minimum of 30 days)(where applicable);
- Meeting locations (where applicable);
- Project website address (where applicable);
- Freedom of Information and Protection of Privacy (FIPPA) disclaimer;
- Ability to request a Section 16 Order on the grounds that the requested order may prevent, mitigate or remedy adverse impacts on constitutionally protected Aboriginal and treaty; and
- Information on who/where the Section 16 Order request must be sent to including Minister of the Environment, Conservation and Parks, Environmental Assessment Branch (EAB) Director, and proponent contact

All notices should be written in language that is easy to understand and must be submitted to the ministry as outlined in Section A.1.5.1.

SAMPLE NOTICE A: NOTICE OF STUDY COMMENCEMENT

MUNICIPAL CLASS ENVIRONMENTAL ASSESSMENT – EXPAND CAPACITY OF SOUTH FALLS WATER TREATMENT PLANT

The Town of South Falls is growing rapidly and the new growth requires access to municipal water. The Town of South Falls will study and then identify and consider options to expand the capacity of the existing water treatment plant on John St. Additional property may be required to accommodate a project to expand the water treatment plant.

INSERT MAP

The project is being planned following the **Schedule C** process in the **Municipal Class Environmental Assessment** 2023. For further information on the project, or on the planning process being followed consult www.southfalls.ca/expandcapacitywtp or contact:

Town of South Falls - Paul Smith, P.Eng. Project Manager 175 Bridge Street South Falls, ON, K7C 2V8 Tel: 613-257-6207 E-mail: psmith@southfalls.ca

ABC Associates Limited - Andrew Black, Address, Phone, ablack@consultant.com
Public, Indigenous Community and stakeholder input and comment are invited, for incorporation into the planning and design of this project and will be received until June 10, 2022. Subject to the identification of a preferred plan to expand the capacity of the water treatment plant, and the receipt of necessary approvals, the Town of South Falls intends to proceed with this project in the next five years.

This Notice is issued April 26, 2022.

[Placeholder for proponents to insert notice of collection text, as required under any protection of privacy legislation (e.g. FIPPA, MFIPPA, as required).]

SAMPLE NOTICE B: NOTICE OF STUDY COMMENCEMENT WITH OPTIONAL PUBLIC CONSULTATION CENTRE

MUNICIPAL CLASS ENVIRONMENTAL ASSESSMENT FOR
REPLACEMENT OF THE CENTRAL BRIDGE

Bridge Street is the major arterial road in downtown South Falls and is the central link across the River. The traffic volumes are impeding traffic flow, particularly for through traffic, and business operations in the downtown.

The Town of South Falls needs to identify and then consider options to improve traffic congestion on Bridge St. These options could potentially include widening Bridge St to four lanes or constructing a new parallel arterial road on to which some traffic could be diverted.
INSERT MAP OF PROJECT LOCATION

The project is being planned following the **Schedule C** process in the **Municipal Class Environmental Assessment** 2023. As such, extensive public and technical agency consultation will play a key role in developing the study recommendations. At this time, it is anticipated that three (3) Public Consultation Centres (PCC) will be held during the study.
The first PCC will be held to present preliminary information on the project and to receive input from the public on the key issues and constraints within the study area. The PCC will be held as an informal "Open House" format with materials pertaining to the study on display and members of the project team on hand to answer questions and discuss issues related to the project.

Public Consultation Centre #1:
Date: Wednesday May 16, 2018
Time: 4:00 to 7:30 pm
Location: South Falls Canoe Club, 179 John St.

If you would like more information prior to the first public consultation centre, or to be included on the mailing list for this project, please contact one of the following members of the Project Team:

Town of South Falls - Paul Smith, P.Eng. Project Manager 175 Bridge Street South Falls, ON, K7C 2V8 Tel: 613-257-6207 E-mail: psmith@southfalls.ca
ABC Associates Limited - Andrew Black, Address, Phone, ablack@consultant.com

This Notice is issued April 26, 2018
[Placeholder for proponents to insert notice of collection text, as required under any protection of privacy legislation (e.g. FIPPA, MFIPPA, as required).]

SAMPLE NOTICE C1: NOTICE OF 1ST PUBLIC CONSULTATION CENTRE

MUNICIPAL CLASS ENVIRONMENTAL ASSESSMENT
TRAFFIC CONGESTION ON BRIDGE ST.

Bridge Street is the major arterial road in downtown South Falls and is the central link across the River. The traffic volumes are impeding traffic flow, particularly for through traffic and business operations in the downtown.

The Town of South Falls is considering options to improve traffic congestion on Bridge St. including widening Bridge St. to four lanes or constructing a new parallel arterial road on to which some traffic could be diverted.

INSERT MAP OF PROJECT LOCATION

The project is being planned through the **Schedule C** process in the **Municipal Class Environmental Assessment** (2023). As such extensive public and technical agency consultation will play a key role in developing the study recommendations.
This first PCC is being scheduled to present general alternatives being considered to improve traffic congestion on Bridge St. The PCC will be held as an informal "Open House" with materials pertaining to the study on display and members of the project team on hand to answer questions and discuss issues related to the project.

Public Consultation Centre #1
Date: Wednesday, June 27, 2018
Time: 4:00 p.m. – 7:30 p.m.
Location: Town Hall – Auditorium (175 Bridge Street, South Falls, ON)

If you would like more information prior to the public consultation centre or to be added to the study mailing list, please contact one of the following members of the Project Team.

Town of South Falls – Paul Smith, P.Eng. Project Manager, 175 Bridge St. South Falls, ON
K7C 2V8 – Tel xxx-xxx-xxxx, E-mail : psmith@southfalls.ca

ABC Associated Limited – Andrew Black, Address, Phone; Email:
ablack@cousultant.com

This Notice is issued July 14, 2018

[Placeholder for proponents to insert notice of collection text, as required under any protection of privacy legislation (e.g. FIPPA, MFIPPA, as required).]

SAMPLE NOTICE C2: NOTICE OF 2ND PUBLIC CONSULTATION CENTRE

MUNICIPAL CLASS ENVIRONMENTAL ASSESSMENT
TRAFFIC CONGESTION ON BRIDGE ST.

Bridge Street in downtown South Falls is congested and through traffic flow must be improved on this important arterial road. To address this congestion, the Town of South Falls is considering options for locating a new parallel arterial road on to which some traffic could be diverted.

The project is being planned through the Schedule C process in the Municipal Class Environmental Assessment (2023). As such, extensive public and technical agency consultation will play a key role in developing the study recommendations. Preliminary project information and planning alternatives were presented at the 1st Public Consultation Centres.

INSERT MAP OF PROJECT

A 2nd Public Consultation Centre (PCC) is being scheduled to present alternative design concepts for the preferred solution to construct a new arterial road.
The PCC will be held as an informal "Open House" with materials pertaining to the study on display, and members of the project team on hand to answer questions and discuss issues related to the project.

Public Consultation Centre #2
Date: Monday November 19, 2018
Time: 4:00 pm to 7:30 pm
Location: Town Hall – Auditorium (175 Bridge Street, South Falls, ON)

If you would like more information prior to the public consultation centre or to be added to the study mailing list, please contact one of the following members of the Project Team:
Town of South Falls - Paul Smith, P.Eng. Project Manager 175 Bridge Street South Falls, ON, K7C 2V8 Tel: 613-257-6207 E-mail: psmith@southfalls.ca

ABC Associates Limited - Andrew Black, Address, Phone, ablack@consultant.com
This Notice first issued November 8, 2018.

[Placeholder for proponents to insert notice of collection text, as required under any protection of privacy legislation (e.g. FIPPA, MFIPPA, as required).]

SAMPLE NOTICE D1: NOTICE OF COMPLETION

MUNICIPAL CLASS ENVIRONMENTAL ASSESSMENT
TRAFFIC CONGESTION ON BRIDGE STREET

The Town of South Falls has completed the Class Environmental Assessment to address traffic congestion on Bridge St in the Downtown. The recommended solution is to construct a new arterial road to the east that parallels Bridge St and provides an alternative route on to which traffic will be diverted.

INSERT MAP OF PROJECT LOCATION

The Town has planned this project through the Schedule "C" process of the Municipal Class Environmental Assessment (2023). As such, public and technical agency consultation played a key role in developing the study recommendations.

An Environmental Study Report (ESR) documenting the planning process undertaken, details of the study recommendations as well as potential impacts and mitigation measures, has been completed and is being made available for public review. Subject to comments received following this Notice and the receipt of approvals, the Town intends to proceed with construction of the recommended project as outlined in the ESR.

The ESR is available for review on the Town's website (www.southfalls.ca) and at the South Falls Town Hall (175 Bridge Street) during regular hours of operation Monday to Friday. Further information may be obtained from one of the following members of the project team:
Town of South Falls - Paul Smith, P.Eng. Project Manager 175 Bridge Street South Falls, ON, K7C 2V8 Tel: 613-257-6207 E-mail: psmith@southfalls.ca

ABC Associates Limited - Andrew Black, Address, Phone, ablack@consultant.com
Interested persons may provide written comments to our project team by **[date]**. All comments and concerns should be sent directly to the Town of South Falls at the **[address]**.

In addition, a request to the Minister of the Environment, Conservation and Parks for an order imposing additional conditions or requiring an individual environmental assessment may be made on the grounds that the requested order may prevent, mitigate or remedy adverse impacts on constitutionally protected Aboriginal and treaty rights. Requests should include your full name and contact information.

Requests should specify what kind of order is being requested (additional conditions or a an individual environmental assessment), explain how an order may prevent, mitigate or remedy potential adverse impacts, and can include any supporting information.

The request should be sent to:

Minister of the Environment, Conservation and Parks
Ministry of Environment, Conservation and Parks
777 Bay Street, 5th Floor
Toronto ON M7A 2J3
minister.mecp@ontario.ca

and
Director, Environmental Assessment Branch
Ministry of Environment, Conservation and Parks
135 St. Clair Ave. W, 1st Floor
Toronto ON, M4V 1P5
EABDirector@ontario.ca

Requests should also be sent to the Town of South Falls by mail or e-mail. Please visit the ministry's website for more information on requests for orders under section 16 of the Environmental Assessment Act at: https://www.ontario.ca/page/class-environmental-assessments-part-ii-order

All personal information included in your request – such as name, address, telephone number and property location – is collected, under the authority of section 30 of the Environmental Assessment Act and is collected and maintained for the purpose of creating a record that is available to the general public. As this information is collected for the purpose of a public record, the protection of personal information provided in the Freedom of Information and Protection of Privacy Act (FIPPA) does not apply (s.37). Personal information you submit will become part of a public record that is available to the general public unless you request that your personal information remain confidential.

[Placeholder for proponents to insert notice of collection text, as required under any protection of privacy legislation (e.g. FIPPA, MFIPPA, as required).]

This Notice is issued on **[date]**.

SAMPLE NOTICE D2: NOTICE OF COMPLETION

MUNICIPAL CLASS ENVIRONMENTAL ASSESSMENT – EXPAND CAPACITY OF SOUTH FALLS WATER TREATMENT PLANT

The Town of South Falls is growing rapidly and the new growth requires access to municipal water. The Town of South Falls has studied alternatives and determined that the capacity of the water treatment plant should be expanded by installing another treatment filter, installing an addition high lift pump and expanding the size of the clear well for water storage. To minimize the visual impact of this project, the clear well water storage tank will be underground. Additional property for this project will be acquired prior to construction. The estimated cost of $2.5m will be funded entirely from development charges.

INSERT MAP OF PROJECT LOCATION
The Town has planned this project through the Schedule B process in the Municipal Class Environmental Assessment 2023. As such, public and technical agency input played a key role in developing the study recommendations.

A Project File Report documenting the planning process undertaken, details of the study recommendations as well as potential impacts and mitigation measures, has been completed and is being made available for public review. Subject to comments received following this Notice and the receipt of approvals, the Town intends to proceed with construction of the recommended project, as outlined in the Project File Report.

The Project File Report is available for review on the Town's website (www.southfalls.ca) and at the South Falls Town Hall (175 Bridge Street) during regular hours of operation Monday to Friday. Further information may be obtained from one of the following members of the project team:

Town of South Falls - Paul Smith, P.Eng. Project Manager 175 Bridge Street South Falls, ON, K7C 2V8 Tel: 613-257-6207 E-mail: psmith@southfalls.ca

ABC Associates Limited - Andrew Black, Address, Phone, ablack@consultant.com
Interested persons may provide written comments to our project team by [date]. All comments and concerns should be sent directly to the Town of South Falls at the [address].
In addition, a request to the Minister of the Environment, Conservation and Parks for an order imposing additional conditions or requiring an individual environmental assessment may be made on the grounds that the requested order may prevent, mitigate or remedy adverse impacts on constitutionally protected Aboriginal and treaty rights. Requests should include your full name and contact information.

Requests should specify what kind of order is being requested (additional conditions or an individual environmental assessment), explain how an order may prevent, mitigate or remedy potential adverse impacts, and can include any supporting information.

The request should be sent in writing or by email to:

Minister of the Environment, Conservation and Parks
Ministry of Environment, Conservation and Parks
777 Bay Street, 5th Floor
Toronto ON M7A 2J3
minister.mecp@ontario.ca

and

Director, Environmental Assessment Branch
Ministry of Environment, Conservation and Parks
135 St. Clair Ave. W, 1st Floor
Toronto ON, M4V 1P5
EABDirector@ontario.ca

Requests should also be sent to the Town of South Falls by mail or e-mail.
Please visit the ministry's website for more information on requests for orders under section 16 of the *Environmental Assessment Act* at: https://www.ontario.ca/page/class-environmental-assessments-part-ii-order

All personal information included in your request – such as name, address, telephone number and property location – is collected, under the authority of section 30 of the *Environmental Assessment Act* and is collected and maintained for the purpose of creating a record that is available to the general public. As this information is collected for the purpose of a public record, the protection of personal information provided in the *Freedom of Information and Protection of Privacy Act* (FIPPA) does not apply (s.37). Personal information you submit will become part of a public record that is available to the general public unless you request that your personal information remain confidential.

[Placeholder for proponents to insert notice of collection text, as required under any protection of privacy legislation (e.g. FIPPA, MFIPPA, as required).]

This Notice is issued **[date]**.

SAMPLE NOTICE E: NOTICE OF ADDENDUM

TOWNSHIP OF DARTFORD
MUNICIPAL CLASS ENVIRONMENTAL ASSESSMENT
WATER SUPPLY AUGMENTATION
FIRST CONCESSION RECHARGE SYSTEM
NOTICE OF ADDENDUM

Construction of the First Concession Recharge System commenced in the summer of 2019. The York River Pumping Station and the trunk watermains were completed in late September. Due to unexpected soil conditions at the southerly end of Dartford Hill however, construction of the lagoons and infiltration trenches was halted to allow a review of the design to be undertaken.

An addendum has now been completed to the Environmental Study Report issued June 1, 2019. The project was planned through the Schedule C Municipal Class Environmental Assessment process. The Addendum contains details of the revised recharge system and the amended construction schedule. The Township is seeking comments on the proposed changes as outlined in the Addendum.

The Addendum is available for public, government agency and Indigenous Community review in accordance with the requirements of the Municipal Class Environmental Assessment. Subject to comments received following this Notice, the Township intends to proceed with the construction of this project in the summer of 2021. The estimated cost is $725,000.

The addendum is available for review at www.dartford.ca and at the following location(s):

Township Office, Township of Dartford, Township Road 20, Dartford, ON.	Resource Centre, YM-YWCA, 3rd Floor, 123 First Avenue, Dartford, ON.
Mon-Fri: 8:30 a.m. - 4:30 p.m. Telephone: (519) 765-4321	Mon-Sat: 9:00 a.m. - 9:00 p.m. Telephone: (519) 456-7123

Further information may be obtained from the Township's consultants, ABC Engineering Limited, 100 Main Street, Huntington, ON K0L 1C0. Telephone (519) 123-4567. Attention Ms. Julie Appleby, Chief Hydrogeologist jappleby@ABC.com

Interested persons may provide written comments to our project team by **[date]**. All comments and concerns should be sent directly to the Town of South Falls at the **[address]**.

In addition, a request to the Minister of the Environment, Conservation and Parks for an order imposing additional conditions or requiring an individual environmental assessment may be made on the grounds that the requested order may prevent,

mitigate or remedy adverse impacts on constitutionally protected Aboriginal and treaty rights. Requests should include your full name and contact information.

Requests should specify what kind of order is being requested (additional conditions or an individual environmental assessment), explain how an order may prevent, mitigate or remedy potential adverse impacts, and can include any supporting information.
The request should be sent in hardcopy or by email to:

Minister of the Environment, Conservation and Parks
Ministry of Environment, Conservation and Parks
777 Bay Street, 5th Floor
Toronto ON M7A 2J3
minister.mecp@ontario.ca

and

Director, Environmental Assessment Branch
Ministry of Environment, Conservation and Parks
135 St. Clair Ave. W, 1st Floor
Toronto ON, M4V 1P5
EABDirector@ontario.ca

Requests should also be sent to the Town of South Falls by mail or by e-mail.
Please visit the ministry's website for more information on requests for orders under section 16 of the *Environmental Assessment Act* at: https://www.ontario.ca/page/class-environmental-assessments-part-ii-order

All personal information included in your request – such as name, address, telephone number and property location – is collected, under the authority of section 30 of the *Environmental Assessment Act* and is collected and maintained for the purpose of creating a record that is available to the general public. As this information is collected for the purpose of a public record, the protection of personal information provided in the *Freedom of Information and Protection of Privacy Act* (FIPPA) does not apply (s.37). Personal information you submit will become part of a public record that is available to the general public unless you request that your personal information remain confidential.

[Placeholder for proponents to insert notice of collection text, as required under any protection of privacy legislation (e.g. FIPPA, MFIPPA, as required).]

This Notice is issued **[date]**.
Reeve John McKay
Township of Dartford Hill
R.R. #1, Dartford, ON

6.2 Sample Notices for Master Plans

Given the broad scope of Master Plans, the different approaches and the potential diversity of their implementation, notices may vary and therefore the following sample notices are provided to information purposes only:

A. Notice of Commencement and Public Consultation Centre #1 for Approach #1

    1. Note to Users: In some cases these could be separate notices, i.e. a notice of study commencement followed at a later date by a notice of the first public consultation centre.

B. Notice of Public Consultation Centre #2 for Approach #1

C. Notice of Study Completion for Approach #1

D. Notice of Study Completion for Approach #2

E. Notice of Study Completion for Approach #3

Regardless of the approach, proponents must ensure that the minimum mandatory notification requirements outlined in this Class EA are met.

MASTER PLAN SAMPLE NOTICE A: NOTICE OF STUDY COMMENCEMENT AND PUBLIC CONSULTATION CENTRE #1

NORTH FALLS MASTER PLAN
NOTICE OF STUDY COMMENCEMENT AND PUBLIC CONSULTATION CENTRE #1*

THE STUDY

The Town of North Falls is carrying out a study to determine infrastructure requirements for the Town to service the proposed doubling of our population. This study is being conducted in accordance with the requirements of Phases 1 and 2 of the Municipal Class Environmental Assessment which. The Master Plan is following **Approach #1.**

The Master Plan will have a broad scope and level of assessment. The analysis will be on a regional or systems scale to identify infrastructure needs and establish broader alternatives and solutions. The Master Plan will form the basis for future, more detailed investigations for projects that are subject to the *Environmental Assessment Act*.

WE WANT TO HEAR FROM YOU

Public consultation is a key component of this study. The proposed consultation plan provides for public consultation centres at two points in the study: Spring 2020 - to review the problem; and, Fall 2020 - to review alternative solutions. In addition there will be an opportunity to review the final Master Plan report.

The study area is as shown on the attached key plan. The first public consultation centre has been arranged to review and receive input from the public about the collection of background information and identification of the problem:

Date
Time
Location

STUDY CONTACTS

All those with an interest in the study are urged to attend. If you have any questions or wish to be added to the study mailing list, please contact:

Project Manager phone
Address fax
e-mail
or visit our website at
www.northfalls.com

[Placeholder for proponents to insert notice of collection text, as required under any protection of privacy legislation (e.g. FIPPA, MFIPPA, as required).]

This Notice is issued **[date]**.

MASTER PLAN SAMPLE NOTICE B: NORTH FALLS MASTER PLAN NOTICE OF PUBLIC CONSULTATION CENTRE #2

STUDY STATUS
The Town of North Falls is carrying out a study to determine infrastructure requirements for the Town to service proposed future development. The Master Plan is being prepared in accordance with **Approach #1** of the Municipal Class Environmental Assessment (2023). The study area is as shown on the attached key plan. Based on the study findings to date and comments received from technical agencies and the public, a series of alternative solutions have been developed to address proposed transportation, water and wastewater requirements.

SECOND PUBLIC CONSULTATION CENTRE
The first public consultation centre was held on May 1, 2020 to introduce the study. As a result of comments received from the public and interested persons, additional investigations were conducted regarding heritage resources in the study area. Thereafter, alternative solutions were developed and assessed in terms of their environmental effects.

A second public consultation centre has been arranged to review and receive input from the public about the alternative solutions, and the preliminary identification of a preferred master plan solution:

Date:
Time:
Place:

STUDY CONTACTS
All those with an interest in the study are urged to attend. If you have any questions or wish to be added to the study mailing list, please contact:

Project Manager phone
Address fax
e-mail
or visit our website at
www.northfalls.com

[Placeholder for proponents to insert notice of collection text, as required under any protection of privacy legislation (e.g. FIPPA, MFIPPA, as required).]

This Notice issued **[date]**.

MASTER PLAN SAMPLE NOTICE C: NORTH FALLS MASTER PLAN NOTICE OF MASTER PLAN

RECOMMENDED MASTER PLAN
The Town of North Falls has prepared a Master Plan following Phases 1 and 2 of the Municipal Class Environmental Assessment process. The Master Plan is following **Approach #1**. The study area is as shown on the attached key plan.

Based on the study findings and input from technical agencies and the public, the recommended Master Plan is as shown on the attached key plan. The Master Plan identifies the recommended infrastructure to service the future growth of the Town while minimizing environmental impacts. The recommended Master Plan incorporates the comments received from the public and agencies during the study. The main components are listed below. While the Master Plan addresses need and justification at a broad level, more detailed studies for each of the projects included in the Master Plan will be done later following the Municipal Class Environmental Assessment.

TYPE OF PROJECT

SCHEDULE B PROJECTS	**STATUS**
• water • wastewater • roads	• While the Master Plan generally addresses Phases 1 and 2 of the Municipal Class Environmental Assessment, additional investigations will be carried out at a later date and published in a Project File Report.
SCHEDULE C PROJECTS	
• water • wastewater • roads	• Master Plan generally addresses Phases 1 and 2 of the Municipal Class Environmental Assessment • Additional investigations will be carried out at a later date for the remaining components of Phase 1 and 2 as well as Phases 3 and 4 will be completed for each project at a later date and documented in an Environmental Study Report

INDIVIDUAL EA PROJECTS
• new municipal expressway

The Master Plan is available for review at the following locations:
Municipal Office Local Library or on the town website at www.northfalls.com/masterplan

Please forward any comments to the Study Contact by <date>. Thereafter, the Master Plan will be reviewed and revised taking into consideration the comments that are received from the public. The recommended Master Plan will be presented to Town Council for approval.
Project Manager
Address
Phone
E-mail

[Placeholder for proponents to insert notice of collection text, as required under any protection of privacy legislation (e.g. FIPPA, MFIPPA, as required).]

This Notice is issued **[date]**.

SAMPLE NOTICE D: NORTH FALLS MASTER PLAN NOTICE OF COMPLETION

RECOMMENDED MASTER PLAN
The Town of North Falls has prepared a Master Plan that fulfills Phases 1 and 2 of the Municipal Class Environmental Assessment 2023. The Master Plan is following **Approach #2.** The study area and identified project locations are as shown on the attached key plan.

The Master Plan has been completed with a level of detail sufficient to fulfil the requirements for projects classified as Schedule B in the Municipal Class Environmental Assessment; however more detailed studies for each of the projects in the Master Plan classified as Schedule C will be done at a later date.

Based on the study findings and input from technical agencies and the public, the recommended Master Plan is as shown on the attached key plan. The Master Plan identifies the recommended infrastructure to service the future growth of the Town while minimizing environmental impacts. The recommended Master Plan incorporates the comments received from the public and agencies during the course of the study.

The following Schedule B projects are identified as completing the Municipal Class Environmental Assessment process through the Master Plan.

- Project #1
- Project #2
- Project #3

Interested persons may provide written comments to our project team by **[date].** All comments and concerns should be sent directly to the Town of North Falls at the **[address].**

In addition, a request to the Minister of the Environment, Conservation and Parks for an order imposing additional conditions or requiring an individual environmental assessment may be made on the grounds that the requested order may prevent, mitigate or remedy adverse impacts on constitutionally protected Aboriginal and treaty rights. Requests should include your full name and contact information.

Requests should specify what kind of order is being requested for what project(s)(additional conditions or an individual environmental assessment), explain how an order may prevent, mitigate or remedy potential adverse impacts, and can include any supporting information.

The request should be sent by mail or by email to:
Minister of the Environment, Conservation and Parks
Ministry of Environment, Conservation and Parks

777 Bay Street, 5th Floor
Toronto ON M7A 2J3
minister.mecp@ontario.ca

and

Director, Environmental Assessment Branch
Ministry of Environment, Conservation and Parks
135 St. Clair Ave. W, 1st Floor
Toronto ON, M4V 1P5
EABDirector@ontario.ca

Requests should also be sent to the Town of South Falls by mail or by e-mail. Please visit the ministry's website for more information on requests for orders under section 16 of the Environmental Assessment Act at: https://www.ontario.ca/page/class-environmental-assessments-part-ii-order
The Master Plan is available for review at the following locations:

Municipal Office, Local Library or on the town website at 222.northfalls.com/masterplan

[Placeholder for proponents to insert notice of collection text, as required under any protection of privacy legislation (e.g. FIPPA, MFIPPA, as required).]

This Notice is issued **[date]**.

SAMPLE NOTICE E: NORTH FALLS MASTER PLAN NOTICE OF COMPLETION

RECOMMENDED MASTER PLAN

The Town of North Falls has prepared a Master Plan that fulfills the requirements of the Municipal Class Environmental Assessment. The Master Plan is following **Approach #3.** The study area and identified project locations are as shown on the attached key plan.

Based on the study findings and input from technical agencies and the public, the recommended Master Plan is as shown on the attached key plan. The Master Plan identifies the recommended infrastructure to service the future growth of the Town while minimizing environmental impacts. The recommended Master Plan incorporates the comments received during the study. The Master Plan has been completed at a level of detail sufficient to fulfil the requirements the projects included in the Master Plan that are classified as Schedule B and C in the Municipal Class Environmental Assessment.

The following Schedule B and C projects are identified as completing the Municipal Class Environmental Assessment process through the Master Plan.

Project #1 – Schedule B	Project #4 – Schedule C
Project #2 – Schedule B	Project #5 – Schedule C
Project #3 – Schedule B	Project #6 – Schedule C

Interested persons may provide written comments to our project team by **[date]**. All comments and concerns should be sent directly to the Town of South Falls at the **[address]**.

In addition, a request to the Minister of the Environment, Conservation and Parks for an order imposing additional conditions or requiring an individual environmental assessment may be made on the grounds that the requested order may prevent, mitigate or remedy adverse impacts on constitutionally protected Aboriginal and treaty rights. Requests should include your full name and contact information.

Requests should specify what kind of order is being requested for what project(s) (additional conditions or an individual environmental assessment), explain how an order may prevent, mitigate or remedy potential adverse impacts, and can include any supporting information.

The request should be sent by mail or email to:
Minister of the Environment, Conservation and Parks
Ministry of Environment, Conservation and Parks
777 Bay Street, 5th Floor
Toronto ON M7A 2J3
minister.mecp@ontario.ca

and

Director, Environmental Assessment Branch
Ministry of Environment, Conservation and Parks
135 St. Clair Ave. W, 1st Floor
Toronto ON, M4V 1P5
EABDirector@ontario.ca

Requests should also be copied to the Town of South Falls by mail or by e-mail. Please visit the ministry's website for more information on requests for orders under section 16 of the Environmental Assessment Act at: https://www.ontario.ca/page/class-environmental-assessments-part-ii-order

The Master Plan is available for review at the following locations:

Municipal Office, Local Library or on the town website at 222.northfalls.com/masterplan

This notice was issued on (insert date)

[Placeholder for proponents to insert notice of collection text, as required under any protection of privacy legislation (e.g. FIPPA, MFIPPA, as required).]

Appendix 7: Integrated Approach

Consultation Guidance and Considerations for the MCEA and the *Planning Act*

Note: This chart highlights existing key notice and consultation information – users are responsible for all statutory and regulatory requirements.

MUNICIPAL CLASS ENVIRONMENTAL ASSESMENT	PLANNING ACT
Mandatory Notice/Consultation Requirements	
Mandatory public consultation is required at key decision points during the MCEA process. The method of consultation is discretionary (e.g. Open House, Public Meeting) Public notice requirements are described in A.3.5.3. Proponents are encouraged to establish their own custom policies for providing notice to the public.	Minimum of one statutory public meeting is required. Refer to the • *Planning Act* (see sections 17, 22, 28 or 51 for relevant instrument type), **and** • O.Reg. 543/06 (official plan/plan amendments and community improvement plans), **or** • O.Reg. 544/06 (plan of subdivision/condominium) • Official plan/plan amendments, community improvement plans Earliest day to hold a public meeting − **20 days** after the requirements for giving notice are met Plan of Subdivision/Condominium Latest time to hold a public meeting − **14 days** before a decision is made
Mandatory Notices and Consultation Notice of Commencement Notice of Completion Project File Report (Schedule B)	Mandatory Notices and Consultation Official plan/secondary plan, community improvement plans: - Plans to be publicly available and consulted on -Notice of statutory public meeting -Notice of decision and appeal rights to Ontario Land Tribunal (OLT)

MUNICIPAL CLASS ENVIRONMENTAL ASSESMENT	PLANNING ACT
Notice of Public Consultation Centre in Phase 3 (Schedule C) -Environmental Study Report (Schedule C) - Section 16 Order requests related to Indigenous community issues Discretionary Notices/consultation: -Notices for public meetings at key decision points -Review of draft documents	Official Plan Amendments/ Plans of Subdivision/ Condominium for specific projects: -sign on the site -circulation to property owners within 120 metres - Notice of statutory public meeting - Notice of Decision with appeal rights to OLT <u>Timing for Public Meetings:</u> Earliest day to hold a public meeting − **20 days** after the requirements for giving notice are met (official plans/amendments and community improvement plans) Latest time to hold a public meeting − **14 days** before a decision is made (plan of subdivision and condominium
Distribution of Notices	
Mandatory notification to the general public by: • Two public notices, and • those who have expressed interest by direct mail For Indigenous communities: Contact the MECP, for direction on how to identify Indigenous communities that may have an interest in the proposed project. Notices sent to federal, provincial and local government agencies and Indigenous Communities Notices to appropriate MECP Regional Email Accounts	Notice requirements are dependent upon type of planning instrument. Planning Act requirements for official plans/plan amendments, community improvement plans (O.Reg. 543/06) and plans of subdivision/condominium (O.Reg. 544/06) include: • forms of notice – (1) personal service **or** ordinary mail **and** by posting notice on a property **or** (2) by publishing a notice in a newspaper) • recipients of the notice to prescribed persons and public bodies, including Indigenous Communities and geographic areas for the distribution of notices (typically local government agencies) Notice to the relevant regional Municipal Services Office of the Ministry of Municipal Affairs and Housing

MUNICIPAL CLASS ENVIRONMENTAL ASSESMENT	PLANNING ACT
Content of Notice of Public Meeting / Notice of Completion	
Schedule B and C Projects • Date the notice was issued • Project name, description and purpose • Proponent name and contact information (address, phone, fax, email) where comments or questions should be directed to • Name of the Class EA being followed (e.g. the Municipal Class Environmental Assessment) • Schedule of the Class EA being followed (B or C, or Master Plan with specific approach) • A brief description of the project which outlines the nature of the problem or opportunity and the need for a solution • Map of where project is located (where applicable) • Public record locations were documents are located for viewing or information (where applicable) and when they are available to the public • Comment period deadline (30 days) • Meeting locations (where applicable) • Project website address (where applicable)	Notice content for **official plans/plan amendments and community improvement plans** are set out in the Planning Act and O.Reg. 543/06 for: • notices that exclude notices posted on a property (personal service, ordinary mail and newspaper) • notices that are posted on a property Notice content for **plans of subdivision/condominiums** (Planning Act and O.Reg. 544/06), including details relating to: • notices that exclude notices posted on a property (personal service, ordinary mail and newspaper) • notices that are posted on a property

MUNICIPAL CLASS ENVIRONMENTAL ASSESMENT	PLANNING ACT
• Freedom of Information and Protection of Privacy FIPPA disclaimers • For Notice of Completions - the provisions to request a section 16 order	
Availability of Documentation for Review (using an integrated approach, public review requirements must be met for both planning and class EA matters)	
Discretionary opportunities to review and comment on materials at various public meetings held at key milestones of the projects (2 to 3 meetings typical) Discretionary timelines to provide notice of public meeting (e.g. 2 weeks- varies) Discretionary documentation available for review on municipal web sites Minimum **30-day public, government agency, and Indigenous Community review** of final documentation (after Notice of Completion)	Official plans/secondary plans and community improvement plans a minimum **20-day** public review of related information and material prior to a public meeting In the case of a privately-initiated official plan amendment, supporting information and materials must be made available to the public within 15 days of application being determined to be complete. Plans of subdivision/condominiums Within **15 days of advising an applicant that its application is determined complete,** notice of a complete application is given and the supporting information and materials must be made available to the public. In giving notice of a public meeting a municipality must advise where and when additional information and material regarding the proposed plan of subdivision will be available to the public.
Notice of Completion / Notice of Adoption / Notice of Approval	
Individual Recipients: • Appropriate federal, provincial and local review agencies	MUNICIPALITY EXEMPT FROM APPROVAL Official plans/plan amendments and community improvement plans –

MUNICIPAL CLASS ENVIRONMENTAL ASSESMENT	PLANNING ACT
• Indigenous Communities • Those who provide a written request for notice • Public-Published notices (website, newspapers, other) • During **30-day** comment period after Notice of Completion is issued requests can be made to the Minister for a Section 16 Order (refer also to appeals below)	Written notice of adoption must be provided no later than **15 days** after the day a plan is adopted. Notice requirements are contained in the Planning Act and O.R. 543/06 for the • content of the notice, including who may appeal to the OLT, who may be added as a party to the hearing of the appeal and the last day for the filing of a notice of appeal • recipients of the notice MUNICIPALITY NOT EXEMPT FROM APPROVAL **Official plans/plan amendments** (excluding community improvement plans) Written notice of adoption must be provided no later than **15 days** after the day a plan is adopted. Notice requirements are contained in the Planning Act and O.Reg. 543/06 for the • content of the notice • recipients of the notice Materials are then forwarded to the approval authority who gives written notice of its decision. Notice requirements are contained the Planning Act and O.Reg. 543/06 for the: • content of the notice including who may appeal to the OLT and who may be added as a party to the hearing of the appeal • recipients of the notice **Plans of subdivision/condominium:** when the approval authority makes a decision, written notice of the decision must be provided with **15 days**. Notice requirements are contained in the Planning Act and O.Reg. 544/06 for the: • content of the notice, including who may appeal to the OLT and who may be added as a party to the hearing of the appeal recipients of the notice

MUNICIPAL CLASS ENVIRONMENTAL ASSESMENT	PLANNING ACT
	• recipients of the notice
Section 16 Orders/Appeals To OLT	
• Members of the public, interest groups, Indigenous communities and review agencies may request the Minister of the Environment, Conservation and Parks impose conditions or require an Individual EA be completed under section 16 of the EAA (section 16 order request) related to an Aboriginal or treaty right, before proceeding with a proposed undertaking.	MUNICIPALITIES EXEMPT FROM APPROVAL **Official plans/plan amendments and community improvement plans:** not later than **20 days** after the day that the giving of notice is completed, all or part of the decision of council to adopt all or part of the plan may be appealed to the OLT by filing a notice of appeal with the clerk of the municipality MUNICIPALITIES NOT EXEMPT FROM APPROVAL: **Official plans/plan amendments** (excluding community improvement plans)**:** not later than **20 days** after the day that the giving of the notice of decision is completed, all or part of the decision of the approval authority may be appealed to the OLT by filing a notice of appeal with the approval authority ** **Plans of Subdivision/Condominium:** not later than **20 days** after the day that the giving of notice is completed, the decision, the lapsing provision or any of the conditions may be appealed to the OLT, by filing a notice of appeal with the approval authority ** **Where a municipality does not make the decision (i.e., not exempt from approval), it must forward its documentation to the approval authority - the upper tier or the province. Upon the giving of a notice of decision by the approval authority, the 20-day appeal period starts.

Note: The *Planning Act* and regulations provide for notice requirements, depending on the application type. The following sample is intended only as a guide for municipalities providing a Notice of a Public Meeting for an Official Plan Amendment in the context of an integrated approach. It is the responsibility of the municipality to fulfill the requirements of both the *Planning Act* and the EAA.

SAMPLE – NOTICE OF PUBLIC MEETING

(other than a Notice given by posting)

Notice of Public Meeting for a Proposed Official Plan Amendment

Notice of Completion of Class Environmental Assessment

A public meeting to receive input on the following application will be held on:
File Name:
File No.:
Date:
Time:
Place:

INSERT KEY MAP OF SUBJECT LAND

A request has been made by **[name]** to amend the Official Plan of **[name of municipality]** for lands known as **[description]**. The subject land has a frontage of **[length]** on **[street name]** and has an area of approximately **[size]**.

The Applicant (and **name of the municipality if co-proponent) is/are also planning** for certain infrastructure needed for the proposed development. This process is being conducted using an integrated approach in accordance with Section A.2.9 of the Municipal Class Environmental Assessment (EA), to meet the requirements of the *Environmental Assessment Act* and for approval under the *Planning Act*.

[Where infrastructure work is proposed outside of the Planning Act application boundaries, add:]

Elements of the infrastructure work identified above are proposed beyond the boundaries of this official plan amendment but is needed to serve the project. The lands affected as shown on the attached map and the elements include:

- [list of infrastructure work]

INSERT MAP OF ALL INFRASTRUCTURE WORK PROPOSED TO SUPPORT THE PROJECT

The requested Official Plan Amendment would amend the Official Plan of Plan of **[name of municipality]** in order to **[insert official plan amendment details**. including information related to the proposed infrastructure that is part of this integrated approach].

A copy of the proposed Official Plan Amendment and supporting information and material, along with documentation associated with the Municipal Class Environmental Assessment for the project are available for inspection between **[time]** and **[time]** at the **[municipal department]** at **[address(es)]**.

ANY PERSON may attend the public meeting to provide comments on the proposed Official Plan Amendment and the infrastructure project(s), including the Municipal Class Environmental Assessment documentation.

Comments may also be mailed to the **[name of municipality]** at the address above, faxed to **[fax number]** or e-mailed to **[e-mail address]** prior to the public meeting **[quote file name and number]**. If you are aware of any other individuals or landowners who may be interested in this matter, please advise them of the public meeting. A copy of the staff report and the Municipal Class Environmental Assessment documentation will be available from the **[specify contact]** on **[specify date and time]**.

A request to the Minister of the Environment, Conservation and Parks for an order under the *Environmental Assessment Act* imposing additional conditions or requiring an individual environmental assessment for the project proceeding through the Municipal Class Environmental Assessment process may be made on the grounds that the requested order may prevent, mitigate or remedy adverse impacts on constitutionally protected Aboriginal and treaty rights. Requests should include your full name and contact information.

Requests should specify what kind of order is being requested for what project(s) (additional conditions or an individual environmental assessment), explain how an order may prevent, mitigate or remedy potential adverse impacts, and can include any supporting information.

IF A PERSON or public body does not make oral submissions at the public meeting or make written submissions to **[name of municipality]** before the proposed Official Plan Amendment is adopted, the person or public body is not entitled to appeal the decision of the Council of **[name of municipality]** to the Ontario Land Tribunal.

IF A PERSON or public body does not make oral submissions at the public meeting or make written submissions to **[name of municipality]** before the proposed Official Plan Amendment is adopted, the person or public body may not be added as a party to the hearing of an appeal before the Ontario Land Tribunal unless, in the opinion of the Ontario Land Tribunal, there are reasonable grounds to add the person or public body as a party.

IF YOU WISH to be notified of the adoption of the proposed Official Plan Amendment, or of the refusal of a request to amend the Official Plan, you must make a written request to **[name and address of municipality]**.

[In cases where there are other applications, add:]

The subject land is subject to an application under the *Planning Act* for a [**type of application**] which is being processed under file number **xxxxx-xx**.

Contact Information:

Name:
Municipal Address:
Telephone:
Email:

DATED this day of , 20XX.

The Corporation of the
Town of Tecumseh

Public Works & Engineering Services

To: Mayor and Members of Council

From: Phil Bartnik, Director Public Works & Engineering Services

Date to Council: April 11, 2023

Report Number: PWES-2023-32

Subject: 2023 Supply of Various Vehicles

Recommendations

It is recommended:

That Administration **be authorized** to obtain quotations for the 2023 Supply of Various Vehicles as summarized in Attachment 1 to Report PWES-2023-32;

And that the equipment summarized in Attachment 2 to Report PWES-2023-32 **be declared** surplus and disposed of through Part VI, Disposal of Surplus or Scrap Materials and Equipment of the Town's Purchasing Policy;

And further that Appendix A titled "Town of Tecumseh 2023-2032 Ten Year Fleet Funding and Replacement Schedules" and Appendix B titled "Town of Tecumseh 2023-2032 Ten Year Fire and Rescue Services Apparatus Funding and Replacement Schedules" attached to Report PWES-2023-32, **be adopted** as amended;

And furthermore that funding for the purchase of the 2023 Supply of Various Vehicles outlined in Appendix A in the amount of $939,500 plus associated costs for outfitting, $18,000, for a total of 957,500 **be funded** from the Lifecycle Fleet Reserve.

Executive Summary

The Town has implemented a Fleet Replacement Schedule (Schedule) to efficiently manage the Town's fleet in a cost-effective manner. This Schedule is used as a guide

for purchasing new vehicles and equipment in the designated years. Prior to replacing the vehicles, inspections are conducted to confirm the timing of the replacement and a re-evaluation of the type of vehicle for replacement is considered to ensure the new replacement vehicle best serves the needs of each department.

In accordance with the Schedule, and in consultation with Administration, nineteen (19) vehicles and/or pieces of equipment are recommended for purchase in 2023, including the following:

1. One dump body, one extended cab truck, a water service truck, five pieces of equipment as well as the rehabilitation of Viking Inserts for Public Works and Transportation Services.

2. One skid steer, one tractor, one trailer and four mowers for Community & Recreation Services.

3. Allocation of funds for transit bus replacement to be addressed in a forthcoming report to Council.

Following Council's approval to purchase the recommended vehicles and equipment, in the amount of $957,500, requests for formal quotes for Supply of Various Vehicles (RFQs) will be prepared and advertised in accordance with the Town's Purchasing Policy.

Subsequent to the purchase and receipt of the new vehicles and equipment, the replaced vehicles and equipment will be declared surplus and sold at auction, in accordance with the Town's Purchasing Policy.

Fifteen years ago, the Town conducted a fleet review with the assistance of an external consultant. While this review is updated annually, Administration is looking to implement a fleet strategy when the Transportation Supervisor position is onboarded in 2024 that is forward-looking and considers innovations in the auto industry with a focus on electric vehicles. Research and industry consultations are being conducted to review the ever-changing landscape of electric vehicles. As options begin to align with the Towns replacement needs electric vehicles will be considered as viable replacement options.

Background

Council, at their meeting held on March 08, 2022, adopted the amended 2022-2031 Ten Year Fleet Replacement Schedule ("Fleet Replacement Schedule"), attached to Report PWES-2022-07 (Motion RCM-83/22) which is an annual report to Council outlining the recommended vehicles and equipment identified for replacement.

Comments

According to the Fleet Replacement Schedule and in consultation with Public Works, Water, Parks, Maintenance and Fire & Rescue, the following information on existing vehicles is provided for Council's consideration for the 2023 fleet replacements and additions:

Public Works and Engineering Services

1. **PW 03-12 Viking Tandem Insert – Rehab - $40,000**

   Public Works has reviewed the truck on which this insert is installed and Administration feels that the truck can be utilized for at least a few more years. The salter insert will be shipped to the manufacturer where rehabilitation will be completed which includes the replacement of the wearable parts of the equipment. This service option is only available for insert style salters. For less than half the cost of a new insert, Public Works will have a rehabilitated insert that will extend the useful life of this 2012 tandem truck and postpone full replacement, estimated at $320,000.

2. **PW 05-12 Viking Single Insert – Rehab - $40,000**

   Public Works has reviewed the truck on which this insert is installed and Administration feels that the truck can be utilized for at least a few more years. The salter insert will be shipped to the manufacturer where rehabilitation will be completed which includes the replacement of the wearable parts of the equipment. This service option is only available for insert style salters. For less than half the cost of a new insert, Public Works will have a rehabilitated insert that will extend the useful life of this 2012 single axle truck and postpone full replacement, estimated at $295,000.

3. **PW 08-12 3500 Truck & Dump Body - $75,000**

   This 2012 vehicle has over 50,000 kilometers on it. It has been used for all Public Works functions (i.e., road patrol to service calls) but specifically as a mid sized dump truck. It is used for all cold patching operations and towing of equipment and has reached its useful life. Administration recommends continuing with the replacement schedule of eight years due to the conditions of use and the current practice of replacement prior to incurring considerable expenses for repairs.

4. **PW 09-12 – 1500 Truck Ext. Cab - $ 45,000**

   This 2012 vehicle has over 107,820 kilometers on it. It has been used for all Public Works functions (i.e., road patrol to service calls), but specifically as the public works pool vehicle. It is driven extensively for service requests and all daily duties and has reached the end of its useful life. Administration recommends replacement of this vehicle in accordance with the replacement schedule of 8-10 years due to the

conditions of use and the current practice of replacement prior to incurring considerable expenses for repair.

5. John Deere Attachment – Breaker - $20,000

Currently, two of the three backhoes the Town uses are John Deere backhoes. This breaker, which is used to fracture concrete or asphalt, will be shared amongst all departments and fit all fleet backhoes.

6. John Deere Attachment – Thumb - $10,000

This attachment is a new addition to the fleet. Currently, two of the three backhoes the Town uses are John Deere backhoes. This thumb will assist with removal of debris from ditches and municipal drains. When the backhoe is replaced, this attachment can be removed and reused on the replacement.

7. John Deere Attachment – Ditching Bucket - $ 5,000

This attachment is a new addition to the fleet. Currently, two of the three backhoes the Town uses are John Deere backhoes. This ditching bucket will assist with maintenance of ditches and assist with water main repairs. When the backhoe is replaced, this attachment can be removed and reused on the replacement.

8. Trackless – Salter - $8,500

This attachment is the original attachment that was purchased by the Town in early 2000's with the original Trackless machine. The Trackless machine has since been replaced and Public Works has rebuilt and maintained this attachment until now. The unit has reached its useful lifespan and should be replaced.

9. Trackless Attachment – Blower - $13,000

This attachment is the original attachment that was purchased by the Town in early 2000's with the original Trackless machine. The Trackless machine has since ben replaced and Public Works has rebuilt and maintained this attachment until now. The unit has reached its useful lifespan and should be replaced.

10. W 3-14 Water Service Truck - $115,000

This 2014 truck is one of two primary service trucks in the Water Division, with 121,403 kilometers logged. In recent years, this vehicle has had recurring engine problems (i.e., injector replacements and electrical issues) and exhaust issues due to emission requirements with diesel vehicles, all of which have been costly to repair. This vehicle utilized an aluminum service body and it is starting to lose its paint in some areas. The truck has reached the end of its useful service life and therefore Administration recommends continuing with the current replacement schedule of eight years due to conditions of use and the current practice of replacing vehicles prior to incurring excessive repairs.

Community and Recreation Services

1. P 50-11 Kubota – Skid Steer - $80,000

This unit is the main piece of construction and maintenance equipment within the Parks Department. This unit has logged over 1,249 hrs to date and has reached the lifecycle for daily use. As with past practices the unit will be transferred to the Public Works Department and used sparingly on an as needed basis. The fleet replacement schedule has been crafted to allow units, that are in acceptable working order, to be repurposed for other departments that may not use them on a daily basis. Public Works will replace this unit in the future as part of the regular fleet replacement schedule.

2. P 10-14 Kubota L4600 Tractor - $42,000

The Parks Division has a fleet of three tractors used almost on a daily basis for the past 7 years. The 47 horse-power tractor is the Kubota 4701, used for turf improvement applications such as aerating, rolling and fertilizing as well as moving soil, sand and baseball clay as needed. This machine has been dependable to date, but major repairs are expected in coming years. The tractor has logged 964 hours to date, within the ideal limit of 1,000 to ensure a fair trade-in value. Replacing it now will ensure a reasonable trade-in value while providing a new machine that will be covered under a three-year warranty.

3. P 24-14 Trailer – Flat Bed 22’ - $12,000

This unit was approved for replacement last year, however, was not completed due to supply chain issues. The Parks Division intends to replace this unit in 2023, as previously approved with an adjustment to the allocation.

4. P 30-18 Jacobson HR 700 Mower - $140,000

This mower is one of two large mowers within the Parks fleet that undertakes the mowing of the larger parks and sports fields. This mower was purchased in 2018 and has 1,478 operating hours, which is well above the ideal trade-in limit of 1,000 hours. This mower has been well maintained and has had relatively few major repairs but is now out of warranty coverage and will be very costly to repair as it ages beyond four seasons of rigorous operation. By replacing this mower on a three-year schedule, we are receiving a respectable trade-in value with excellent performance from machines that are critical to the daily maintenance of the sports fields and parklands.

5. P 32-20, P 33-20 & P 35-20 & P 34-20 Kubota ZD 1211 Mowers - $26,000 each

The Parks Division has a fleet of six (6) zero-turn mowers that are used extensively on a daily basis throughout the warmer months to cut the turf in parks and sports fields. The three-year replacement schedule has proven to be very beneficial by greatly reducing any major repair costs, especially given that the units are under a limited 3-year warranty. Also, by keeping the hours under 1,000, we receive good trade-in values, making the annual operating costs very reasonable.

Development Services

1. **T 01-07 Transit Bus - $190,000**
   This allocation is a placeholder in the fleet schedule and will be detailed in a forthcoming report to Council.

Annual Fleet Replacement Costs

Appendix 'A' (attached) provides an updated summary of the annual fleet replacement costs scheduled for each department. The updated schedules reflect adjustments to the future costs based on current equipment values. Administration recommends that Council adopt the updated Appendix 'A' Town of Tecumseh 2023 – 2032 Ten Year Fleet Funding Replacement Schedules attached to Report PWES-2023-32.

Appendix 'B' (attached) provides the summary of the annual fire apparatus replacement costs scheduled for the Community Safety department. The schedules reflect adjustments to the future costs based on current equipment values. Administration recommends that Council adopt the updated Appendix 'B' Town of Tecumseh 2023 – 2032 Ten Year Fire and Rescue Services Apparatus Funding and Replacement Schedules attached to Report PWES-2023-32.

Following Council's approval of the Report PWES-2023-32, Administration will prepare a "Request for Formal Quotes for Supply of Various Vehicles" (RFQ) with reference to the above noted vehicles to be replaced and in accordance with the Town's Purchasing Policy. The RFQ will be advertised on the Town's website. Each Manager will prepare a list of Suppliers and invitations to download the documents will be sent directly to each supplier.

Updating the Town's Fleet Strategy, including Green Fleet Considerations

In 2007, the Town undertook a fleet review prepared by an external consultant, Covenco Ltd. While this review has been updated annually, after 15 years, Administration has been working to modernize the review into a fleet management strategy with consideration for future technological advances associated with electric vehicles and associated infrastructure, such as charging stations. The Town has installed the first of ten charging stations through a partnership with Essex Powerlines with plans to continue to install additional electric vehicle charging stations at various Town facilities over the next year. Additionally, Administration is continuing to investigate the Electric Vehicle Chargers Ontario grant program (EVCO) to create a network of public electric vehicle fast-charging stations. The EVCO program is designed to cover the purchase and installation cost of public fast-charging stations along major transportation corridors and in urban centres across the province.

It is further anticipated that when the Transportation Supervisor position is onboarded in 2024 (in accordance with the Organizational Review) it is intended that a Fleet

Management Strategy will be conducted to look for efficiencies, financial savings and other considerations.

Administration has been in consultation with local dealerships inquiring into the local availability for electric vehicles that could be incorporated into the Town fleet. Currently Ford has an electric truck in production although the availability is limited at this time. Dodge and General Motors are anticipating early 2024 will be the roll out of electric trucks throughout the industry. Administration intends that as the new fleet strategy progresses, a process for evaluating replacements with comparable e-vehicles will be established and implemented as the industry evolves to bring more models online.

Surplus

Following Council's approval of the recommendations within this report, and upon receipt of the new equipment, Administration proposes that the replaced vehicles be declared surplus and sold at Auction.

Consultations

Community & Recreation Services
Development Services
Financial Services

Financial Implications

In addition to the purchase cost of the vehicles, there is an associated cost to "outfit" them for their intended use. The cost associated with outfitting each of the vehicles is approximately $3,000 for a total cost of $18,000.

The estimated cost net of recoverable taxes is $939,500 plus $18,000 in outfitting for a total of $957,500, with $957,500 to be funded from the Lifecycle Fleet Reserve and $0 to be funded from the Lifecycle Community Safety (formerly Fire) Apparatus Reserve. Total expenditures per Attachment A of $1,262,500 includes the proposed purchases referenced within this report of $957,500 plus $305,000 of vehicles tendered in 2022, however not yet received or paid.

An increase to the target annual allocation, or annual requirement, to the Lifecycle Fleet Reserve of $3,000 should be included in the 2024 Budget process to accommodate the backhoe equipment additions to the Town fleet.

As per last year's fleet replacement report PWES-2022-07 "2022 Supply of Various Vehicles", both Reserves were projected to be fully funded for the 10-year planning horizon assuming annual target allocations of $520,000 to the Fleet Lifecycle Reserve

and $334,000 to the Community Safety Apparatus Reserve achieved by 2026 and 2025 respectively.

Through the 2023 Budget process, the target annual allocation for the Lifecycle Fleet Reserve was proposed to increase from $540,000 to $558,000 referencing PWES-2022-07. The actual allocation approved through the 2023 Budget process was increased by $40,000 from $440,000 to $480,000. Appendix A reflects the approved allocation for 2023 along with proposed increases in the following years to achieve the target allocation of $558,000 by 2026.

Through the 2023 Budget process, the target annual allocation for the Lifecycle Community Safety Apparatus Reserve was increased by $35,000, from $294,000 to $329,000 referencing PWES-2022-07. The actual allocation approved through the 2023 Budget process was increased by $25,000, from $214,000 to $239,000. Appendix B reflects the approved allocation for 2023 along with proposed increases in the following years to achieve the target allocation of $329,000 by 2026.

Despite the proposed future increases to reach those annual allocations by 2026, both Reserves project to be in significant deficit balances for the 2023-2032 10-year planning horizon. This is primarily due to extraordinary inflationary pressures experienced in all fleet categories during the past two years. Reductions to grant programs available to municipalities for fleet purchases is also a contributing factor, however not nearly to the degree of inflation.

Alternative solutions to traditional replacement, such as the tandem and single axle insert refurbishments, provide some relief in the near term and, depending on performance, may be part of the Town’s fleet strategy going forward.

Barring other initiatives that may provide financial savings, further increases to both Reserve annual requirements must be considered for the 2024 Budget process.

Link to Strategic Priorities

Applicable	2019-22 Strategic Priorities
☐	Make the Town of Tecumseh an even better place to live, work and invest through a shared vision for our residents and newcomers.
☒	Ensure that Tecumseh's current and future growth is built upon the principles of sustainability and strategic decision-making.
☐	Integrate the principles of health and wellness into all of Tecumseh's plans and priorities.
☒	Steward the Town's "continuous improvement" approach to municipal service delivery to residents and businesses.
☐	Demonstrate the Town's leadership role in the community by promoting good governance and community engagement, by bringing together organizations serving the Town and the region to pursue common goals.

Communications

Not applicable ☒

Website ☐ Social Media ☐ News Release ☐ Local Newspaper ☐

This report has been reviewed by Senior Administration as indicated below and recommended for submission by the Chief Administrative Officer.

Prepared by:

Dana Reid
Public Works & Engineering Services Assistant

Reviewed by:

Kirby McArdle, P.Eng.
Manager Public Works & Transportation

Reviewed by:

Beth Gignac, BA Hons
Director Community & Recreation Services

Reviewed by:

Tom Kitsos, CPA, CMA, BComm
Director Financial Services & Chief Financial Officer

Reviewed by:

Brian Hillman, MA, MCIP, RPP
Director Development Services

Reviewed by:

Phil Bartnik, P.Eng.
Director Public Works & Engineering Services

Recommended by:

Margaret Misek-Evans, MCIP, RPP
Chief Administrative Officer

Attachment Number	**Attachment Name**
1	Summary of 2023 Supply of Various Vehicles
2	Summary of Equipment to be Declared Surplus
3	Attachment 3 – Appendix A
4	Attachment 4 – Appendix B

PWES-2023-32 - Attachment 1
Summary of 2023 Supply of Various Vehicles

Public Works and Engineering Services	**Estimated Price**
Viking Tandem Insert – Rehab	$40,000
Viking Single Insert – Rehab	$40,000
3500 Truck & Dump Body	$75,000
1500 Truck Ext. Cab	$45,000
John Deere – Attachment – Breaker	$20,000
John Deere – Attachment – Thumb	$10,000
John Deere – Attachment – Ditching Bucket	$5,000
Trackless Attachment – Salter	$8,500
Trackless Attachment – Blower	$13,000
Water Service Truck & Body	$115,000
Community & Recreation Services	**Estimated Price**
Kubota – Skid Steer	$80,000
Kubota – L4701 Tractor	$42,000
Trailer – Flat Bed 22’	$12,000
Jacobson – Mower	$140,000
Kubota – ZD 1211 Mower (4)	$26,000/ea.
Development Services	**Estimated Price**
Transit Bus	$190,000

PWES-2023-32 - Attachment 2
Summary of Equipment to be Declared Surplus

Public Works and Engineering Services	**Unit Number**	**Year Purchased**
3500 Truck & Dumb Body	PW 08-12	2011
1500 Truck Ext. Cab	PW 09-12	2011
Water Service Truck	W3-14	2014
Backhoe Breaker	N/A	2003
Trackless Salter	N/A	2000
Trackless Blower	N/A	2000
Community & Recreation Services	**Unit Number**	**Year Purchased**
Kubota – Skid Steer	P 50-11	2011
Kubota – L4701 Tractor	P 11-15	2015
Trailer - Flat Bed 22’	P 24-14	2014
Jacobson HR 700 Mower	P 30-18	2018
Kubota ZD 1211 Mower (4)	P 32-20, P 35-20 & P33-20 & P34-20	2020
Development Services	**Unit Number**	**Year Purchased**
Transit Bus	T01-17	2017

Appendix A

Town of Tecumseh

2023-2032 Ten Year Fleet Funding and Replacement Schedules - Public Works

Unit Number	Year Purchased	Type	Make	Replacement Value	Life Span (yrs)	2023	2024	2025	2026	2027	2028	2029	2030	2031	2032
PW 03-12	2011	Tandem axle pre wet w/wing	Mack (tandem axle pre wet w/wing)	$ 320,000	7 to 10	$ 40,000	$ -	$ -	$ -	$ -	$ 320,000	$ -	$ -	$ -	$ -
PW 05-13	2012	Single axle pre wet	Freightliner SD180 (single axle/pre wet)	$ 295,000	7 to 10	$ 40,000	$ -	$ -	$ -	$ 295,000	$ -	$ -	$ -	$ -	$ -
PW 07-21	2021	3500 Dump	Chev 3500 Dump Body	$ 75,000	10	$ -	$ -	$ -	$ -	$ -	$ -	$ -	$ 75,000	$ -	$ -
PW 08-12	2012	3500 Dump	Dodge 3500 Aluminum Dump Body	$ 75,000	10	$ 75,000	$ -	$ -	$ -	$ -	$ -	$ -	$ -	$ -	$ -
PW 02-18	2018	1500 Ext Cab	GMC Ext Cab1500	$ 45,000	8	$ -	$ -	$ -	$ 45,000	$ -	$ -	$ -	$ -	$ -	$ -
PW 10-14	2014	1500 Reg Cab	Dodge 1500 4X4	$ 50,000	10	$ -	$ 50,000	$ -	$ -	$ -	$ -	$ -	$ -	$ -	$ -
PW 09-12	2012	1500 Ext Cab	Dodge Ext Cab1500	$ 45,000	11	$ 45,000	$ -	$ -	$ -	$ -	$ -	$ -	$ -	$ -	$ -
PW 11-12	2011	1500 Ext Cab	Dodge Ext Cab1500	$ 45,000	11	$ 45,000	$ -	$ -	$ -	$ -	$ -	$ -	$ -	$ -	$ -
PW 13-15	2014	Single axle pre wet	Mack (single axle pre wet)	$ 295,000	7 to 10	$ -	$ 295,000	$ -	$ -	$ -	$ -	$ -	$ -	$ -	$ -
PW 15-16	2016	Single axle pre wet	Freightliner SD180 (single axle/pre wet)	$ 295,000	7 to 10	$ -	$ -	$ -	$ 295,000	$ -	$ -	$ -	$ -	$ -	$ -
PW 06-18	2018	1500 Ext Cab	Chevy Extended Cab 4 X 4-Storm Sewer	$ 45,000	7 to 10	$ -	$ -	$ -	$ -	$ -	$ 45,000	$ -	$ -	$ -	$ -
PW 16-15	2014	Tandem axle w/wing	Mack (tandem axle w/wing)	$ 320,000	7 to 10	$ -	$ -	$ 320,000	$ -	$ -	$ -	$ -	$ -	$ -	$ -
PW 01-18	2018	Tandem axle pre wet w/wing	Freightliner (tandem axle pre wet w/wing)	$ 320,000	7 to 10	$ -	$ -	$ -	$ -	$ 320,000	$ -	$ -	$ -	$ -	$ -
PW 04-22	2022	Single axle pre wet w/wing	Freightliner SD180 (single axle/pre wet)	$ 295,000	7 to 10	$ -	$ -	$ -	$ -	$ -	$ -	$ -	$ -	$ -	$ 295,000
PW 14-18	2018	1500 Reg Cab	Chevy Extended Cab 4x4 Truck- Drainage	$ 50,000	7 to 10	$ -	$ -	$ -	$ -	$ -	$ 50,000	$ -	$ -	$ -	$ -
PW 17-19	2019	2500 Crew Cab	Dodge Ram 2500	$ 60,000	7 to 10	$ -	$ -	$ -	$ -	$ 60,000	$ -	$ -	$ -	$ -	$ -
PWE 02-13	2013	Backhoe	Cat 420F Backhoe -John Deere 310 D	$ 175,000	10 to 15	$ -	$ -	$ -	$ 175,000	$ -	$ -	$ -	$ -	$ -	$ -
PWE 03-14	2014	Backhoe	Case 580 WT Backhoe	$ 175,000	10 to 15	$ -	$ 175,000	$ -	$ -	$ -	$ -	$ -	$ -	$ -	$ -
PWE	2003	Breaker	Backhoe Attachment-Breaker for JD	$ 20,000	15	$ 20,000	$ -	$ -	$ -	$ -	$ -	$ -	$ -	$ -	$ -
PWE	2003	Thumb	Backhoe Attachment- Thumb for JD	$ 10,000	15	$ 10,000	$ -	$ -	$ -	$ -	$ -	$ -	$ -	$ -	$ -
PWE	2003	Bucket	Backhoe Attachment-Ditching bucket	$ 5,000	15	$ 5,000	$ -	$ -	$ -	$ -	$ -	$ -	$ -	$ -	$ -
PWE 04-13	2013	Sweeper	Elgin Whirlwind Sweeper	$ 290,000	15 to 20	$ -	$ -	$ -	$ -	$ -	$ 290,000	$ -	$ -	$ -	$ -
PWE 05-13	2013	Sidewalk Tractor	Trackless M6	$ 150,000	13	$ -	$ -	$ 150,000	$ -	$ -	$ -	$ -	$ -	$ -	$ -
PWE 05-16	2016	Flail Boom	Trackless Attachment-Flail Boom	$ 30,000	10	$ -	$ -	$ -	$ 30,000	$ -	$ -	$ -	$ -	$ -	$ -
PWE	2000	Salter Unit	Trackless Attachment- Salter	$ 8,500	10	$ 8,500	$ -	$ -	$ -	$ -	$ -	$ -	$ -	$ -	$ -
PWE	2000	Double Auger Blower	Trackless Attachment- Blower	$ 13,000	10	$ 13,000	$ -	$ -	$ -	$ -	$ -	$ -	$ -	$ -	$ -
PWE 11-22	2022	Tractor	John Deere Tractor	$ 136,000	15	$ -	$ -	$ -	$ -	$ -	$ -	$ -	$ -	$ -	$ -
PWE 12-17	2011	Skid Steer-Loader	Bobcat S-185 - from Parks Dept.	$ 80,000	6	$ -	$ 80,000	$ -	$ -	$ -	$ -	$ -	$ 80,000	$ -	$ -
PWE-18-22	2022	RTV- With Snow Plow	Kubota	$ 30,000	5	$ -	$ -	$ -	$ -	$ 26,000	$ -	$ -	$ -	$ -	$ 32,000
			Total	$ 3,787,500		$ 301,500	$ 600,000	$ 470,000	$ 545,000	$ 701,000	$ 705,000	$ -	$ 155,000	$ -	$ 327,000

Appendix B
Town of Tecumseh
2023-2032 Ten Year Fire and Rescue Services Apparatus Funding Schedule

Account	2023	2024	2025	2026	2027	2028	2029	2030	2031	2032
Reserve Carried Forward	$ 1,593,000	$ 1,832,000	$ 2,101,000	$ (400,000)	$ (777,000)	$ (448,000)	$ (825,000)	$ (1,202,000)	$ (873,000)	$ (544,000)
Apparatus Lifecycle	$ 239,000	$ 269,000	$ 299,000	$ 329,000	$ 329,000	$ 329,000	$ 329,000	$ 329,000	$ 329,000	$ 329,000
Total Funds Available	**$ 1,832,000**	**$ 2,101,000**	**$ 2,400,000**	**$ (71,000)**	**$ (448,000)**	**$ (119,000)**	**$ (496,000)**	**$ (873,000)**	**$ (544,000)**	**$ (215,000)**

Appendix B

Town of Tecumseh

2023-2032 Ten Year Fire and Rescue Services Apparatus Replacement Schedule

Department	2023	2024	2025	2026	2027	2028	2029	2030	2031	2032
Fire Apparatus	$ -	$ -	$ 2,800,000	$ 700,000	$ -	$ 700,000	$ 700,000	$ -	$ -	$ -
Sub-total	**$ -**	**$ -**	**$ 2,800,000**	**$ 700,000**	**$ -**	**$ 700,000**	**$ 700,000**	**$ -**	**$ -**	**$ -**
Committed - carry forward	$ -	$ -	$ -	$ -	$ -	$ -	$ -	$ -	$ -	$ -
Outfitting	$ -	$ -	$ -	$ 6,000	$ -	$ 6,000	$ 6,000	$ -	$ -	$ 2,000
Total Expenditure	**$ -**	**$ -**	**$ 2,800,000**	**$ 706,000**	**$ -**	**$ 706,000**	**$ 706,000**	**$ -**	**$ -**	**$ 2,000**
Ending Balance	**$ 1,832,000**	**$ 2,101,000**	**$ (400,000)**	**$ (777,000)**	**$ (448,000)**	**$ (825,000)**	**$ (1,202,000)**	**$ (873,000)**	**$ (544,000)**	**$ (217,000)**

Appendix B
Town of Tecumseh
2023-2032 Ten-Year Fire and Rescue Services Apparatus Replacement Schedule

Unit Number	Year Purchased	Type	Make	Replacement Value	Yrs	2023	2024	2025	2026	2027	2028	2029	2030	2031	2032
104	2017	Rescue	Fort Garry (Pumper/Rescue 1)	$ 700,000	20	$ -	$ -	$ -	$ -	$ -	$ -	$ -	$ -	$ -	$ -
N/A	2008	Engine	Smeal (Engine 1)	$ 700,000	15	$ -	$ -	$ -	$ -	$ -	$ 700,000	$ -	$ -	$ -	$ -
92	2009	Engine	Smeal (Engine 2)	$ 700,000	15	$ -	$ -	$ -	$ -	$ -	$ -	$ 700,000	$ -	$ -	$ -
94	2006	Rescue	Rosenbauer Engine Tanker (Rescue 2)	$ 700,000	20	$ -	$ -	$ -	$ 700,000	$ -	$ -	$ -	$ -	$ -	$ -
N/A	2002	Aerial	Sutphen Platform (Truck 1)	$ 2,500,000	20	$ -	$ -	$ 2,500,000	$ -	$ -	$ -	$ -	$ -	$ -	$ -
F3-08	2008	2500 Crew Cab	Ford 250 (Squad 2)	$ 300,000	12	$ -	$ -	$ 300,000	$ -	$ -	$ -	$ -	$ -	$ -	$ -
F5-xx	2021	HW Rescue	Fleet addition for 2021	$ 210,000	12	$ -	$ -	$ -	$ -	$ -	$ -	$ -	$ -	$ -	$ -
	2019	Rescue Boat		$ 15,000	15	$ -	$ -	$ -	$ -	$ -	$ -	$ -	$ -	$ -	$ -
				$ 5,825,000		$ -	$ -	$ 2,800,000	$ 700,000	$ -	$ 700,000	$ 700,000	$ -	$ -	$ -

The Corporation of the Town of Tecumseh

Public Works & Engineering Services

To: Mayor and Members of Council

From: Phil Bartnik, Director Public Works & Engineering Services

Date to Council: April 11, 2023

Report Number: PWES-2023-33

Subject: 12th Concession Road Watermain Replacement Project – Tender Award

---

Recommendations

It is recommended:

That the tender for the 12th Concession Road Watermain Replacement Project in the amount of $195,900 (excluding HST) **be awarded** to SheaRock Construction Group Inc;

And that By-law 2023-48 be given first, second, third and final reading, **to authorize** the Mayor and Clerk to execute an agreement, satisfactory in form to the Town's Solicitor with SheaRock Construction Group Inc.;

And further that project funding allocations, reflecting a total budget requirement of $296,000, with a $16,000 increase to the original allocation, **be accommodated** as follows:

- Watermain Reserve Fund – increase from $280,000 to $296,000

Background

At the January 26, 2023 Regular Meeting of Council, Council approved the recommendations (Motion SCM-04/23) of PWES Report No. 2023-01 titled "2023-2027 Public Works & Environmental Services Five Year Capital Works Plan" that authorized

Administration to proceed with the 2023 capital works projects, including the 12th Concession Road Watermain Replacement Project.

The project work generally consists of the replacement of approximately 185 m of existing 150 mm diameter cast iron watermain with new 150 mm diameter PVC watermain by directional drilling methods on 12th Concession Road just south of Pike Creek (refer to Attachment 1 for the project location map). The works also include the replacement of all existing private water connections and required restorations.

Comments

A Tender call was advertised on the Town's website along with being posted on the Town's bids and tenders account on March 7, 2023. Two (2) tender submissions were received on March 30, 2023, and were virtually opened in the presence of Administration and the Director Financial Services & Chief Financial Officer.

Dillon Consulting Limited (Dillon) has reviewed the tenders and provided the attached March 31, 2023 summary/recommendation letter (see Attachment 2). The tender results are summarized as follows:

Tenderer	Total Tender Price (excluding HST)
SheaRock Construction Group Inc.	$195,900
J.C.S. Construction Inc.	* $203,785

*corrected Total Bid Amount

As part of their review, Dillon checked each submission for irregularities and found that minor mathematical errors were made in the submission of J.C.S. Construction Inc. The total corrected tender price is shown above. The correction to the submission from J.C.S. Constructions Inc. did not change the original standings of the tenderers.

All Tenderers submitted the required Bid Bond.

Based on their low tender submission and subsequent discussions, Administration, in consultation with Dillon, recommends that Council award the tender for the 12th Concession Road Watermain Replacement Project in the amount of $195,900 (excluding HST), to SheaRock Construction Group Inc. and that the Mayor and Clerk be authorized to execute an agreement, satisfactory in form to the Town's Solicitor, with SheaRock Construction Group Inc.

Consultations

Financial Services
Dillon Consulting Limited

Financial Implications

PWES Report No. 2023-01 provided an estimated project cost of $280,000 for the 12th Concession Watermain Replacement Project with funding being approved from the Watermain Reserve Fund. The tendered/projected costs are summarized below:

Cost Item	Amount
Construction (tender)	$195,900
Engineering	$65,000
Geotechnical	$10,000
Budgetary Contingency	$20,000
Sub-total	$290,900
Non-rebateable HST (1.76%)	$5,100
Total	**$296,000**

The total tendered/projected cost estimate for the 12th Concession Road Watermain Replacement Project is $296,000 which is $16,000 above the approved funding allocation of $280,000. It is recommended that this additional amount be funded from the Watermain Reserve Fund.

Link to Strategic Priorities

Applicable	2019-22 Strategic Priorities
☐	Make the Town of Tecumseh an even better place to live, work and invest through a shared vision for our residents and newcomers.
☒	Ensure that Tecumseh's current and future growth is built upon the principles of sustainability and strategic decision-making.
☐	Integrate the principles of health and wellness into all of Tecumseh's plans and priorities.
☒	Steward the Town's "continuous improvement" approach to municipal service delivery to residents and businesses.
☐	Demonstrate the Town's leadership role in the community by promoting good governance and community engagement, by bringing together organizations serving the Town and the region to pursue common goals.

Communications

Not applicable ☒

Website ☐ Social Media ☐ News Release ☐ Local Newspaper ☐

This report has been reviewed by Senior Administration as indicated below and recommended for submission by the Chief Administrative Officer.

Prepared by:

Dana Reid
Public Works & Engineering Services Assistant

Reviewed by:

John Henderson, P.Eng.
Manager Engineering Services

Reviewed by:

Tom Kitsos, CPA, CMA, BComm
Director Financial Services & Chief Financial Officer

Reviewed by:

Phil Bartnik, P.Eng.
Director Public Works & Engineering Services

Recommended by:

Margaret Misek-Evans, MCIP, RPP
Chief Administrative Officer

Attachment Number	**Attachment Name**
1	Location Map 12th Concession Watermain Replacement Project
2	Summary of Tender Results and Recommendation Letter

ATTACHMENT 1

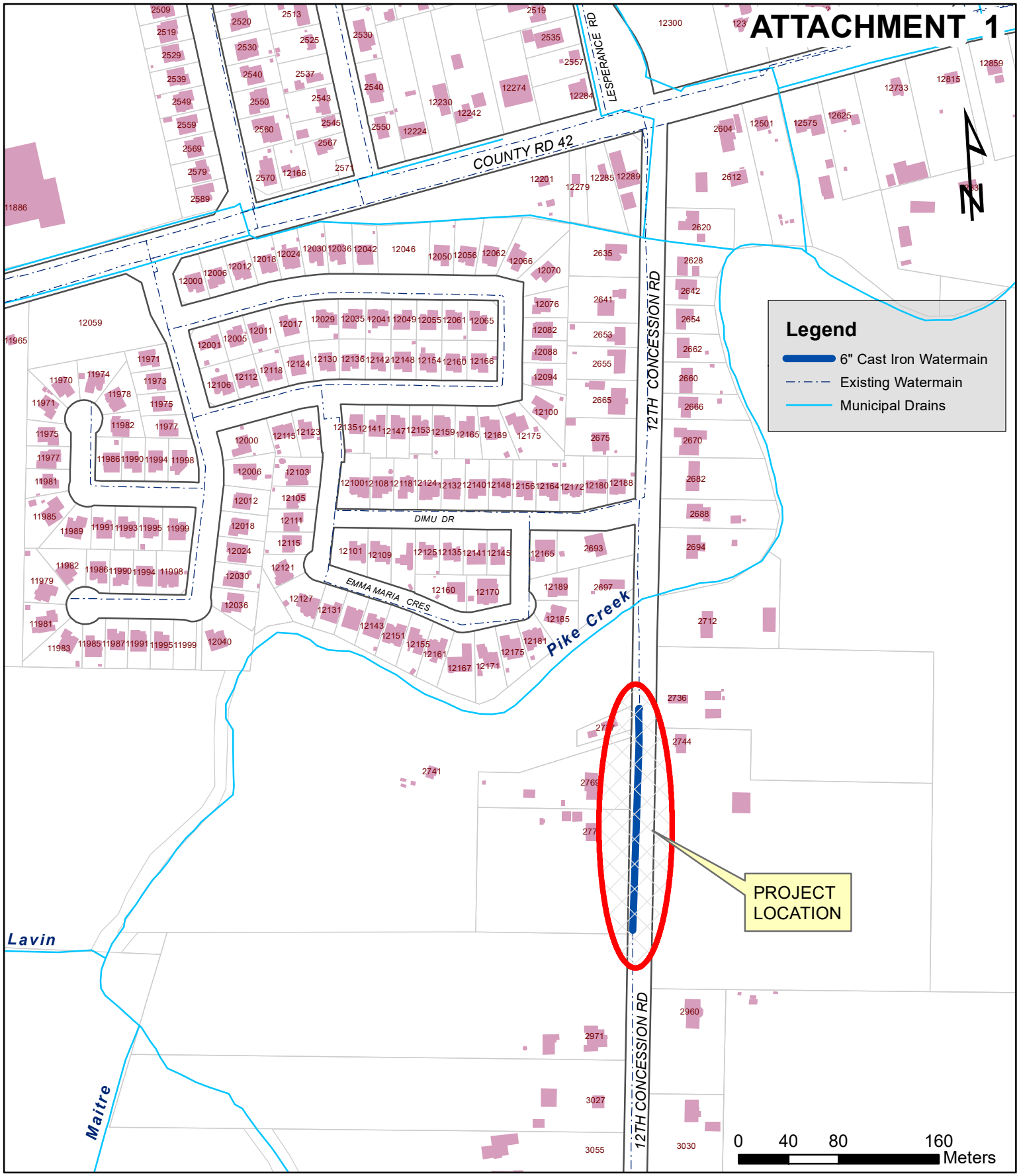

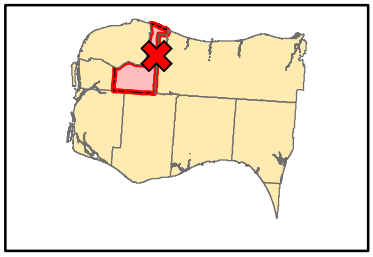

Report No. PWES-2023-33

CAST IRON

Watermain Replacement

12th Concession Road

March, 2023
Tecumseh G.I.S

DILLON
CONSULTING

3200 Deziel Drive
Suite 608
Windsor, Ontario
Canada
N8W 5K8
Telephone
519.948.5000
Fax
519.948.5054

Our File: 21-1254

March 31, 2023

SENT VIA EMAIL

Corporation of the Town of Tecumseh
917 Lesperance Road
Tecumseh, Ontario
N8N 1W9

Attention: Mr. John Henderson, P.Eng.
Manager Engineering Services

12th Concession Road Watermain – MUN. 2737 TO MUN. 2773
In the Town of Tecumseh
Summary of Bid Results

Two bids were received on March 30th, 2023, for this project. The bid results are summarized as follows:

Bidder	Total Tender Price (Excluding applicable taxes)	
SheaRock Construction Group Inc.	$195,900.00	
J.C.S. Construction Inc.	$203,785.00	*

***corrected Total Bid Amount**

Based on our review of the bid submissions, mathematical errors were made in the submission of J.C.S. Construction Inc. The corrected Total Tender Price is shown above.

There were no other irregularities identified in the tenders received for this work.

All bidders submitted the ten percent of the amount of tender Bid Bond which the Town has retained.

We have confirmed with Mr. Daryl Rocheleau of SheaRock Construction Group Inc., that SheaRock Construction Group Inc. is prepared to proceed with this project in accordance with the Contract Documents and their tender submission.

Dillon Consulting
Limited

Tender acceptance and Contract award is subject to the Town of Tecumseh's Procurement Policies and Procedures as outlined in the Town of Tecumseh Purchasing By-Law No. 2021-60 and Purchasing By-Law Amendment No. 2021-103. The tender shall be awarded to SheaRock Construction Group Inc. for the Total Tender Price of $195,900.00 (excluding applicable taxes) based on this policy and their lowest tender submission.

Subject to Client's approval of this outcome, we will prepare the necessary agreements for signing.

Yours sincerely,

DILLON CONSULTING LIMITED

Tina Hawco

Tina Hawco, P.Eng.,
Project Manager

TH:ldm
Encl.: Daryl Rocheleau - SheaRock Construction Group Inc.

The Corporation of the Town of Tecumseh

Public Works & Engineering Services

To: Mayor and Members of Council

From: Phil Bartnik, Director Public Works & Engineering Services

Date to Council: April 11, 2023

Report Number: PWES-2023-20

Subject: Amendment to the East Townline Drain (St. Clair Outlet) Drainage Assessment Schedule

---

Recommendations

It is recommended:

That Report PWES-2023-20 regarding a correction to Schedule A of By-law 2022-096, being a by-law which amended the drainage assessments estimated in the engineer's report based on actual costs incurred for the construction of the East Townline Drain (St. Clair Outlet), **be received**;

And that the recommended update to Schedule A of By-law 2022-096 **be approved** through the adoption of Amending By-law 2023-024.

Background

At the December 13, 2022 Regular Council Meeting, Council adopted the recommendations of Report PWES-2022-26 "Amendment to Drainage Assessment Schedules for Works Completed under Section 78 of the Drainage Act in 2021" (Motion: RCM-343/22). Included in this report was the adoption of By-law 2022-096 being a Capital Drain Levying By-law to provide for the collection of construction drainage assessments for the East Townline Drain (St. Clair Outlet).

Comments

Through the process of issuing the drainage assessment invoices for the East Townline Drain (St. Clair Outlet), Administration detected an inaccuracy with data presented in the schedule of Appendix A, including the total project costs that were identified within Report PWES-2022-26 and By-law 2022-096. Values depicted in the report and by-law did not equate to the actual total project costs.

The updated values for the East Townline Drain (St. Clair Outlet) are depicted in the table below.

Original By-Law	Drain Name	Engineer's Estimate	Actual Costs			OMAFRA Grant
			Total Project Cost	Pro-Rateable Cost	Non-Pro-Rateable Cost	
2019-21	East Townline Drain (St. Clair Outlet)	$544,638*	$693,745	$500,558	$193,187	$67,833

*Excluding HST non-refundable rebate of 1.76%

In addition to the above, the final assessment schedule for the drain has been updated and revisions will be required to the grant application submitted to OMAFRA as well as to assessment invoices that were distributed to property owners.

Consultations

Financial Services

Financial Implications

The total drainage assessment to the Town for the East Townline Drain improvements is approximately $127,300. The Town's drainage assessment will be funded out of the Municipal Drain Lifecycle Reserve.

Link to Strategic Priorities

Applicable	2019-22 Strategic Priorities
☐	Make the Town of Tecumseh an even better place to live, work and invest through a shared vision for our residents and newcomers.
☐	Ensure that Tecumseh's current and future growth is built upon the principles of sustainability and strategic decision-making.
☐	Integrate the principles of health and wellness into all of Tecumseh's plans and priorities.
☒	Steward the Town's "continuous improvement" approach to municipal service delivery to residents and businesses.
☐	Demonstrate the Town's leadership role in the community by promoting good governance and community engagement, by bringing together organizations serving the Town and the region to pursue common goals.

Communications

Not applicable ☒

Website ☐ Social Media ☐ News Release ☐ Local Newspaper ☐

This report has been reviewed by Senior Administration as indicated below and recommended for submission by the Chief Administrative Officer.

Prepared by:

Phil Bartnik, P.Eng.
Director Public Works & Engineering Services

Reviewed by:

Tom Kitsos, CPA, CMA, BComm
Director Financial Services & Chief Financial Officer

Recommended by:

Margaret Misek-Evans, MCIP, RPP
Chief Administrative Officer

Attachment Number	**Attachment Name**
None	None

The Corporation of the Town of Tecumseh

By-Law Number 2023-048

Being a by-law to authorize the execution of an Agreement between The Corporation of the Town of Tecumseh and Shearock Construction Group Inc, for the 12th Concession Road Watermain Mun. 2737 to Mun. 2773

Whereas Shearock Construction Group Inc was awarded the tender for the 12th Concession Road Watermain Mun 2737 to Mun 2773 in the Town of Tecumseh in accordance to the plans, drawings and specifications prepared by Dillon Consulting Limited;

And whereas The Corporation of the Town of Tecumseh is desirous of entering into an Agreement with Shearock Construction Group Inc. for the replacement of 12th Concession Road Watermain Mun 2737 to Mun 2773 in the Town of Tecumseh;

And whereas under Section 5 of the *Municipal Act 2001*, S.O. 2001 c.M.25, the powers of a municipality shall be exercised by its Council by by-law.

Now Therefore the Council of The Corporation of The Town of Tecumseh enacts as follows:

1. **That** the Mayor and the Clerk be and they are hereby authorized and empowered on behalf of The Corporation of the Town of Tecumseh, to execute an Form Agreement between The Corporation of the Town of Tecumseh and Shearock Construction Group Inc. dated the 11 day of April, 2023, and to do such further and other acts which may be necessary to implement the said Agreement.

2. **That** this by-law shall come into force and take effect upon on the date of the third and final reading thereof.

3. **Read** a first, second, third time and finally passed this 11th day of April, 2023.

_____

Gary McNamara, Mayor

_____

Robert Auger, Clerk

FORM OF AGREEMENT

FOR

12TH CONCESSION ROAD WATERMAIN

MUN. 2737 to MUN. 2773

THIS AGREEMENT made (in triplicate) this 11th day of April A.D. 2023

BETWEEN:

THE CORPORATION OF THE TOWN OF TECUMSEH
hereinafter called the "OWNER"

Of the First Part;

- and -

SHEAROCK CONSTRUCTION GROUP INC.
hereinafter called the "CONTRACTOR"

Of the Second Part.

Whereas the tender of the Contractor respecting the construction work, hereinafter referred to and described, was accepted by The Corporation of the Town of Tecumseh on the 11th day of April 2023.

Therefore this Agreement witnesseth that in consideration of the premises and the covenants hereinafter contained, the Parties hereto agree as follows:

1. The Contractor hereby covenants and agrees to provide and supply at its expense, all and every kind of labour, machinery, equipment and materials for and to undertake and complete in strict accordance with its tender dated the 30th day of March 2023 and the contract documents, including the general conditions of the contract, the plans and drawings and specifications prepared by DILLON CONSULTING LIMITED all of which said documents are annexed hereto and form part of this agreement to the same extent as if fully embodied herein, for the **12th Concession Road Watermain MUN. 2737 to MUN. 2773** and for the price or sum of **ONE HUNDRED AND NINETY FIVE THOUSAND, NINE HUNDRED DOLLARS AND ZERO CENTs (H.S.T. Excluded) ($195,900.00).**

2. The Contractor further covenants and agrees to undertake and complete the said work in a proper workmanlike manner within the period of time specified in the said tender.

3. The Contractor further covenants and agrees that it will at all times indemnify and save harmless the Owner, its officers, servants and agents, from and against all loss or damage, and from and against all actions, suits, claims and demands whatsoever which may be made or brought against the Owner, its officers, servants and agents by reason or in consequence of the execution and performance or maintenance of the said work by the Contractor, its servants, agents or employees. This indemnity shall be in addition to and not in lieu of any insurance to be provided by the Contractor in accordance with this Agreement and shall survive this Agreement.

4. The Contractor further covenants and agrees to furnish in accordance with the above specifications a Performance Bond and a Labour and Material Payment Bond each in the amount equivalent to one hundred percent (100%) of the Total Tender Price, in such form and issued by such surety as may be approved by the Owner's Solicitor, guaranteeing the faithful performance of the said work, in accordance with the terms of this agreement.

5. It is understood and agreed that the Contractor will not commence or proceed with the construction work herein before described or any party thereof, unless and until the Contractor has been instructed in writing to do so.

6. The Owner hereby covenants and agrees that if the said work shall be duly and properly executed and materials provided as aforesaid, and if the Contractor shall carry out, perform and observe all of the requirements and conditions of this agreement, the Owner will pay to the Contractor the contract price herein set forth in its tender, such payment or payments to be made in accordance with the provisions of the general conditions of the contract referred to above.

7. This agreement and everything herein contained shall ensure to the benefit of and be binding upon the Parties hereto, their successors and assigns, respectively.

IN WITNESS WHEREOF the Parties hereto have hereunto affixed their corporate seals duly attested by the hands of their proper Officers in that behalf, respectively.

SEAL

CORPORATION OF THE TOWN OF TECUMSEH
Owner

GARY MCNAMARA, MAYOR

ROBERT AUGER, DIRECTOR, LEGISLATIVE SERVICES AND CLERK

SHEAROCK CONSTRUCTION GROUP INC.
Contractor

Contractor's Signature

5085 Walker Road, Oldcastle, Ontario, N9G 0C6

Contractor's Address

The Corporation of the Town of Tecumseh

By-Law Number 2023-049

Being a by-law to authorize the execution of a Letter of Agreement between The Corporation of the Town of Tecumseh and Her Majesty the Queen in Right of Ontario as represented by the Minister of Transportation for Ontario relating to funding under the Dedicated Gas Tax Funds for Public Transportation program

Whereas the Province of Ontario established a Dedicated Gas Tax Fund for Public Transportation Program to increase public transportation ridership to support the development of strong communities;

And Whereas funding to municipalities by the Minister of Transportation for the Province of Ontario (MTO) will be provided in accordance with the terms and conditions set out in a Letter of Agreement and the Dedicated Gas Tax Funds for Public Transportation Program 2022/2023 Guidelines and Requirements;

And Whereas under Section 5 of the Municipal Act 2001, S.O. 2001 c.25, the powers of a municipality shall be exercised by its Council by by-law.

Now Therefore the Council of The Corporation of The Town of Tecumseh enacts as follows:

1. **That** the Mayor and Director Financial Services & Chief Financial Officer are hereby authorized and empowered on behalf of The Corporation of the Town of Tecumseh, to execute a Letter of Agreement between The Corporation of The Town of Tecumseh and Her Majesty the Queen in right of Ontario as represented by the Minister of Transportation for the Province of Ontario, a copy of which Letter of Agreement is attached hereto and forms part of this by-law and to do such further and other acts which may be necessary to implement the said Letter of Agreement for the provision of funding under the Dedicated Gas Tax Funds for Public Transportation Program for 2022/2023.

2. **That** this by-law shall come into force and take effect upon the date of the third and final reading.

Read a first, second, third time and finally passed this 11th day of April, 2023.

Gary McNamara, Mayor

Robert Auger, Clerk

Ministry of Transportation

Office of the Minister

777 Bay Street, 5th Floor
Toronto ON M7A 1Z8
416 327-9200
www.ontario.ca/transportation

Ministère des Transports

Bureau de la ministre

777, rue Bay, 5e étage
Toronto ON M7A 1Z8
416 327-9200
www.ontario.ca/transports

Ontario

February 24, 2023

107-2023-555

Mayor Gary McNamara
Town of Tecumseh
917 Lesperance Road
Tecumseh ON N8N 1W9

Dear Mayor McNamara:

RE: Dedicated Gas Tax Funds for Public Transportation Program

---

This Letter of Agreement between the **Town of Tecumseh** (the "Municipality") and His Majesty the King in right of the Province of Ontario, as represented by the Minister of Transportation for the Province of Ontario (the "Ministry"), sets out the terms and conditions for the provision and use of dedicated gas tax funds under the Dedicated Gas Tax Funds for Public Transportation Program (the "Program"). Under the Program, the Province of Ontario provides two cents out of the provincial gas tax to municipalities to improve Ontario's transportation network and support economic development in communities for public transportation expenditures.

The Ministry intends to provide dedicated gas tax funds to the Municipality in accordance with the terms and conditions set out in this Letter of Agreement and the enclosed Dedicated Gas Tax Funds for Public Transportation Program 2022-23 Guidelines and Requirements (the "guidelines and requirements").

In consideration of the mutual covenants and agreements contained in this Letter of Agreement and the guidelines and requirements, which the Municipality has reviewed and understands and are hereby incorporated by reference, and other good and valuable consideration, the receipt and sufficiency of which are expressly acknowledged, the Ministry and the Municipality agree as follows:

1. To support local public transportation services in the Municipality, the Ministry agrees to provide funding to the Municipality under the Program to a maximum amount of up to **$191,016** ("the "Maximum Funds") in accordance with, and subject to, the terms and conditions set out in this Letter of Agreement and, for greater clarity, the guidelines and requirements.

2. Subject to Section 1, the Ministry will, upon receipt of a fully signed copy of this Letter of Agreement and a copy of the authorizing municipal by-law(s) and, if applicable, resolution(s) for the Municipality to enter into this Letter of Agreement, provide the Municipality with **$143,262**; and any remaining payment(s) will be provided thereafter.

…/3

3. If another municipality authorizes the Municipality to provide local public transportation services on its behalf and authorizes the Municipality to request and receive dedicated gas tax funds for those services also on its behalf, the Municipality will in the by-law(s) and, if applicable, resolution(s) described in Section 2 confirm that the Municipality has the authority to provide those services and request and receive those funds.

4. The Municipality agrees that any amount payable under this Letter of Agreement may be subject, at the Ministry's sole discretion, to any other adjustments as set out in the guidelines and requirements.

5. The Municipality will deposit the funds received under this Letter of Agreement in a dedicated gas tax funds reserve account, and use such funds and any related interest only in accordance with the guidelines and requirements.

6. The Municipality will adhere to the reporting and accountability measures set out in the guidelines and requirements, and will provide all requested documents to the Ministry.

7. The Municipality agrees that the funding provided to the Municipality pursuant to this Letter of Agreement represents the full extent of the financial contribution from the Ministry and the Province of Ontario under the Program for the 2022-23 Program year.

8. The Ministry may terminate this Letter of Agreement at any time, without liability, penalty or costs upon giving at least thirty (30) days written notice to the Municipality. If the Ministry terminates this Letter of Agreement, the Ministry may take one or more of the following actions: (a) cancel all further payments of dedicated gas tax funds; (b) demand the payment of any dedicated gas tax funds remaining in the possession or under the control of the Municipality; and (c) determine the reasonable costs for the Municipality to terminate any binding agreement(s) for the acquisition of eligible public transportation services acquired, or to be acquired, with dedicated gas tax funds provided under this Letter of Agreement, and do either or both of the following: (i) permit the Municipality to offset such costs against the amount the Municipality owes pursuant to paragraph 8(b); and (ii) subject to Section 1, provide the Municipality with funding to cover, in whole or in part, such costs. The funding may be provided only if there is an appropriation for this purpose, and in no event will the funding result in the Maximum Funding exceeding the amount specified under Section 1.

9. Any provisions which by their nature are intended to survive the termination or expiration of this Letter of Agreement including, without limitation, those related to disposition, accountability, records, audit, inspection, reporting, communication, liability, indemnity, and rights and remedies will survive its termination or expiration.

10. This Letter of Agreement may only be amended by a written agreement duly executed by the Ministry and the Municipality.

11. The Municipality agrees that it will not assign any of its rights or obligations, or both, under this Letter of Agreement.

…/3

12. The invalidity or unenforceability of any provision of this Letter of Agreement will not affect the validity or enforceability of any other provision of this Letter of Agreement. Any invalid or unenforceable provision will be deemed to be severed.

13. The term of this Letter of Agreement will commence on the date of the last signature of this Letter of Agreement.

14. The Municipality hereby consents to the execution by the Ministry of this Letter of Agreement by means of an electronic signature.

If the Municipality is satisfied with and accepts the terms and conditions of this Letter of Agreement, please print and secure the required signatures, and then deliver a fully signed pdf copy to the Ministry at the email account below. Subject to the province's prior written consent, including any terms and conditions the Ministry may attach to the consent, the Municipality may execute and deliver the Letter of Agreement to the Ministry electronically. In addition, all program documents are also to be sent to the following email account: MTO-PGT@ontario.ca

Sincerely,

Caroline Mulroney
Minister of Transportation

I have read and understand the terms and conditions of this Letter of Agreement, as set out above, and, by signing below, I am signifying the Municipality's consent to be bound by these terms and conditions.

Municipality : Town of Tecumseh

April 11th 2023
Date

Name: Gary McNamara
Title: Mayor

I have authority to bind the Municipality.

April 11th 2023
Date

Name: Tom Kitsos
Title: Chief Financial Officer

I have authority to bind the Municipality.

The Corporation of the Town of Tecumseh

By-Law Number 2023-050

Being a by-law to Appoint a By-Law Enforcement Officer
for the Corporation of the Town of Tecumseh

Whereas, Section 227 of the Municipal Act, 2001, S.O. 2001, c. 25 and amendments thereto provides that it is the role of the officers and employees of the municipality:

a) To implement council's decisions and establish administrative practices and procedures to carry out council's decisions;
b) To undertake research and provide advice to council on the policies and programs of the municipality; and
c) To carry out other duties required under this or any Act and other duties assigned by the municipality.

And whereas, Section 15 of the Police Services Act, R.S.O. 1990 and amendments thereto allows for Councils to appoint persons to enforce the By-Laws of the municipality;

And Whereas pursuant to subsection 1(1) of the *Provincial Offences Act*, R.S.O. 1990, c.P.33 a provincial offences officer includes: a municipal law enforcement officer referred to in subsection 101 (4) of the *Municipal Act, 2001* or in subsection 79 (1) while in the discharge of their duties; a by-law enforcement officer of any municipality or its local board(s) while in the discharge of their duties, and an officer, employee or agent of any municipality or of any local board of any municipality whose responsibilities include the enforcement of a by-law, an Act or a regulation under an Act while in the discharge of their duties;

And Whereas the Attorney General of Ontario has ruled that By-law Enforcement Officers appointed by a municipality are automatically designated as Provincial Offences Officers for the purpose of enforcing the By-laws of the municipality;

And Whereas pursuant to Subsection 435(1)1 of the *Municipal Act* 2001, S.O. 2001 c. 25, the power of a municipality of entry under Sections 438 and 439, shall be exercised by an employee, officer or agent of the municipality or a member of the police force of the municipality.

And whereas, the Town of Tecumseh is desirous of appointing a By-Law Enforcement Officer;

Now therefore be it resolved that the Council of The Corporation of the Town of Tecumseh enacts as follows:

1. **That** Jason Coates shall be appointed as a By-Law Enforcement Officer for the Corporation of the Town of Tecumseh effective immediately and with full authority to enforce the by-laws of the Municipality;

2. **That** this by-law shall come into force and take effect on the date of its final passing.

Read a first, second and third time and finally passed this 11th day of April, 2023.

Gary McNamara, Mayor

Robert Auger, Clerk

The Corporation of the Town of Tecumseh

By-Law Number 2023-024

Being a by-law to amend By-Law 2022-096 being a by-law to amend drainage assessments estimated in engineer reports based on actual costs incurred for the construction of the East Townline Drain (St. Clair Outlet)

Whereas By-Law 2019-021 was passed by The Corporation of the Town of Tecumseh to authorize the construction, repair and/or improvement of East Townline Drain (St. Clair Outlet). on the 25th of June 2019 (the 'Drainage By-law'),

And Whereas By-Law 2022-096 and its Appendix A was passed by The Corporation of the Town of Tecumseh on December 13, 2022 so as to provide authorization to levy and collect upon such lands as described in the Drainage By- Law in accordance with the costs so referenced in its Appendix A which amounts are to reflect actual costs and with such amounts or rates to be levied and collected in the same manner as taxes.

And Whereas the amounts originally reflected in Appendix A to By-Law 2022-096 have, due to clerical error, been incorrectly stated such that the amounts so stated do not properly reflect the final assessment schedule as approved via By-Law 2019-021.

And Whereas it is now desirous to accordingly amend Appendix A to By-Law 2022-096 to correct the proper costs that are reflected in the final assessment schedule per By-Law 2019-021.

Now Therefore the Council of The Corporation of The Town of Tecumseh enacts as follows:

1. **That** Appendix A to By-Law 2022-096 be deleted in its entirety and replaced with Appendix A and the amounts stated therein as attached hereto and forming part of this amending by-law;

2. That this by-law shall come into force and take effect on the date of the third and final reading thereof; and

Read a first, second, third time and finally passed this 11th day of April, 2023.

_____

Gary McNamara, Mayor

_____

Robert Auger, Clerk

Appendix A – Complete Capital – 2022 Taxes

Original By-Law	Drain Name	Engineer's Estimate	Actual Costs			OMAFRA Grant
			Total Project Cost	Pro-Rateable Cost	Non-Pro-Rateable Cost	
2019-21	East Townline Drain (St. Clair Outlet)	$544,638*	$693,745	$500,558	$193,187	$67,833

* Excluding HST non-refundable rebate of 1.76%

The Corporation of the Town of Tecumseh

By-Law Number 2023 - 021

Being a bylaw to provide for the repair and improvements to the Demonte Drain

Whereas the Council of The Corporation of the Town of Tecumseh (hereafter "Town") has been requested to provide for the repair and improvement of the Demonte;

And Whereas the Town procured a Drainage Report for the Demonte and specifications from the consulting engineering firm of Dillon Consulting Limited, dated August 5, 2022 (hereafter "Drainage Report");

And Whereas notice of a Public Meeting to hear comments from the affected property owners was given on Monday, January 30, 2023;

And Whereas a Public Meeting of Council was held on February, 14, 2023 at 3:30 pm to hear from any affected property owners on the Drainage Report;

And Whereas the Council of The Corporation of the Town of Tecumseh is of the opinion that the repair and improvement of the Demonte is desirable;

Now Therefore the Council of The Corporation of The Town of Tecumseh Enacts as follows:

1. **That** the Drainage Report providing for the repair and improvement of the Demonte, dated August 5, 2022, as prepared by the consulting engineering firm Dillon Engineering Limited and attached hereto as Schedule "A" to this by-law, is hereby adopted and the drainage works as therein indicated and set forth is hereby approved and shall be completed in accordance therewith.

2. **That** the Treasurer, subject to the approval of Council, may agree with any bank or person for temporary advances of money to meet the costs of construction pending the completion of the drain and grants and computed payments are received.

3. **That** the Town may issue debentures for the amount borrowed and the amount of such debentures shall be reduced to the total amount of:

    a) Grants received under Section 85 of the said Act;

    b) Commuted payments made in respect of land and roads assessed.

4. **That** such debentures shall be made payable within five (5) years from the date of the debenture and shall bear interest at a rate as approved by resolution of Council.

5. **That** the specifications and General Specifications as established are adopted as set out in the Drainage Report which forms part of this by-law.

6. **That** the Mayor and Clerk are authorized to cause a contract for the construction of the works to be made and entered into with some person or persons, firm or corporations, subject to the approval of the Council to be declared by resolution.

7. **That** this by-law shall come into force upon and after the final passing thereof.

Read a first and second time this 14th day of February, 2023.

Gary McNamara
Signed with ConsignO Cloud (2023/02/15)
Verify with verifio.com or Adobe Reader.

Gary McNamara, Mayor

Robert Auger
Signed with ConsignO Cloud (2023/02/16)
Verify with verifio.com or Adobe Reader.

Robert Auger, Clerk

Read a third and final time this 11th day of April, 2023.

Gary McNamara, Mayor

Robert Auger, Clerk

DRAINAGE REPORT
FOR THE

DEMONTE BRANCH DRAIN

TOWN OF TECUMSEH

(FINAL – COUNCIL CONSIDERATION)
5 AUGUST, 2022
MARK D. HERNANDEZ, P.ENG
FILE No. 17-5617
Tecumseh File No. E09EI(33)

DILLON CONSULTING

DILLON
CONSULTING

3200 Deziel Drive
Suite 608
Windsor, Ontario
Canada
N8W 5K8
Telephone
519.948.5000
Fax
519.948.5054

Mayor and Council
The Corporation of the Town of Tecumseh
917 Lesperance Road
Tecumseh, Ontario
N8N 1W9

Drainage Report for the

DEMONTE BRANCH DRAIN

Town of Tecumseh

Mayor and Council:

Instructions

The Municipality received a petition from the Road Authority for a legal outlet for Webster Drive dated 9 January 2017. Currently, there is an existing private drainage system on private lands which provides inadequate drainage. As the petition is signed by the Road Authority, it is valid under Section 4(1)(c) and the Municipality has authority to proceed under the Act. Council accepted the valid petition under Section 4 of the Drainage Act and on 14 March 2017 appointed Dillon Consulting Limited to prepare a report.

Area Requiring Drainage

The Demonte Branch Drain consists of an open channel commencing at Station 0+184. The drain flows easterly along the north side of a private road and outlets into the 8th Concession Drain North. We have made an examination of the area requiring drainage along Webster Drive. The area requiring drainage encompasses the lands fronting Webster Drive. The lands within the watershed primarily consist of industrial lots. The area requiring drainage is approximately 15.07 acres (11.69 hectares) in the Town of Tecumseh.

Drain History

The recent history of Engineers' reports for the Demonte Branch Drain follows:

- **3 February 2000 by Lou Zarlenga, P.Eng.:** The report established the Demonte Branch Drain as a municipal drain. The recommended work included the repair and improvement of the open drain portion including improvements to existing culverts and enclosing 65 metres with 600 mm diameter H.D.P.E. pipe at the upstream end of the drain.

On-Site Meeting

We conducted an on-site meeting on 2nd May 2017. A record of the meeting is provided in Schedule 'A', which is appended hereto.

Survey

Our survey and examination of the Demonte Branch Drain and surrounding area was carried out in June 2017. The survey comprised the recording of topographic data and examining the existing drain for available depth necessary to provide sufficient drainage. We commenced the survey at the outlet of the drain to 8th Concession Drain North. We then proceeded upstream along the channel to its head, westerly across a gravel parking lot (Roll No. 550-18600) to the west limit of Webster Drive.

Our survey revealed a significant amount of contaminated sediment in the drain.

In addition to the Demonte Branch Drain, we surveyed a portion of the 8th Concession Drain North from the outlet of the Demonte Branch Drain to the concrete box culvert on the south side of King's Highway No. 401. Our survey revealed a significant amount of vegetation with frequent accumulation of debris, forming blockages within the channel. There is a uniform buildup of sediment averaging approximately 200 mm (8 inches) above the design grade set out in the previous 2000 engineer's report which is being matched as shown on the new design profile appended herein.

Existing Conditions and Recommendations

The last report for repair and improvement of the drain was completed in 2000. The open drain portion will require a bottom cleanout to align with the 2000 design profile as shown on the drawings attached. Generally the drain banks appear to be stable but not well grassed.

Contamination of the enclosed 900 mm diameter private drain and the 600 mm diameter enclosed part of the Demonte Branch Drain had been identified by the Town and the contaminated sediment was subsequently removed by the landowner responsible. The Ministry, at that time, Ministry of the Environment and Climate Change was involved. Sampling of the water, drain banks and sediment in the open drain was completed by Dillon and the analysis found contamination in the water and sediment but not in the soil of the drain banks. These findings have been summarized under a separate memorandum.

Upstream of the Demonte Branch Drain there exists approximately 161 metre length of 900 mm diameter concrete storm pipe connected to the drain. The storm sewer was installed under an agreement dated September 9, 1982 between the owner of the upstream lands and the Husky property. The agreement provided the right for the upstream landowner to construct and maintain the enclosed drain through the Husky lands. The enclosed drain serves the drainage needs for Webster Drive and the upstream lands which have changed ownership since the 1982 agreement. It is understood that there is an orifice at the upstream end of the pipe which shall be

removed as part of this work to better facilitate drainage from the upstream lands. We recommend it be incorporated as part of the municipal drainage works and shall be named the Demonte Branch Drain.

The access bridges were inspected during the course of our investigation. These bridges provide access from a private right-of-way to the adjacent lands. Our assessment identified culverts that are in poor condition and that are still in serviceable condition, but will likely require replacement in the next 5 to 10 years. Our analysis found Bridge No. 1 and 3 will require immediate replacement. Bridge No. 2 is still in reasonable condition and we have provided specifications for future replacement.

Specific structure numbers have been designated for ease of reference between specifications and the drawings.

The locations, dimensions, condition and use of each structure are as follows:

Bridge No. 1: Station 0+010 (Roll No. 550-17800 Laval Tool & Mould Ltd.)

A 13.2 m long, 600 mm diameter corrugated steel pipe with rip rap end protection and an asphalt driveway surface provides access to this property. This culvert was shown as a 600 mm diameter CSP in the 2000 report. This culvert is deficient in hydraulic capacity and requires immediate replacement.

We recommend that the culvert be replaced with a new 16.0 m long, 1150 x 820 mm aluminized corrugated steel pipe arch complete with sloped stone end walls, filter fabric underlay and providing a minimum 7.3 m driveable top width.

Bridge No. 2: Station 0+055 (Roll No. 550-17800 Laval Tool & Mould Ltd.)

A 31.0 m long, 1150 x 820 mm corrugated steel pipe arch with rip rap end protection and an asphalt driveway surface provides access to this property. This culvert was shown as a 750 mm diameter CSP in the 2000 report. The culvert is in good condition and does not require replacement at the present time.

We recommend that in the future, the culvert be replaced with a new 35.0 m long, 1150 x 820 mm aluminized corrugated steel pipe arch complete with sloped stone end walls, filter fabric underlay and providing a minimum 28.0 m driveable top width.

Bridge No. 3: Station 0+091 (Roll No. 550-17800 Laval Tool & Mould Ltd.)

A 10.5 m long, 700 mm diameter corrugated steel pipe with rip rap end protection and an asphalt driveway surface provides access to this property. This culvert was shown as a 750 mm diameter CSP in the 2000 report. This culvert is deficient in hydraulic capacity and requires immediate replacement.

We recommend that the culvert be replaced with a new 12.5 m long, 1150 x 820 mm aluminized corrugated steel pipe arch complete with sloped stone end walls, filter fabric underlay and providing a minimum 6.1 m driveable top width.

Bridge No. 4: Station 0+205 (Roll No. 550-17900 R.J. Cyr Co. Inc.)

A 42.0 m long, 600 mm diameter HDPE complete with sloped stone end wall and asphalt driveway surface provides access to this property. This culvert is in good condition but lacks hydraulic capacity.

We recommend that the culvert be replaced with a new 65.0 m long, 1150 x 820 mm polymer laminated corrugated steel pipe arch complete with sloped stone end wall, filter fabric underlay and providing a minimum 30.0 m driveable top width.

The private existing 900 mm diameter storm sewer and manholes and the 600 mm diameter closed portion located across the Husky property (Roll No. 550-18600) were filled with water and required flushing as part of the Ministry's order to make an observation if they required replacement. A video inspection of the existing pipes found the pipes to be in good condition but were holding contaminated soils. The contaminated material was disposed of off-site by the landowner. From the video inspection, a concrete block wall was visible near Manhole No. 3. We recommend this wall be removed to provide an outlet for Webster Drive.

Based on a legal review of the agreement, it is understood that the municipality has the right to access and maintain the pipe, however, there is no mechanism to assess the costs. Adoption of this report would provide the right for drainage, access, maintenance and assessment of the associated costs.

The municipality will be undertaking the reconstruction of Webster Drive including road reconstruction, storm sewers, sanitary sewers and watermain replacement which requires a legal outlet for the proposed storm sewers. We therefore recommend the existing private tile system be incorporated under the Drainage Act and be referred to as the Demonte Branch Drain.

Design Considerations

Typically for an area such as this, a 1:5 year design storm would be applied. However, the existing open drain is shallow and very flat which limits the opportunity for increasing the slope and in turn the capacity of the system. The extent to which the work could continue downstream was reviewed and it was found that the downstream section of the 8th Concession Drain is also quite flat. In addition, there is a concrete box culvert under King's Highway No. 401 which would be cost prohibitive to replace. Given the physical restraints of the Demonte and 8th Concession Drains, a 1:2 year level of service is recommended. As redevelopment of the adjacent lands occur, private stormwater measures will be required which account for the 1:2 year level of service.

Allowances

In accordance with Sections 29, 30 and 31 of the Drainage Act, we have made a determination of the amount to be paid for lands taken for the improvements to the drain as recommended, damages to lands and crops (if any), and for the incorporation of the existing sewer. Due to the contamination identified in the sediment, all excavated materials must be trucked away to a landfill.

As such, there are no damage allowances associated with spreading of excavated material under Section 30. Further, the construction area will have to be restored to existing, or better, conditions. As such, there are no damage allowances with respect to restoration on lands by the landowners.

The Section 29 allowance for land taken for the working corridor required for the newly incorporated 900 mm diameter concrete pipe drain is based on a corridor width of 15 metres centred on the alignment of the tile. The land currently consists of an open gravel parking lot. Accordingly, the Section 29 allowance has been calculated at a rate of $25,000 per hectare.

The existing 900 mm diameter storm sewer located on the Husky property will be incorporated as part of the Demonte Branch Drain under this report. Therefore, under Section 31 of the Drainage Act an allowance of $59,990.00 will be paid for the existing storm sewer. The amount of the allowance was developed by estimating the current value of a new sewer of similar size and material and applying a depreciation based on a comparison of the life expectancy of the pipe and its current age.

A private agreement established on September 9, 1982 between landowners established the easement for construction and maintenance of the private storm sewer. Since that time, the land ownership has changed.

Cost Estimate

Based on our review of the history, the information obtained during the site meeting and our examination and analysis of the survey data, we recommend that the Demonte Branch Drain be repaired and improved as described below:

Item	Description	Amount
	DEMONTE BRANCH DRAIN-OPEN DRAIN WORK	
1.	Excavation and trucking of excavated materials works for the Demonte Branch Drain, as follows:	
	a) Excavation of the drain bottom only, as follows:	
	i) Station 0+000 to Station 0+184, totalling approximately 184 lineal metres of drain and approximately 65 m^3 of material.	$2,650.00
	b) Trucking and disposal of all excavated, contaminated materials to landfill site, as follows:	
	i) At all properties totalling approximately 65 m^3 of material. (Trucking and hauling costs only)	$2,600.00
	ii) Disposal of contaminated material off-site (approximately 130 tonnes).	$7,200.00
2.	Excavation and trucking of excavated materials works for the 8th Concession Drain North including removal and reinstallation of chain fence for access and costs for encroachment permit to work in vicinity of King's Highway No. 401, as follows:	
	a) Excavation of the drain bottom only, as follows:	
	i) Station 1+915A to Station 2+000A, totalling approximately 85 lineal metres of drain and approximately 25 m^3 of material.	$1,100.00
	b) Trucking and disposal of all excavated, contaminated materials to landfill site, as follows:	
	i) At all properties totalling approximately 25 m^3 of material. (Trucking and hauling costs only)	$1,000.00
	ii) Disposal of contaminated material off-site (approximately 50 tonnes).	$2,900.00
3.	Cable concrete drain liner, as follows:	
	a) Station 0+017 to Station 0+039 and Station 0+070 to Station 0+084 - Supply and install 230 m^2 CC35 cable concrete mats with stainless steel anchors. Contractor designed drawings required, sealed by Ontario Professional Engineer.	$32,000.00

4.	Private access bridge replacement works, as follows:	
	a) Bridge No. 1 - Station 0+010 (Roll No. 550-17800) – Removal and disposal of existing 13.2 m long 600 mm diameter CSP, existing end walls and backfill off-site that are not suitable for native backfill.	$13,650.00
	Installation of a new 16.0 m long, 1150 x 820 mm corrugated steel pipe arch (CSPA). complete with clear stone bedding up to pipe springline with filter fabric overlay (approximately 30 tonnes), full Granular 'A' backfill from springline to underside of driveway surface material (approximately 80 m^3) compacted providing a minimum 7.3 m (24 ft.) driveable top width, clean native surface layer beyond driveway (approximately 20 m^3) and sloping stone end walls with filter fabric underlay (approximately 20 m^2). All surplus native materials resulting from the culvert installation are to be trucked away to an approved dumping site at the Contractor's expense.	
	b) Bridge No. 1 – Asphalt driveway restoration. Supply and install 80 mm HL3 layer (approx. 10 tonnes) in 2 equal lifts of 40 mm thickness, compacted.	$3,500.00
	c) Bridge No. 3 – Station 0+091 (Roll No. 550-17800) – Removal and disposal of existing 10.5 m long 700 mm diameter CSP, existing end walls and backfill off-site that are not suitable for native backfill. Supply and installation of a new 12.5 m long, 1150 x 820 mm corrugated steel pipe arch (CSPA). complete with clear stone bedding up to pipe springline with filter fabric overlay (approximately 25 tonnes), full Granular 'A' backfill from springline to underside of driveway surface material (approximately 60 m^3) compacted providing a minimum 6.1 m (20 ft.) driveable top width, clean native surface layer beyond driveway (approximately 20 m^3) and sloping stone end walls with filter fabric underlay (approximately 20 m^2). All surplus native materials resulting from the culvert installation are to be trucked away to an approved dumping site at the Contractor's expense.	$13,300.00
	d) Bridge No. 3 – Asphalt driveway restoration. Supply and install 80 mm HL3 layer (approx. 10 tonnes) in 2 equal lifts of 40 mm thickness, compacted.	$3,500.00
	e) Bridge No. 4 – Station 0+216 (Roll No. 550-17900) – Removal and disposal of existing 42.0 m long 600 mm diameter HDPE, existing end walls and backfill off-site that are not suitable for native backfill. Supply and installation of a new 65.0 m long, 1150 x 820 mm polymer laminated corrugated steel pipe arch (CSPA). complete with clear stone bedding up to pipe	$51,350.00

	springline with filter fabric overlay (approximately 110 tonnes), full Granular 'A' backfill from springline to underside of driveway surface material (approximately 320 m^3) compacted providing a minimum 30.0 m (98 ft.) driveable top width, clean native surface layer beyond driveway (approximately 20 m^3) and sloping stone end walls with filter fabric underlay (approximately 15 m^2). All surplus native materials resulting from the culvert installation are to be trucked away to an approved dumping site at the Contractor's expense.	
	f) Bridge No. 4 – Asphalt driveway restoration. Supply and install 80 mm HL3 layer (approx. 65 tonnes) in 2 equal lifts of 40 mm thickness, compacted.	$22,200.00
5.	Access bridge cleaning works, as follows:	
	a) Bridge No. 2-Roll No. 550-17800 – Clean existing 1150 x 820 mm CSPA bridge (31 m long).	$1,900.00
6.	Temporary Silt Control Measures During Construction	$900.00
SUB-TOTAL		**$159,750.00**
7.	Survey, Report, Assessment and Final Inspection (cost portion)	$32,250.00
8.	Expenses and incidentals (cost portion)	$3,000.00
9.	Environmental field services, sampling, analysis and reporting (cost portion)	$4,900.00
10.	ERCA application review and permit fee	$800.00
TOTAL ESTIMATE – DEMONTE BRANCH DRAIN		**$200,700.00**

SECTION 26 NON PRO-RATABLE COSTS		
11.	Road bridge cleaning works, as follows:	
	a) Cleaning of existing 1520 mm x 1220 mm box culvert, 55 m long under King's Highway No. 401. Work shall include disposal of materials off-site and all costs to obtain MTO permits.	$16,000.00
SUB-TOTAL SECTION 26 NON PRO-RATABLE COSTS		$16,000.00
12.	Engineering cost apportionment	$1,000.00
TOTAL SECTION 26 NON PRO-RATABLE COSTS		$17,000.00

TOTAL ESTIMATE – DEMONTE BRANCH DRAIN	**$217,700.00**

DEMONTE BRANCH DRAIN (CLOSED DRAIN)		
1.	Remove existing concrete block wall inside existing MH3.	$1,000.00
SUB-TOTAL		**$1,000.00**
2.	Allowances under Section 29 and 31	$65,990.00
3.	Survey, Report, Assessment and Final Inspection (cost portion)	$15,650.00
4.	Expenses and incidentals (cost portion)	$1,500.00
5.	Environmental field services, sampling, analysis and reporting (cost portion)	$10,000.00
TOTAL DEMONTE BRANCH DRAIN (CLOSED DRAIN)		**$94,140.00**

OVERALL TOTAL ESTIMATE DEMONTE BRANCH DRAIN	**$311,840.00**

The estimate provided in this report was prepared according to current materials and installation prices as of the date of this report. In the event of delays from the time of filing of the report by the Engineer to the time of tendering the work, it is understood that the estimate of cost is subject to inflation. The rate of inflation shall be calculated using the Consumer Price Index applied to the cost of construction from the date of the report to the date of tendering.

Assessment of Costs

The individual assessments are comprised of three (3) assessment components:

i. *Benefit (advantages relating to the betterment of lands, roads, buildings, or other structures resulting from the improvement to the drain).*
ii. *Outlet Liability (part of cost required to provide outlet for lands and roads).*
iii. *Special Benefit (additional work or feature that may not affect function of the drain).*

Assessment Rationale – Open Drain Improvements

We have assessed the above estimated costs for the repair and improvement of the Demonte Branch Drain and the 8th Concession Drain North (Station 1+915A to Station 2+000A) against the affected lands and roads listed in Schedule "C-1" under "Benefit" and "Outlet Liability" or Special Benefit assessments shown in Schedule "C-1" are detailed in Schedule "D-1." Assessments were derived as follows:

1. The above estimated costs have been assessed 60% as a Benefit assessment and 40% as an Outlet Liability assessment against all upstream lands and roads within the drainage area.

2. Any costs associated with an Encroachment permit for work done on the 8th Concession Drain shall be assessed 100% to the Ministry of Transportation under Section 26 of the Drainage Act.
3. Costs associated with the cable concrete liner shall be assessed against the abutting properties, 50% to Laval Tool Mould Ltd. (Roll No. 550-17800) and 50% to 679637 Ontario Ltd. (Roll No. 550-18000).

Assessment Rationale for Special Benefit Assessments (Bridges)

Special Benefit assessment shown in Schedule 'C-1' and detailed in Schedule 'D-1' were derived as follows:

1. Bridge replacement costs for Bridge No. 1 (Primary) assessed 50% to abutting property Roll No. 550-17800. The remaining 50% is assessed to upstream lands within the Demonte Branch Drain watershed. The assessment shall be a pro-ratable assessment.
2. An engineering cost portion of $2,500.00 for the design provisions on the future replacement of Bridge No. 2 (Secondary) has been assessed 100% against the abutting property (Roll No. 550-17800). The assessment shall be a pro-ratable assessment.
3. Bridge replacement costs for Bridge No. 3 (Secondary) assessed 100% to abutting property Roll No. 550-17800. The assessment shall be a pro-ratable assessment.
4. Bridge replacement costs for Bridge No. 4 (Primary) assessed 50% to abutting property Roll No. 550-17900. The remaining 50% is assessed to upstream lands within the Demonte Branch Drain watershed. The assessment shall be a pro-ratable assessment.
5. Increased costs to provide asphalt and concrete driveway surfaces have been assessed 100% against the adjacent landowner. The assessment shall be a non-proratable assessment.
4. Bridge cleaning costs for Highway 401 bridge has been assessed 100% to the Ministry of Transportation Ontario. The assessments shall be a non-proratable assessment.

Assessment Rationale-Demonte Branch Drain (Closed Drain)

We have assessed the above estimated costs for the repair and improvement of the closed portion of the Demonte Branch Drain against the affected lands and roads listed in Schedule "C-2" under "Benefit" and "Outlet Liability" and detailed in Schedule "D-2."

The costs of the Section 31 allowances shall be assessed as a Special Benefit to the lots within the Webster Drive subdivision in equal proportions. The assessments shall be a non-proratable assessment.

Utilities

It may become necessary to temporarily or permanently relocate utilities that may conflict with the construction recommended under this report. In accordance with Section 26 of the Drainage Act, we assess any relocation cost against the public utility having jurisdiction.

Under Section 69 of the Drainage Act, the public utility is at liberty to do the work with its own forces, but if it should not exercise this option within a reasonable time, the Municipality will arrange to have this work completed and the costs will be charged to the appropriate public utility.

Future Maintenance (Demonte Branch Drain) (Open Drain)

After completion, the Demonte Branch Drain shall be maintained by the Town of Tecumseh at the expense of the lands and road herein assessed in Schedule E-1," and in the same relative proportions subject, of course, to any variations that may be made under the authority of the Drainage Act. The portion of the 8th Concession Drain North (Station 1+915A to Station 2+000A) shall be maintained by the Town of Tecumseh under this report at the expense of the lands and road herein assessed in Schedule E-1," and in the same relative proportions subject, of course, to any variations that may be made under the authority of the Drainage Act. The assessments are based on an arbitrary amount of $10,000.00.Tile inlet repairs and stone erosion protection shall be assessed 100% against the property on which the tile or surface water inlet serves.

Future Maintenance (Demonte Branch Drain) (Closed Drain)

The Demonte Branch Drain shall be maintained by the Town of Tecumseh at the expense of the lands and road herein assessed in Schedule E-2," and in the same relative proportions subject, of course, to any variations that may be made under the authority of the Drainage Act. The assessments are based on an arbitrary amount of $10,000.00.

Future Maintenance (Private Access Bridges)

We recommend that future work of repair and maintenance of the Demonte Branch Drain private access bridges be carried out by the Town of Tecumseh at the expense of the property or properties accessed by the bridge and of the lands and roads shown in Schedule "E-3", but only to those properties located upstream of each bridge.

Part of the maintenance cost of each bridge will be assessed as a Special Benefit assessment against the property or properties served by the bridge.

The remainder of the maintenance cost will be assessed as Outlet assessment only to the lands and roads upstream of each bridge prorated to the assessments shown in Schedule "E-3."

Schedule "E-3" represents all the lands and roads upstream of Bridge No. 1 and is applicable to other primary access bridges located further upstream by including only those properties that are upstream of the said bridge. The assessment is based on an arbitrary amount of $10,000.00 of future access bridge maintenance costs.

The division between Special Benefit and Outlet assessment for each bridge shall be as follows:

Bridge No.	Type	Owner(s)	Special Benefit	Outlet
1	Primary	Roll No. 550-17800	50%	50%
2	Secondary	Roll No. 550-17800	100%	0%
3	Secondary	Roll No. 550-17800	100%	0%
4	Primary	Roll No. 550-17900	50%	50%

Drawings and Specifications

Attached to this report is Schedule 'F', which are Specifications setting out the details of the recommended works and Schedule 'G' which represent the drawings that are attached to this report.

Page 1 of 5 - Watershed Plan
Page 2 of 5 - Detail Plan
Page 3 of 5 - Profile
Page 4 of 5 - Cross Sections & Details
Page 5 of 5 - Bridge Details

Approvals

The construction and/or improvement to a drainage works, including repair and maintenance activities, and all operations connected therewith are subject to the approval, inspection, by-laws and regulations of all Municipal, Provincial, Federal and other authorities having jurisdiction in respect to any matters embraced by the proposed works. Prior to any construction or maintenance works, the Municipality or proponent designated on the Municipality's behalf shall obtain all required approvals/permits and confirm any construction limitations including timing windows, mitigation/off-setting measures, standard practices or any other limitations related to in-stream works.

Grants

In accordance with the provisions of Sections 85, 86 and 87 of the Drainage Act, a grant in the amount of 33–1/3 percent of the assessment eligible for a grant may be made in respect to the assessment made under this report upon privately owned lands used for agricultural purposes. The assessments levied against privately owned agricultural land must also satisfy all other eligibility criteria set out in the Agricultural Drainage Infrastructure Program policies. We understand that there are no agricultural lands and therefore no grants are anticipated.

Respectfully submitted,

DILLON CONSULTING LIMITED

Mark D. Hernandez, P.Eng.

MDH:wlb:mc

File No. 17-5617

TOWN OF Tecumseh ONTARIO · CANADA

2017 Petition Webster Drive (8th Conc Drain & Demonte Branch)

SIGN IN SHEET - ON-SITE MEETING

May 2, 2017

NAME	ADDRESS	PHONE	EMAIL
Phil Bartnik	TOWN		
Stephanie Kiritsis	Town		
GERRY CHAUVIN	TEC	519-566 8714	
SAM PAGLIA	TOWN	519-735-2184	
Mark Hernandez	Dillon	519 948 5800	
DANNY VUJOVIC	ECH	519-796-6206	

MEETING MINUTES

DILLON CONSULTING

Subject: Petition Drain-Webster Drive
Date and Time: May 2, 2017
Location: 3800 Webster Drive
Our File: 17-5617

Attendees

Phil Bartnik	Town of Tecumseh
Stephanie Kiritsis	Town of Tecumseh
Gerry Chauvin	Town of Tecumseh
Sam Paglia	Town of Tecumseh
Mark Hernandez	Dillon Consulting
Danny Vujdic	ECM

Notes

Item	Discussion	Action By
1.	Need to take samples from existing Demonte	
1.1.	• Likely contaminated. • Call Ministry of Environment if required. • If single source is confirmed then the landowner pays. If not, it would be a drain cost	
2.	Section 4 petition	
2.1.	Existing private drain from Station 0+252 to right-of-way. The condition is unknown at this time and needs to be located. Discussion with Husky may be required.	
2.2.	The Town intends to reconstruct Webster Drive and requires a formal outlet for the right-of-way.	
3.	Stormwater Management concerns	
3.1.	It was discussed that the industrial area along Webster Drive has issues with stormwater management. It was discussed that in one case, stormwater flows overland through the building. It was discussed that at some point each property will require stormwater measures for quantity and quality control.	

4. Survey

4.1. A survey will have to be completed to determine sufficient outlet. It was discussed that the survey should start at the culvert under Hwy 401. It was discussed that there may be limited grade available in the existing drains to improve the system.

5. Drain Name

5.1. Naming will have to be considered, ie. Branch drain extension

6. Drainage Act Process

- Survey
- Report Preparation
- PIC Meeting (Public Information Centre)
- Meeting to Consider
- Court of Revision

Errors and/or Omissions

These minutes were prepared by Mark Hernandez who should be notified of any errors and/or omissions.

Meeting Minutes

DILLON CONSULTING

Subject: Demonte Drain

Date: November 5, 2021

Location: In front of Quick Draw Tarpaulin Systems

Our File: 17-5617

Attendees

Sam Paglia	Town of Tecumseh
Walt Demonte	Landowner
Mark Hernandez	Dillon Consulting Limited

Notes

Item	Discussion	Action
1.	A summary of the meeting is as follows: • The Town received a request from RJ Cyr for an additional access to their property as part of their site development. • Mr. Demonte indicated that no one from RJ Cyr spoke with him about the request. • A temporary culvert had been installed by a contractor for RJ Cyr which was subsequently removed at the direction of the Town. • Mr. Demonte indicated that the private roadway is congested and that the additional access would worsen the situation for Mr. Demonte. Mr. Demonte owns the private roadway. • Mr. Demonte confirmed he would not support, and would appeal the report if it were to proceed with the culvert requested by RJ Cyr. • It was discussed that RJ Cyr has the right to request the culvert, but that request is subject to approvals in addition to the Drainage Act process, including ERCA and Road Authority approvals. This is no different than requests on other municipal drains. • It was discussed that RJ Cyr would be notified that Mr. Demonte is not in agreement and so the report cannot proceed with the requested culvert. • It was discussed that the additional culvert requested by RJ Cyr could be contained within its own report at a later date. Agreement from Mr. Demonte would still be required.	

Item	Discussion	Action
	• It was discussed that other landowners require the balance of the work contained within the draft report to proceed and it is undesirable to delay the works.	

Errors and/or Omissions

These minutes were prepared by Mark Hernandez, P.Eng. who should be notified of any errors and/or omissions.

Meeting Minutes

DILLON CONSULTING

Subject: Demonte Drain

Date: December 16, 2021

Location: Virtual Meeting

Our File: 17-5617

Attendees

Sam Paglia	Town of Tecumseh
John Henderson	Town of Tecumseh
David Meade	Windsor Industrial Services
Nick Rosati	Rosati Group
Denis Gauthier	Rosati Group
Mark Hernandez	Dillon Consulting Limited

Notes

Item	Discussion	Action
1.	A summary of the meeting is as follows: • A meeting was held with Mr. Demonte on November 5, 2021. • Mr. Demonte indicated that no one from RJ Cyr spoke with him about the request for a new culvert / access. Mr. Demonte owns the private roadway. • Mr. Demonte had indicated that the private roadway is congested and that the additional access would worsen the situation for Mr. Demonte. • Mr. Demonte confirmed he would not support, and would appeal the report if it were to proceed with the culvert requested by RJ Cyr. • It was discussed that RJ Cyr has the right to request the culvert, but that request is subject to approvals in addition to the Drainage Act process, including ERCA and Road Authority approvals. This is no different than requests on other municipal drains. • As Mr. Demonte is not in agreement the report cannot proceed with the requested culvert. • It was discussed that the additional culvert requested by RJ Cyr could be contained within its own report at a later date. Agreement from Mr. Demonte would still be required.	

Item	Discussion	Action
	It is understood that RJ Cyr will be reviewing their legal agreements to understand what right of access they currently have. • It was discussed that other landowners require the balance of the work contained within the draft report to proceed and it is undesirable to delay the works. • Mr. Meade confirmed that they would not pursue the additional access further at this time and that this would be confirmed in writing.	

Errors and/or Omissions

These minutes were prepared by Mark Hernandez, P.Eng. who should be notified of any errors and/or omissions.

"SCHEDULE B"
SCHEDULE OF ALLOWANCES
DEMONTE BRANCH DRAIN
TOWN OF TECUMSEH

Roll No.	Con.	Description	Owner	Section 31	Section 30 Damages	Section 29 Land	Total Allowances
550-18600	7	Pt. Lot 13 RP12R2282 Pts. 2-7 Pts 10&13	Husky Oil Ltd.	$8,570.00	$0.00	$6,000.00	$14,570.00
550-18615	7	Pt. Lot 13 RP12R8957 Pts. 1&20	Bensav Real Estate Inc.	$8,570.00	$0.00	$0.00	$8,570.00
550-18614	7	Pt. Lot 13 RP12R8957 Pts. 2&19	1871418 Ontario Inc.	$8,570.00	$0.00	$0.00	$8,570.00
550-18612	7	Pt. Lot 13 RP12R8957 Pts. 3&18	Bensav Real Estate Inc.	$8,570.00	$0.00	$0.00	$8,570.00
550-18610	7	Pt. Lot 13 RP12R8957 Pt. Pts. 4&17	Ministry of Transportation Ontario	$8,570.00	$0.00	$0.00	$8,570.00
550-02601	7	Pt. Lot 13 RP12R8957 Pts. 14-16	Toromont Industries Ltd.	$8,570.00	$0.00	$0.00	$8,570.00
550-18602	7	Pt. Lot 13 RP12R8957 Pts. 8-13	Barnum Property Holders Inc.	$8,570.00	$0.00	$0.00	$8,570.00
TOTAL ALLOWANCES				**$59,990.00**	**$0.00**	**$6,000.00**	**$65,990.00**

"SCHEDULE C-1"
SCHEDULE OF ASSESSMENT
DEMONTE BRANCH DRAIN
TOWN OF TECUMSEH
(Page 1 of 2)

ONTARIO LANDS:

Roll No.	Con.	Description	Area Affected (Acres)	Area Affected (Ha.)	Owner	Special Benefit	Benefit	Outlet	Total Assessment
550-18610	7	Pt. Lot 13 RP12R8957 Pts. 4&17	2.81	1.14	Ministry of Transportation Ontario	$0.00	$393.00	$3,578.00	$3,971.00
Total on Ontario Lands						$0.00	$393.00	$3,578.00	$3,971.00

MUNICIPAL LANDS:

Description	Area Affected (Acres)	Area Affected (Ha.)	Owner	Special Benefit	Benefit	Outlet	Total Assessment
Webster Drive	1.68	0.68	Town of Tecumseh	$0.00	$391.00	$3,555.00	$3,946.00
Total on Municipal Lands				$0.00	$391.00	$3,555.00	$3,946.00

PRIVATELY-OWNED - NON-AGRICULTURAL LANDS:

Roll No.	Con.	Description	Area Affected (Acres)	Area Affected (Ha.)	Owner	Special Benefit	Benefit	Outlet	Total Assessment
550-18615	7	Pt. Lot 13 RP12R8957 Pts. 1&20	2.90	1.17	Bensav Real Estate Inc.	$0.00	$477.00	$4,333.00	$4,810.00
550-18614	7	Pt. Lot 13 RP12R8957 Pts. 2&19	1.07	0.43	1871418 Ontario Inc.	$0.00	$149.00	$1,350.00	$1,499.00
550-18612	7	Pt. Lot 13 RP12R8957 Pts. 3&18	1.14	0.46	Bensav Real Estate Inc.	$0.00	$176.00	$1,598.00	$1,774.00
550-02601	7	Pt. Lot 13	2.47	1.00	Toromont Industries Ltd.	$0.00	$395.00	$3,588.00	$3,983.00
550-18602	7	Pt. Lot 13 RP12R8957 Pts. 8&13	3.00	1.21	Barnim Property Holdings Inc.	$0.00	$415.00	$3,772.00	$4,187.00
550-18600	7	Pt. Lot 13 RP12R2282 Pts. 2-7, Pts. 10&13	16.65	6.74	Husky Oil Ltd.	$0.00	$5,338.00	$27,218.00	$32,556.00
550-17900	7	Pt. Lot 13	5.05	2.04	R.J. Cyr. Co. Inc.	$31,031.00	$2,212.00	$2,438.00	$35,681.00
550-17800	7	S Pt. Lot 13	0.91	0.37	Laval Tool & Mould Ltd.	$47,656.00	$1,113.00	$536.00	$49,305.00
550-18000	7	Pt. Lots 12 & 13 RP12R2282 Pts. 8,9,11,12,14&15	1.11	0.45	679637 Ontario Ltd.	$20,000.00	$1,917.00	$571.00	$22,488.00
Total on Privately-Owned - Non-Agricultural Lands						$98,687.00	$12,192.00	$45,404.00	$156,283.00
TOTAL ASSESSMENT (Excl. Non-Proratable Assessments)						**$98,687.00**	**$12,976.00**	**$52,537.00**	**$164,200.00**

"SCHEDULE C-1"
SCHEDULE OF ASSESSMENT
DEMONTE BRANCH DRAIN
TOWN OF TECUMSEH
(Page 2 of 2)

PRIVATELY-OWNED - NON-AGRICULTURAL LANDS (NON-PRORATABLE):

Roll No.	Con.	Description	Area Affected (Acres)	Area Affected (Ha.)	Owner	Special Benefit	Benefit	Outlet	Total Assessment
550-17800	7	S Pt. Lot 13	0.00	0.00	Laval Tool & Mould Ltd.	$8,750.00	$0.00	$0.00	$8,750.00
550-17900	7	Pt. Lot 13	0.00	0.00	R.J. Cyr. Co. Inc.	$27,750.00	$0.00	$0.00	$27,750.00
Total on Privately-Owned - Non-Agricultural Lands (Non Pro-ratable).....						$36,500.00	$0.00	$0.00	$36,500.00

SECTION 26 INCREASED COSTS - NON PRO-RATABLE:

Roll No.	Con.	Description	Area Affected (Acres)	Area Affected (Ha.)	Owner	Special Benefit	Benefit	Outlet	Total Assessment
Kin'g's Highway No. 401					Ministry of Transportation Ontario	$17,000.00	$0.00	$0.00	$17,000.00
Total Section 26 Increased Costs (Non Pro-ratable).....						$17,000.00	$0.00	$0.00	$17,000.00

TOTAL ASSESSMENT. $217,700.00

	(Acres)	(Ha.)
Total Area:	**38.79**	**15.69**

"SCHEDULE C-2"
SCHEDULE OF ASSESSMENT
DEMONTE BRANCH DRAIN (CLOSED DRAIN)
TOWN OF TECUMSEH

ONTARIO LANDS:

Roll No.	Con.	Description	Area Affected (Acres)	Area Affected (Ha.)	Owner	Special Benefit	Benefit	Outlet	Total Assessment
550-18610	7	Pt. Lot 13 RP12R8957 Pts. 4&17	2.81	1.14	Ministry of Transportation Ontario	$8,570.00	$123.00	$822.00	$9,515.00
Total on Ontario Lands						$8,570.00	$123.00	$822.00	$9,515.00

MUNICIPAL LANDS:

Roll No.	Con.	Description	Area Affected (Acres)	Area Affected (Ha.)	Owner	Special Benefit	Benefit	Outlet	Total Assessment
Webster Drive			1.68	0.68	Town of Tecumseh	$0.00	$123.00	$818.00	$941.00
Total on Municipal Lands						$0.00	$123.00	$818.00	$941.00

PRIVATELY-OWNED - NON-AGRICULTURAL LANDS:

Roll No.	Con.	Description	Area Affected (Acres)	Area Affected (Ha.)	Owner	Special Benefit	Benefit	Outlet	Total Assessment
550-18615	7	Pt. Lot 13 RP12R8957 Pts. 1&20	2.90	1.17	Bensav Real Estate Inc.	$8,570.00	$149.00	$996.00	$9,715.00
550-18614	7	Pt. Lot 13 RP12R8957 Pts. 2&19	1.07	0.43	1871418 Ontario Inc.	$8,570.00	$47.00	$310.00	$8,927.00
550-18612	7	Pt. Lot 13 RP12R8957 Pts. 3&18	1.14	0.46	Bensav Real Estate Inc.	$8,570.00	$55.00	$367.00	$8,992.00
550-02601	7	Pt. Lot 13	2.47	1.00	Toromont Industries Ltd.	$8,570.00	$124.00	$825.00	$9,519.00
550-18602	7	Pt. Lot 13 RP12R8957 Pts. 8&13	3.00	1.21	Barnim Property Holdings Inc.	$8,570.00	$130.00	$867.00	$9,567.00
550-18600	7	Pt. Lot 13 RP12R2282 Pts. 2-7, Pts. 10&13	16.65	6.74	Husky Oil Ltd.	$14,570.00	$16,139.00	$6,255.00	$36,964.00
Total on Privately-Owned - Non-Agricultural Lands						$57,420.00	$16,644.00	$9,620.00	$83,684.00
TOTAL ASSESSMENT						**$65,990.00**	**$16,890.00**	**$11,260.00**	**$94,140.00**

	(Acres)	(Ha.)
Total Area:	**31.72**	**12.83**

"SCHEDULE D-1"
DETAILS OF SPECIAL BENEFIT
DEMONTE BRANCH DRAIN (OPEN DRAIN)
TOWN OF TECUMSEH

SPECIAL BENEFIT ASSESSMENT
(GENERAL DESCRIPTION OF SPECIAL BENEFIT)

Roll No.	Owner	Item Description	Estimated Cost	Cost of Report	Special Benefit
550-17800	Laval Tool & Mould Ltd.	Bridge No. 1-Sta. 0+010 (Primary 50%)	$6,825.00	$1,706.00	$8,531.00
550-17800	Laval Tool & Mould Ltd.	Bridge No. 2-Sta. 0+055 (Secondary 100%)	$0.00	$2,500.00	$2,500.00
550-17800	Laval Tool & Mould Ltd.	Bridge No. 3-Sta. 0+091 (Secondary 100%)	$13,300.00	$3,325.00	$16,625.00
550-17800	Laval Tool & Mould Ltd.	Cable Concrete Drain Liner (50%)	$16,000.00	$4,000.00	$20,000.00
		Total Roll No. 550-17800	$36,125.00	$11,531.00	$47,656.00
550-17900	R.J. Cyr Co. Inc.	Bridge No. 4-Sta. 0+205 (Primary 50%)	$24,825.00	$6,206.00	$31,031.00
550-18000	679637 Ontario Ltd.	Cable Concrete Drain Liner (50%)	$16,000.00	$4,000.00	$20,000.00
Total Special Benefit Assessment (Pro-ratable)……			**$76,950.00**	**$21,737.00**	**$98,687.00**

NON PRO-RATABLE COSTS

Roll No.	Owner	Item Description	Estimated Cost	Cost of Report	Special Benefit
550-17800	Laval Tool & Mould Ltd.	Bridge No. 1-Asphalt driveway surface (100%)	$3,500.00	$875.00	$4,375.00
550-17800	Laval Tool & Mould Ltd.	Bridge No. 3-Asphalt driveway surface (100%)	$3,500.00	$875.00	$4,375.00
		Total Roll No. 550-17800	$7,000.00	$1,750.00	$8,750.00
550-17900	R.J. Cyr Co. Inc.	Bridge No. 4-Asphalt driveway surface (100%)	$22,200.00	$5,550.00	$27,750.00
Total Special Benefit Assessment (Non Pro-ratable)……			**$29,200.00**	**$7,300.00**	**$36,500.00**

SECTION 26 (NON PRO-RATABLE COSTS)

Roll No.	Owner	Item Description	Estimated Cost	Cost of Report	Special Benefit
King's Highway No. 401	Ministry of Transportation	Clean ex. 1520 mm x 1220 mm concrete box culvert, 55 m long.	$16,000.00	$1,000.00	$17,000.00
Total Special Benefit Assessment (Section 26 Non Pro-ratable)……			**$16,000.00**	**$1,000.00**	**$17,000.00**

Overall Total Special Benefit Assessment…… **$152,187.00**

"SCHEDULE D-2"
DETAILS OF SPECIAL BENEFIT
DEMONTE BRANCH DRAIN (CLOSED DRAIN)
TOWN OF TECUMSEH

SPECIAL BENEFIT ASSESSMENT
(GENERAL DESCRIPTION OF SPECIAL BENEFIT)

Roll No.	Owner	Item Description	Estimated Cost	Cost of Report	Special Benefit
550-18600	Husky Oil Ltd.	Section 29 & 31 Allowances	$14,570.00	$0.00	$14,570.00
550-18615	Bensav Real Estate Inc.	Section 31 Allowances	$8,570.00	$0.00	$8,570.00
550-18614	1871418 Ontario Inc.	Section 31 Allowances	$8,570.00	$0.00	$8,570.00
550-18612	Bensav Real Estate Inc.	Section 31 Allowances	$8,570.00	$0.00	$8,570.00
550-18610	Ministry of Transportation Ontario	Section 31 Allowances	$8,570.00	$0.00	$8,570.00
550-02601	Toromont Industries Ltd.	Section 31 Allowances	$8,570.00	$0.00	$8,570.00
550-18602	Barnum Property Holdings Inc.	Section 31 Allowances	$8,570.00	$0.00	$8,570.00
Total Special Benefit Assessment (Non Pro-ratable)……..……			**$65,990.00**	**$0.00**	**$65,990.00**

"SCHEDULE E-1"
SCHEDULE OF ASSESSMENT FOR FUTURE MAINTENANCE
DEMONTE BRANCH DRAIN (OPEN DRAIN)
TOWN OF TECUMSEH

ONTARIO LANDS:

Roll No.	Con.	Description	Area Affected (Acres)	(Ha.)	Owner	Special Benefit	Benefit	Outlet	Total Assessment
550-18610	7	Pt. Lot 13 RP12R8957 Pts. 4&17	2.81	1.14	Ministry of Transportation Ontario	$0.00	$46.00	$538.00	$584.00
Total on Ontario Lands						$0.00	$46.00	$538.00	$584.00

MUNICIPAL LANDS:

Description	Area Affected (Acres)	(Ha.)	Owner	Special Benefit	Benefit	Outlet	Total Assessment
Webster Drive	1.68	0.68	Town of Tecumseh	$0.00	$44.00	$536.00	$580.00
Total on Municipal Lands				$0.00	$44.00	$536.00	$580.00

PRIVATELY-OWNED - NON-AGRICULTURAL LANDS:

Roll No.	Con.	Description	Area Affected (Acres)	(Ha.)	Owner	Special Benefit	Benefit	Outlet	Total Assessment
550-18615	7	Pt. Lot 13 RP12R8957 Pts. 1&20	2.90	1.17	Bensav Real Estate Inc.	$0.00	$55.00	$653.00	$708.00
550-18614	7	Pt. Lot 13 RP12R8957 Pts. 2&19	1.07	0.43	1871418 Ontario Inc.	$0.00	$17.00	$203.00	$220.00
550-18612	7	Pt. Lot 13 RP12R8957 Pts. 3&18	1.14	0.46	Bensav Real Estate Inc.	$0.00	$20.00	$241.00	$261.00
550-02601	7	Pt. Lot 13	2.47	1.00	Toromont Industries Ltd.	$0.00	$46.00	$540.00	$586.00
550-18602	7	Pt. Lot 13 RP12R8957 Pts. 8&13	3.00	1.21	Barnim Property Holdings Inc.	$0.00	$48.00	$568.00	$616.00
550-18600	7	Pt. Lot 13 RP12R2282 Pts. 2-7, Pts. 10&13	16.65	6.74	Husky Oil Ltd.	$0.00	$617.00	$4,099.00	$4,716.00
550-17900	7	Pt. Lot 13	5.05	2.04	R.J. Cyr. Co. Inc.	$0.00	$256.00	$751.00	$1,007.00
550-17800	7	S Pt. Lot 13	0.91	0.37	Laval Tool & Mould Ltd.	$0.00	$129.00	$173.00	$302.00
550-18000	7	Pt. Lots 12 & 13 RP 12R2282 Parts 8 9 11 12 14 and 15	1.11	0.45	679637 Ontario Ltd.	$0.00	$222.00	$198.00	$420.00
Total on Privately-Owned - Non-Agricultural Lands						$0.00	$1,410.00	$7,426.00	$8,836.00
TOTAL ASSESSMENT						**$0.00**	**$1,500.00**	**$8,500.00**	**$10,000.00**

	(Acres)	(Ha.)
Total Area:	**38.79**	**15.69**

"SCHEDULE E-2"
SCHEDULE OF ASSESSMENT FOR FUTURE MAINTENANCE
DEMONTE BRANCH DRAIN (CLOSED DRAIN)
TOWN OF TECUMSEH

ONTARIO LANDS:

Roll No.	Con.	Description	Area Affected (Acres)	Area Affected (Ha.)	Owner	Special Benefit	Benefit	Outlet	Total Assessment
550-18610	7	Pt. Lot 13 RP12R8957 Pts. 4&17	2.81	1.14	Ministry of Transportation Ontario	$0.00	$44.00	$292.00	$336.00
Total on Ontario Lands						$0.00	$44.00	$292.00	$336.00

MUNICIPAL LANDS:

Roll No.	Con.	Description	Area Affected (Acres)	Area Affected (Ha.)	Owner	Special Benefit	Benefit	Outlet	Total Assessment
Webster Drive			1.68	0.68	Town of Tecumseh	$0.00	$43.00	$291.00	$334.00
Total on Municipal Lands						$0.00	$43.00	$291.00	$334.00

PRIVATELY-OWNED - NON-AGRICULTURAL LANDS:

Roll No.	Con.	Description	Area Affected (Acres)	Area Affected (Ha.)	Owner	Special Benefit	Benefit	Outlet	Total Assessment
550-18615	7	Pt. Lot 13 RP12R8957 Pts. 1&20	2.90	1.17	Bensav Real Estate Inc.	$0.00	$53.00	$354.00	$407.00
550-18614	7	Pt. Lot 13 RP12R8957 Pts. 2&19	1.07	0.43	1871418 Ontario Inc.	$0.00	$17.00	$110.00	$127.00
550-18612	7	Pt. Lot 13 RP12R8957 Pts. 3&18	1.14	0.46	Bensav Real Estate Inc.	$0.00	$20.00	$130.00	$150.00
550-02601	7	Pt. Lot 13	2.47	1.00	Toromont Industries Ltd.	$0.00	$44.00	$293.00	$337.00
550-18602	7	Pt. Lot 13 RP12R8957 Pts. 8&13	3.00	1.21	Barnim Property Holdings Inc.	$0.00	$46.00	$308.00	$354.00
550-18600	7	Pt. Lot 13 RP12R2282 Pts. 2-7, Pts. 10&13	16.65	6.74	Husky Oil Ltd.	$0.00	$5,733.00	$2,222.00	$7,955.00
Total on Privately-Owned - Non-Agricultural Lands						$0.00	$5,913.00	$3,417.00	$9,330.00
TOTAL ASSESSMENT						**$0.00**	**$6,000.00**	**$4,000.00**	**$10,000.00**

	(Acres)	(Ha.)
Total Area:	**31.72**	**12.83**

"SCHEDULE E-2"
SCHEDULE OF ASSESSMENT FOR FUTURE MAINTENANCE
DEMONTE BRANCH DRAIN EXTENSION
TOWN OF TECUMSEH

ONTARIO LANDS:

Roll No.	Con.	Description	Area Affected (Acres)	Area Affected (Ha.)	Owner	Special Benefit	Benefit	Outlet	Total Assessment
550-18610	7	Pt. Lot 13 RP12R8957 Pts. 4&17	2.81	1.14	Ministry of Transportation	$0.00	$46.00	$538.00	$584.00
Total on Ontario Lands						$0.00	$46.00	$538.00	$584.00

MUNICIPAL LANDS:

Description	Area Affected (Acres)	Area Affected (Ha.)	Owner	Special Benefit	Benefit	Outlet	Total Assessment
Webster Drive	1.68	0.68	Town of Tecumseh	$0.00	$44.00	$536.00	$580.00
Total on Municipal Lands				$0.00	$44.00	$536.00	$580.00

PRIVATELY-OWNED - NON-AGRICULTURAL LANDS:

Roll No.	Con.	Description	Area Affected (Acres)	Area Affected (Ha.)	Owner	Special Benefit	Benefit	Outlet	Total Assessment
550-18615	7	Pt. Lot 13 RP12R8957 Pts. 1&20	2.90	1.17	Bensav Real Estate Inc.	$0.00	$55.00	$653.00	$708.00
550-18614	7	Pt. Lot 13 RP12R8957 Pts. 2&19	1.07	0.43	1871418 Ontario Inc.	$0.00	$17.00	$203.00	$220.00
550-18612	7	Pt. Lot 13 RP12R8957 Pts. 3&18	1.14	0.46	Bensav Real Estate Inc.	$0.00	$20.00	$241.00	$261.00
550-18605	7	Pt. Lot 13	2.47	1.00	Toromont Industries Ltd.	$0.00	$46.00	$540.00	$586.00
550-18602	7	Pt. Lot 13 RP12R8957 Pts. 8&13	3.00	1.21	Barnim Property Holdings Inc.	$0.00	$48.00	$568.00	$616.00
550-18600	7	Pt. Lot 13 RP12R2282 Pts. 2-7, Pts. 10&13	16.65	6.74	Husky Oil Ltd.	$0.00	$617.00	$4,099.00	$4,716.00
550-17900	7	Pt. Lot 13	5.05	2.04	R.J. Cyr. Co. Inc.	$0.00	$256.00	$751.00	$1,007.00
550-17800	7	S Pt. Lot 13	0.91	0.37	Laval Tool & Mould Ltd.	$0.00	$129.00	$173.00	$302.00
550-18000	7	Pt. Lots 12 & 13 RP 12R2282 Parts 8 9 11 12 14 and 15	1.11	0.45	679637 Ontario Ltd.	$0.00	$222.00	$198.00	$420.00
Total on Privately-Owned - Non-Agricultural Lands						$0.00	$1,410.00	$7,426.00	$8,836.00
TOTAL ASSESSMENT						**$0.00**	**$1,500.00**	**$8,500.00**	**$10,000.00**

	(Acres)	(Ha.)
Total Area:	**38.79**	**15.69**

"SCHEDULE E-3"
SCHEDULE OF ASSESSMENT FOR FUTURE MAINTENANCE (BRIDGES)
DEMONTE BRANCH DRAIN
TOWN OF TECUMSEH

ONTARIO LANDS:

Roll No.	Con.	Description	Area Affected (Acres)	Area Affected (Ha.)	Owner	Special Benefit	Benefit	Outlet	Total Assessment
550-18610	7	Pt. Lot 13 RP12R8957 Pts. 4&17	2.81	1.14	Ministry of Transportation	$0.00	$0.00	$607.00	$607.00
Total on Ontario Lands						$0.00	$0.00	$607.00	$607.00

MUNICIPAL LANDS:

Description	Area Affected (Acres)	Area Affected (Ha.)	Owner	Special Benefit	Benefit	Outlet	Total Assessment
Webster Drive	1.68	0.68	Town of Tecumseh	$0.00	$0.00	$603.00	$603.00
Total on Municipal Lands				$0.00	$0.00	$603.00	$603.00

PRIVATELY-OWNED - NON-AGRICULTURAL LANDS:

Roll No.	Con.	Description	Area Affected (Acres)	Area Affected (Ha.)	Owner	Special Benefit	Benefit	Outlet	Total Assessment
550-18615	7	Pt. Lot 13 RP12R8957 Pts. 1&20	2.90	1.17	Bensav Real Estate Inc.	$0.00	$0.00	$735.00	$735.00
550-18614	7	Pt. Lot 13 RP12R8957 Pts. 2&19	1.07	0.43	1871418 Ontario Inc.	$0.00	$0.00	$229.00	$229.00
550-18612	7	Pt. Lot 13 RP12R8957 Pts. 3&18	1.14	0.46	Bensav Real Estate Inc.	$0.00	$0.00	$271.00	$271.00
550-18605	7	Pt. Lot 13	2.47	1.00	Toromont Industries Ltd.	$0.00	$0.00	$609.00	$609.00
550-18602	7	Pt. Lot 13 RP12R8957 Pts. 8&13	3.00	1.21	Barnim Property Holdings Inc.	$0.00	$0.00	$640.00	$640.00
550-18600	7	Pt. Lot 13 RP12R2282 Pts. 2-7, Pts. 10&13	16.65	6.74	Husky Oil Ltd.	$0.00	$0.00	$4,618.00	$4,618.00
550-17900	7	Pt. Lot 13	5.05	2.04	R.J. Cyr. Co. Inc.	$0.00	$0.00	$1,057.00	$1,057.00
550-17800	7	S Pt. Lot 13	0.91	0.37	Laval Tool & Mould Ltd.	$0.00	$0.00	$316.00	$316.00
550-18000	7	Pt. Lots 12 & 13 RP 12R2282 Parts 8 9 11 12 14 and 15	1.11	0.45	679637 Ontario Ltd.	$0.00	$0.00	$315.00	$315.00
Total on Privately-Owned - Non-Agricultural Lands						$0.00	$0.00	$8,790.00	$8,790.00
TOTAL ASSESSMENT						**$0.00**	**$0.00**	**$10,000.00**	**$10,000.00**

	(Acres)	(Ha.)
Total Area:	**38.79**	**15.69**

"SCHEDULE F"
DRAINAGE REPORT FOR THE
DEMONTE BRANCH DRAIN
TOWN OF TECUMSEH

SPECIAL PROVISIONS - GENERAL

1.0 GENERAL SPECIFICATIONS

The General Specifications attached hereto is part of "Schedule F." It also forms part of this specification and is to be read with it, but where there is a difference between the requirements of the General Specifications and those of the Special Provisions which follow, the Special Provisions will take precedence.

2.0 DESCRIPTION OF WORK

The work to be carried out under this Contract includes, but is not limited to, the supply of all **labour, equipment and materials** to complete the following items:

OPEN DRAIN WORK

- Excavation and trucking of excavated materials works for the Demonte Branch Drain, as follows:
  - Excavation of the drain bottom only, as follows:
    - Station 0+000 to Station 0+184, totalling approximately 184 lineal metres of drain and approximately 65 m^3 of material.
  - Trucking of all excavated, contaminated materials off-site, as follows:
    - At all properties totalling approximately 65 m^3 of material.
    - Disposal of contaminated material off-site (approximately 130 tonnes).
- Excavation and trucking of excavated materials works for the 8th Concession Drain North including removal and reinstallation of chain fence for access, as follows:
  - Excavation of the drain bottom only, as follows:
    - Station 1+915A to Station 2+000A, totalling approximately 85 lineal metres of drain and approximately 25 m^3 of material.
  - Trucking of all excavated, contaminated materials off-site, as follows:
    - At all properties totalling approximately 25 m^3 of material.
    - Disposal of contaminated material off-site (approximately 50 tonnes).

- Cable concrete drain liner, as follows:
  - Station 0+017 to Station 0+039 and Station 0+070 to Station 0+084 - Supply and install 230 m^2 CC35 cable concrete mats with stainless steel anchors. Contractor designed drawings required, sealed by Ontario Professional Engineer.
- Private access bridge replacement works, as follows:
  - Bridge No. 1 - Station 0+010 (Roll No. 550-17800) – Removal and disposal of existing 13.6 m long 700 mm diameter CSP, existing end walls and backfill off-site that are not suitable for native backfill. Installation of a new 16.0 m long, 1150 x 820 mm corrugated steel pipe arch (CSPA). complete with clear stone bedding up to pipe springline with filter fabric overlay (approximately 30 tonnes), full Granular 'A' backfill from springline to underside of driveway surface material (approximately 80 m^3) compacted providing a minimum 7.3 m (24 ft.) driveable top width, clean native surface layer beyond driveway (approximately 20 m^3) and sloping stone end walls with filter fabric underlay (approximately 20 m^2). All surplus native materials resulting from the culvert installation are to be trucked away to an approved dumping site at the Contractor's expense.
  - Bridge No. 1 – Asphalt driveway restoration. Supply and install 80 mm HL3 layer (approx. 10 tonnes) in 2 equal lifts of 40 mm thickness, compacted.
  - Bridge No. 3 - Station 0+091 (Roll No. 550-17800) – Removal and disposal of existing 10.5 m long 700 mm diameter CSP, existing end walls and backfill off-site that are not suitable for native backfill. Installation of a new 12.5 m long, 1150 x 820 mm corrugated steel pipe arch (CSPA). complete with clear stone bedding up to pipe springline with filter fabric overlay (approximately 25 tonnes), full Granular 'A' backfill from springline to underside of driveway surface material (approximately 60 m^3) compacted providing a minimum 6.1 m (20 ft.) driveable top width, clean native surface layer beyond driveway (approximately 20 m^3) and sloping stone end walls with filter fabric underlay (approximately 20 m^2). All surplus native materials resulting from the culvert installation are to be trucked away to an approved dumping site at the Contractor's expense.
  - Bridge No. 3 – Asphalt driveway restoration. Supply and install 80 mm HL3 layer (approx. 10 tonnes) in 2 equal lifts of 40 mm thickness, compacted.

- Bridge No. 4 - Station 0+216 (Roll No. 550-17900) – Removal and disposal of existing 42.0 m long 600 mm diameter HDPE, existing end walls and backfill off-site that are not suitable for native backfill. Supply and installation of a new 65.0 m long, 1150 x 820 mm polymer laminated corrugated steel pipe arch (CSPA). complete with clear stone bedding up to pipe springline with filter fabric overlay (approximately 110 tonnes), full Granular 'A' backfill from springline to underside of driveway surface material (approximately 320 m^3) compacted providing a minimum 30.0 m (98 ft.) driveable top width, clean native surface layer beyond driveway (approximately 20 m^3) and sloping stone end walls with filter fabric underlay (approximately 15 m^2). All surplus native materials resulting from the culvert installation are to be trucked away to an approved dumping site at the Contractor's expense.
- Bridge No. 4 – Asphalt driveway restoration. Supply and install 80 mm HL3 layer (approx. 65 tonnes) in 2 equal lifts of 40 mm thickness, compacted.

- Private access bridge cleaning works, as follows:
  - Bridge No. 2-Roll No. 550-17800 – Clean existing 1150 x 820 mm CSPA (31 m long).
- Temporary Silt Control Measures During Construction
- Road bridge cleaning works, as follows:
  - Cleaning of existing 1520 mm x 1220 mm box culvert, 55 m long under King's Highway No. 401. Work shall include disposal of materials off-site and all costs to obtain MTO permits.

3.0 ACCESS TO THE WORK

Access to the drain shall be from the private access road on Roll No 550-18000 and the gravel parking area on Roll No. 550-18600. The Contractor shall make his/her own arrangements for any additional access for his/her convenience. All road areas and grass lawn areas disturbed shall be restored to original conditions at the Contractor's expense.

4.0 WORKING AREA

The Contractor shall restrict his equipment to the working corridors as specified in this Section. Any damage resulting from non-compliance with this Section, shall be borne by the Contractor. The working corridor shall be measured from the top of drain bank or centre of drain where applicable, and shall be as follows:

FROM	TO	WORKING CORRIDOR
0+000	0+184	Demonte Branch Drain (Open Drain) Existing private roadway on south side of drain (7.4 m wide)
0+184	0+249	Demonte Branch Drain 15.0 m wide (Centred over drain)
0+249	0+410	Demonte Branch Drain (Closed Portion) 15.0 m wide (Centred over drain)
1+915A	2+000A	8th Concession Drain North (Open Drain) Existing private parking/laneway (Roll No. 550-17800) on west side of drain (Note: Existing chain link fence to be removed during drain repair and reinstalled when completed. Construction of drainage works along 401 highway corridor will require an encroachment permit to be obtained by the Town of Tecumseh.

5.0 BRUSHING

Brushing shall be carried out on the entire drain within the above identified sections of the drain where required and as specified herein. **All** brush and trees located within the drain side slopes shall be cut parallel to the side slopes, as close to the ground as practicable. Tree branches that overhang the drain shall be trimmed. Small branches and limbs are to be disposed of by the Contractor along with the other brush. Tree stumps, where removed to facilitate the drain excavation and reshaping of the drain banks, may be burned by the Contractor where permitted; otherwise, they shall be disposed of, off the site. The Contractor shall make every effort to preserve mature trees which are beyond the drain side slopes, and the working corridors. If requested to do so by the Drainage Superintendent, the Contractor shall preserve certain mature trees within the designated working corridors (see Section 4.0).

Except as specified herein, all brush and trees shall be stockpiled adjacent to the drain within the working corridors. Stockpiles shall not be less than 100 m apart and shall be a minimum of 2.0 m from the edge of the drain bank. All brush, timber, logs, stumps, large stones or other obstructions and deleterious materials that interfere with the construction of the drain, as encountered along the course of the drain are to be removed from the drain by the Contractor. Large stones and other similar material shall be disposed of by the Contractor off the site.

Following completion of the work, the Contractor is to trim up any broken or damaged limbs on trees which remain standing, disposing of the branches cut off along with other brush and leaving the trees in a neat and tidy condition. Brush and trees removed from the working area are to be put into piles by the Contractor, in locations where they can be safely burned, and to be burned by the Contractor after obtaining the necessary permits, as required. If, in the opinion of the Drainage Superintendent, any of the piles are too wet or green to be burned, he shall so advise the Contractor to haul away the unburned materials to an approved dump site. Prior to, and during the course of burning operations, the Contractor shall comply with the current guidelines prepared by the Air Quality Branch of the Ontario Ministry of Environment and shall ensure that the Environmental Protection Act is not violated.

Since the trees and brush that are cut off flush with the earth surface may sprout new growth later, it is strongly recommended that the Municipality make arrangements for spraying this new growth at the appropriate time so as to kill the trees and brush.

As part of this work, the Contractor shall remove any loose timber, logs, stumps, large stones or other debris from the drain bottom and from the side slopes. **Timber, logs, stumps, large stones or other debris shall be disposed of off-site**.

6.0 EXCAVATION OF DRAIN BOTTOM

In all cases, the Contractor shall use the benchmarks to establish the proposed grade. However, for convenience, the drawings provide the approximate depth from the surface of the ground and from the existing drain bottom to the proposed grades. **THE CONTRACTOR SHALL NOT EXCAVATE DEEPER THAN THE GRADELINES SHOWN ON THE DRAWINGS**. Should over-excavation of the drain bank occur, the Contractor will **not** be permitted to repair with native material packed into place by the excavator and reshaped. Should over-excavation occur, the Contractor will be required to have a bank repair detail engineered by a Professional Engineer (hired by the Contractor), to ensure long term stability of the bank is maintained. Such repairs shall be subject to approval by the Engineer and will be at no extra cost to the item.

Seeding of the disturbed drain banks shall be completed immediately following drain construction and as specified in Section 17.

All excavation work shall be done in such a manner as to not harm any vegetation or trees, not identified in this report or by the Drainage Superintendent for clearing. Any damages to trees or vegetation caused by the Contractors work shall be rectified to the satisfaction of the Drainage Superintendent.

The Contractor shall exercise caution around existing tile inlets and shall confirm with the property owners that all tiles have been located and tile ends repaired as specified.

7.0 STONE EROSION PROTECTION (SEP)

The Contractor shall supply and install the required quantities of graded stone rip-rap erosion protection materials where specified. All stone to be used for erosion protection shall be 125 - 250 mm clear **quarried rock** or OPSS 1001 placed over a non-woven filter fabric Terrafix 270R or approved equivalent. **Concrete rip-rap will not be permitted.**

The minimum thickness requirement of the erosion stone layer is 300 mm with no portion of the filter fabric to be exposed.

8.0 EROSION PROTECTION – CABLE CONCRETE MATS

Erosion protection for the drain banks from Station 0+017 to Station 0+039 and Station 0+070 to Station 0+084 shall be constructed of cable concrete mats (IECS CC35 or approved equal), approximately 4.88 metres wide, as shown on the drawings and installed as per manufacturer's recommendations. The concrete mat shall be installed using stainless steel clamps. The concrete mats shall be installed with geotextile underlay. Contractor designed drawings are required to be sealed by an Ontario Professional Engineer.

9.0 CLEANING OF PRIVATE ACCESS CULVERTS AND ROAD BRIDGES

At the locations listed below, the Contractor shall clean the existing pipes or culverts to their full capacity and cross section or width. The operation may be carried out by mechanical means or by flushing. Any damage resulting from the Contractor's operation shall be rectified at his expense. All material removed from the pipes or culverts shall be transported to a landfill site arranged by the Contractor. The Contractor shall be solely responsible for acquiring all permits required for the work and dump site. The Contractor shall take precautions during the construction period to avoid re-sedimentation of the pipes and culverts. Any sediment deposited as a result of construction activities shall be removed at the Contractor's expense.

- Bridge No. 2 – Station 0+055, 31 m long, 1150 x 820 mm corrugated steel pipe arch (CSPA) culvert.
- King's Highway No. 401 – 55 m long, 1520 mm span x 1220 mm rise concrete box culvert.

10.0 ACCESS BRIDGE WORK

10.1 Location of New Access Bridges

The new culvert shall be installed as shown on the drawings attached hereto. The centerline of the new culvert shall be located to align itself with the existing laneway.

10.2 Removal of Existing Culverts

The Contractor shall exercise caution when removing these materials as to minimize damage to the drain banks. Any damage to the drain shall be restored to original conditions at the expense of the Contractor. The removed materials (existing culvert debris and end wall materials) shall be hauled away off-site.

10.3 Drainage Pipe Materials

Materials shall be as follows:

Culvert Pipe	***Bridge No. 1 – Station 0+010:*** *New 16.0 m long, 1150 x 820 mm aluminized Type II corrugated steel pipe arch (CSPA) wall thickness of 2.0 mm and 68 mm x 13 mm corrugations with rerolled ends.* ***Bridge No. 3 – Station 0+091:*** *New 12.5 m long, 1150 x 820 mm aluminized Type II corrugated steel pipe arch (CSPA) wall thickness of 2.0 mm and 68 mm x 13 mm corrugations with rerolled ends.* ***Bridge No. 4 – Station 0+205:*** *New 65 m long, 1150 x 820 mm polymer laminated corrugated steel pipe (CSP), wall thickness of 2.0 mm and 68 mm x 13 mm corrugations with rerolled ends.* *New culverts shall be joined with annular aluminized corrugated wide bolt and angle couplers (minimum of 8 corrugation overlap and 2.8 mm wall thickness) and no single*

	pipe less than 6.0 m in length. All pipes connected with couplers shall abut to each other with no more than a 25 mm gap between pipes prior to installation of the coupler and wrapped with filter fabric.
Pipe Bedding Below Pipe to Pipe Culvert Springline	*20-25 mm clear stone conforming to OPSS Division 10.*
Backfill Above Pipe Springline up to Bottom of Driveway Surface Materials	*Granular 'A' made from crushed limestone conforming to OPSS Division 10.*
Asphalt Driveway Surface	*80 mm thickness HL3 hot mix asphalt surface (two 40 mm lifts)*
Erosion Stone	*All stone to be used for erosion protection shall be 125 - 250 mm clear quarried rock or OPSS 1004, minimum 300 mm thickness.*
Buffer Strips	*Dry native material free of topsoil, organic matter, broken concrete, steel, wood and deleterious substances.*
Filter Fabric	*"Non-Woven" geotextile filter fabric with a minimum strength equal to or greater than Terrafix 270R, Amoco 4546, Mirafi 140NC or approved equivalent.*

11.0 ACCESS BRIDGE WORK – FUTURE REPLACEMENT

11.1 Location of New Bridges

The future replacement of Bridge No. 2 shall be constructed in accordance with the specifications and drawings attached hereto. The centerline of the new culvert shall be located to align itself with the existing laneway in each case.

11.2 Removal of Existing Culverts

The Contractor shall exercise caution when removing these materials as to minimize damage to the drain banks. Any damage to the drain shall be restored to original conditions at the expense of the Contractor. The removed materials (existing culvert debris and end wall materials) shall be hauled away off-site.

11.3 Materials for New Bridges

Materials shall be as follows:

Culvert Pipe	***Bridge No. 2 – Station 0+055:*** *New 35 m long, 1150 x 820 mm aluminized Type II corrugated steel pipe (CSP), wall thickness of 2.0 mm and 68 mm x 13 mm corrugations with rerolled ends.* *Note: New CSP culverts shall be joined with annular aluminized corrugated wide bolt and angle couplers (minimum of 8 corrugation overlap and 2.8 mm wall thickness) and no single pipe less than 6.0 m in length. All pipes connected with couplers shall abut to each other with no more than a 25 mm gap between pipes prior to installation of the coupler and wrapped with filter fabric.*
Pipe Bedding Below Pipe to Pipe Culvert Springline	*20-25 mm clear stone conforming to OPSS Division 10.*
Backfill Above Pipe Springline up to Bottom of Driveway Surface Materials	*Granular 'A' made from crushed limestone conforming to OPSS Division 10.*
Driveway Surface	*80 mm HL3 Surface Asphalt (two 40 mm lifts)*
Erosion Stone	*All stone to be used for erosion protection shall be 125 - 250 mm clear quarried rock or OPSS.Muni 1004, minimum 300 mm thickness.*
Buffer Strips	*Dry native material free of topsoil, organic matter, broken concrete, steel, wood and deleterious substances.*
Filter Fabric	*"Non-Woven" geotextile filter fabric with a minimum strength equal to or greater than Terrafix 270R, Amoco 4546, Mirafi 140NC or approved equivalent.*

11.4 Culvert Installation

Suitable dykes shall be constructed in the drain so that the installation of the pipe can be accomplished in the dry. The drain bottom shall be cleaned, prepared, shaped and compacted to suit the new culvert configuration, as shown on the drawings. Granular materials shall be compacted to 100% of their maximum dry density; imported clean native materials shall be supplied, placed and compacted to 95% of their maximum dry density.

11.5 Sloping Stone End Walls

End walls shall be constructed of quarry stone rip-rap, as specified herein. Each end wall shall extend from the invert of the new culvert to the top of the proposed lane. The end walls shall be sloped 1 vertical to 1.5 horizontal with a filter fabric underlay surrounding the pipe and spanning across the entire width of the drain and wrapping around the drain banks to align with the ends of the new pipe culvert. The minimum thickness requirement of the erosion stone layer is 300 mm with no portion of the filter fabric to be exposed to sunlight.

11.6 Native Materials

Native materials suitable for use as backfill, as defined under Section 10.3, shall be salvaged from the existing bridge site, as required to complete the work as shown on the drawings, (**Native Backfill Zone only**). Where there is an insufficient amount of native fill materials for backfilling the culvert, the Contractor may elect to import additional dry native materials or alternatively use Granular 'B' at his/her own expense.

11.7 Lateral Tile Drains

Should the Contractor encounter any lateral tiles within the proposed culvert limits not shown on attached drawings, the Contractor shall re-route the outlet tile drain(s) in consultation with the Drainage Superintendent, as required, to accommodate the new culvert. **Tile drain outlets through the wall of the new culvert pipe will not be permitted.** All costs associated with re-routing lateral tile drains (if any) shall be at the Contractor's expense.

Care must be taken in handling plastic drain pipe in cold weather to avoid causing damage.

Plastic drain pipe shall be held in position on planned grade immediately after installation by careful placement of backfill material.

11.8 Asphalt Driveway Restoration

Asphalt driveways shall be constructed as follows:

- 80 mm HL3 Surface Asphalt (two 40 mm lifts)

Asphalt lifts shall be compacted to 98% of the Maximum Standard Marshall Density for hot mix asphalt.

11.9 Site Cleanup and Restoration

As part of the work and upon completion, the Contractor shall remove and dispose of, off-site any loose timber, logs, stumps, large stones, rubber tires, cinder blocks or other debris from the drain bottom and from the side slopes. Where the construction works cross a lawn, the Contractor shall take extreme care to avoid damaging the lawn, shrubs and trees encountered.

Upon completion of the work, the Contractor shall completely restore the area by the placement and fine grading of topsoil and seeding or sodding the area as specified by the Engineer or Drainage Superintendent.

SPECIAL PROVISIONS – TILE DRAIN

11.0 DRAINAGE PIPE CONSTRUCTION

11.1 Setting Out

The Engineer shall provide the Contractor in writing with benchmarks and points of reference. From these benchmarks and points of reference, the contractor will do his own setting out. The setting out by the Contractor shall include but shall not be limited to the preparation of grade sheets, the installation of centerline stakes, grade stakes, offsets, and sight rails.

If, during the setting out, the contractor finds an error in the benchmarks or points of reference provided by the Engineer or is uncertain as to the interpretation of the information provided or the work intended, he shall notify the Engineer immediately for additional verification or clarification before proceeding with construction.

The Contractor shall be responsible for the true and proper setting out of the works and for the correctness of the position, levels, dimensions and alignment of all parts of the work.

The Contractor shall be responsible to ensure that the alignment selected results in a minimum depth of cover of 300 mm over the top of the drainage pipe to be installed.

If, at any time during the progress of the works, an error shall appear or arise in the position, levels, dimensions or alignment of any part of the works, the Contractor shall, at his own expense, rectify such error to the satisfaction of the Engineer, unless such error is based on incorrect data supplied in writing by the Engineer.

11.2 Alignment and Removal of Existing 600 mm diameter HDPE pipe (Bridge No. 4)

Prior to commencing the work, the Contractor is to locate the course of the existing tile and mark it in the field at 30 m intervals before establishing the alignment for the proposed work.

The drainage pipe shall be laid on the alignment as shown on the drawings. The Contractor shall remove the existing 600 mm diameter HDPE pipe as the work progresses upstream.

After the existing tile drain has been removed it shall be disposed of off-site at an approved disposal location.

11.3 Profile

The drainage pipe shall be laid so that its invert shall be at the gradeline shown on the profile, which gradeline is governed by the benchmarks. The profile shows, for the convenience of the Contractors and others, the approximate depth of cut from the surface of the ground at 50 metre intervals, to the final invert of the drainage pipe in metres and decimals of a metre. Benchmarks, which have been established along the course of the drain, shall govern the final elevation of the drain. The locations and elevations of the benchmarks are shown on the General Details.

A variation in grade may be tolerated where the actual capacity of the drain exceeds the required capacity. The as-constructed invert of the drainage pipe shall not deviate from the specified gradeline more than 10% of the internal diameter of the drainage pipe. These deviations are allowable, provided they are gradual over a distance of not less than 10 m. No reverse grade shall be allowed.

11.4 Obstructions

All brush, timber, logs, stumps, stones or other obstructions that interfere with the construction of the drain, encountered along the course of the drain are to be removed by the Contractor. Timber, logs and stumps are to be dealt with in the same manner as specified for brush and trees. Large stones and other similar material are to be piled near the limit of the working corridor and the disposal of this material will be the responsibility of the Contractor.

11.5 Drainage Pipe Materials

11.5.1 Concrete Pipe

Tile Drain (Sta. 0+249 to Sta. 0+410)	New 900 mm (24”) diameter reinforced concrete pipe 100-D according to A257.2 standards.
Pipe Bedding Under Entire Pipe	Cut trench bottom to conform to shape of pipe otherwise Granular 'A' conforming to OPSS Division 10.
Backfill	Granular 'A' conforming to OPSS Division 10.

11.6 Excavating the Trench

Construction of the trench shall normally start at the outlet and proceed upstream and be by excavator. The trench walls may be cut vertically to a height of 1 metre from the trench bottom. Beyond 1 metre of the trench bottom the walls are to be cut to 1:1 side slopes.

Minimum width of trench, measured at the top of the drainage pipe, shall be equal to the outside diameter of the drainage pipe plus approximately half of the outside pipe diameter on both sides of the pipe, to permit proper granular material bedding placement around the drainage pipe.

The bottom of the trench shall be cut to a minimum of 150 mm below the gradeline to allow for the clearstone bedding materials.

Any additional excavated material not required for backfilling purposes shall be disposed of off-site.

The topsoil is to be separated from the subsoil and during the backfilling operation it shall be replaced as the top layer.

11.7 Laying Drainage Pipe

The Contractor shall supply and install clearstone material for bedding, placed to a depth of 150 mm below the design invert of the pipe and shaped to receive the pipe. After pipe placement, Granular 'B' backfill shall be placed and compacted to the springline of the pipe throughout its entire length.

Laying of the drainage pipe shall normally begin at the lower end of the drain and progress upstream.

All soil or debris in the drainage pipe shall be removed before installation.

All drainage pipes shall be free from clinging wet or frozen material that would hinder the laying of the drainage pipe on grade.

Before work is suspended for the day, all drainage pipe laid in trenches shall be blinded and any open ends closed.

Care must be taken in handling plastic drain pipe in cold weather to avoid causing damage.

Plastic drain pipe shall be held in position on planned grade immediately after installation by careful placement of backfill material.

11.8 Connections

Existing lateral drainage pipe encountered during the removal of the existing Demonte Branch Drain tile shall be connected to the new drainage pipe with prefabricated PVC tees.

Existing drains shall be inspected by the Drainage Superintendent and if found to be in working order, they shall be connected to the new system. Drains containing very little sediment shall be directly connected and drains containing substantial quantities of sediment shall be indirectly connected through filter material.

Drains carrying sewage or farmstead wastes shall not be connected to the drainage system.

Plastic tubing connections to rigid drainage pipe shall be made with manufactured plastic adapters.

Directional changes in plastic tubing may be made without the use of fittings provided that the centre line radius of the bend is not less than five times the tubing diameter.

Manufactured "T", "Y", or elbow fittings shall be used for connections at the junction of two drains.

All connections shall be carried out by the Contractor as part of his work. The cost of connections shall be an expense of the drain.

The Contractor shall plug the existing tile in the wall of the trench, on the opposite side on which the connection is made, if the tile extends across the trench. The Contractor shall provide a list each day, showing the number, stations and location of connections which shall be confirmed and verified daily by the Drainage Superintendent in charge of the work. The work shall be carried out to the satisfaction of the Drainage Superintendent.

11.9 Backfilling

After the Drainage Superintendent has inspected the laying of the drainage pipe, granular material compacted to 98% Standard Proctor Density shall be used as backfill material.

Large stones, roots, broken pipe and other material likely to impede or damage field equipment shall be removed from the backfill and disposed of by the Contractor.

To avoid the danger of damaging the drainage pipe, large stones and lumps of frozen earth may not be placed in the trench during the backfill operation.

Where plastic tubing is not blinded in a separate operation, a backfilling method shall be used that permits backfill material to roll into the trench and provide uniform soil placement around tubing, immediately after installation.

Except at laneways and road crossings, granular backfill material shall be compacted to 98% Standard Proctor Density.

12.0 STORM SEWER PIPE DRAIN

OPSS Form 410 shall apply and govern except as extended or amended herein. The size, type and class of sewer pipe shall meet CSA A257.2 standards. For reinforced concrete storm sewers, the bedding shall be Class 'B' as per OPSD 802.03 using approved Granular 'A' materials. The bedding shall be recessed to receive the hubs of the bell and spigot ends in order to allow the barrel of the pipe to be uniformly supported on compacted Granular 'A' bedding material for its entire length.

If the sewer pipe is situated within a traveled driveway or roadway the entire width and depth of the trench shall be backfilled with Granular 'A' material and compacted to 100% standard proctor density. Where the sewer is situated beyond the limits of the roadway, defined as the distance to 1.5 metres from the back of new roadway curb, the remaining excavation above the bedding shall be backfilled with select native material and mechanically compacted to 95% standard proctor density.

The Contractor shall install the pipe using rubber gasket joints and shall be joined in accordance with the manufacturer's instructions using approved gaskets and lubricating materials.

13.0 PRECAST CONCRETE MAINTENANCE HOLES (MH)

OPSS Form 407 and OPSD 701 shall apply and govern except as extended or amended herein. The Contractor shall supply and install precast concrete maintenance holes complete with frames, covers, safety platforms, ladder rungs, adjustment rings. Maintenance holes shall be placed on 300 mm compacted granular 'A' material and shall be backfilled around with approved granular materials in maximum 300 mm lifts to 98% standard proctor density. Where maintenance holes are located under roadways, backfill shall be non-shrink fill materials (Portland cement stabilized granular backfill as per OPSD standards). All maintenance holes shall come equipped with a minimum 600 mm deep sump.

14.0 STONE EROSION PROTECTION (SEP)

The Contractor shall supply and install the required quantities of graded stone rip-rap erosion protection materials where specified. All stone to be used for erosion protection shall be 125 - 250 mm clear **quarried rock** or OPSS 1001 placed over a non-woven filter fabric Terrafix 270R or approved equivalent. **Concrete rip-rap will not be permitted.**

The minimum thickness requirement of the erosion stone layer is 300 mm with no portion of the filter fabric to be exposed.

GENERAL SPECIFICATIONS

1.0 AGREEMENT AND GENERAL CONDITIONS

The part of the Specifications headed "Special Provisions" which is attached hereto forms part of this Specification and is to be read with it. Where there is any difference between the requirements of this General Specification and those of the Special Provisions, the Special Provisions shall govern.

Where the word "Drainage Superintendent" is used in this specification, it shall mean the person or persons appointed by the Council of the Municipality having jurisdiction to superintend the work.

Tenders will be received and contracts awarded only in the form of a lump sum contract for the completion of the whole work or of specified sections thereof. The Tenderer agrees to enter into a formal contract with the Municipality upon acceptance of the tender. The General Conditions of the contract and Form of Agreement shall be those of the Stipulated Price Contract CCDC2-Engineers, 1994 or the most recent revision of this document.

2.0 EXAMINATION OF SITE, PLANS AND SPECIFICATIONS

Each tenderer must visit the site and review the plans and specifications before submitting his/her tender and must satisfy himself/herself as to the extent of the work and local conditions to be met during the construction. Claims made at any time after submission of his/her tender that there was any misunderstanding of the terms and conditions of the contract relating to site conditions, will not be allowed. The Contractor will be at liberty, before bidding to examine any data in the possession of the Municipality or of the Engineer.

The quantities shown or indicated on the drawings or in the report are estimates only and are for the sole purpose of indicating to the tenderers the general magnitude of the work. The tenderer is responsible for checking the quantities for accuracy prior to submitting his/her tender.

3.0 MAINTENANCE PERIOD

The successful Tenderer shall guarantee the work for a period of one (1) year from the date of acceptance thereof from deficiencies that, in the opinion of the Engineer, were caused by faulty workmanship or materials. The successful Tenderer shall, at his/her own expense, make good and repair deficiencies and every part thereof, all to the satisfaction of the Engineer.

Should the successful Tenderer for any cause, fail to do so, then the Municipality may do so and employ such other person or persons as the Engineer may deem proper to make such repairs or do such work, and the whole costs, charges and expense so incurred may be deducted from any amount due to the Tenderer or may be collected otherwise by the Municipality from the Tenderer.

4.0 GENERAL CO-ORDINATION

The Contractor shall be responsible for the coordination between the working forces of other organizations and utility companies in connection with this work. The Contractor shall have no cause of action against the Municipality or the Engineer for delays based on the allegation that the site of the work was not made available to him by the Municipality or the Engineer by reason of the acts, omissions, misfeasance or non-feasance of other organizations or utility companies engaged in other work.

5.0 RESPONSIBILITY FOR DAMAGES TO UTILITIES

The Contractor shall note that overhead and underground utilities such as hydro, gas, telephone and water are not necessarily shown on the drawings. It is the Contractor's responsibility to contact utility companies for information regarding utilities, to exercise the necessary care in construction operations and to take other precautions to safeguard the utilities from damage. All work on or adjacent to any utility, pipeline, railway, etc., is to be carried out in accordance with the requirements of the utility, pipeline, railway, or other, as the case may be, and its specifications for such work are to be followed as if they were part of this specification. The Contractor will be liable for any damage to utilities.

6.0 CONTRACTOR'S LIABILITY

The Contractor, his/her agents and all workmen or persons under his/her control including sub-contractors, shall use due care that no person or property is injured and that no rights are infringed in the prosecution of the work. The Contractor shall be solely responsible for all damages, by whomsoever claimable, in respect to any injury to persons or property of whatever description and in respect of any infringement of any right, privilege or easement whatever, occasioned in the carrying on of the work, or by any neglect on the Contractor's part.

The Contractor, shall indemnify and hold harmless the Municipality and the Engineer, their agents and employees from and against claims, demands, losses, costs, damages, actions, suits, or proceedings arising out of or attributable to the Contractor's performance of the contract.

7.0 PROPERTY BARS AND SURVEY MONUMENTS

The Contractor shall be responsible for marking and protecting all property bars and survey monuments during construction. All missing, disturbed or damaged property bars and survey monuments shall be replaced at the Contractor's expense, by an Ontario Land Surveyor.

8.0 MAINTENANCE OF FLOW

The Contractor shall, at his/her own cost and expense, permanently provide for and maintain the flow of all drains, ditches and water courses that may be encountered during the progress of the work.

9.0 ONTARIO PROVINCIAL STANDARDS

Ontario Provincial Standard Specifications (OPSS) and Ontario Provincial Standard Drawings (OPSD) shall apply and govern at all times unless otherwise amended or extended in these Specifications or on the Drawing. Access to the electronic version of the Ontario Provincial Standards is available online through the MTO website, free of charge to all users. To access the electronic standards on the Web go to http://www.mto.gov.on.ca/english/transrd/. Under the title Technical Manuals is a link to the Ontario Provincial Standards. Users require Adobe Acrobat to view all pdf files.

10.0 APPROVALS, PERMITS AND NOTICES

The construction of the works and all operations connected therewith are subject to the approval, inspection, by-laws and regulations of all Municipal, Provincial, Federal and other authorities having jurisdiction in respect to any matters embraced in this Contract. The Contractor shall obtain all approvals and permits and notify the affected authorities when carrying out work in the vicinity of any public utility, power, underground cables, railways, etc.

11.0 SUBLETTING

The Contractor shall keep the work under his/her personal control, and shall not assign, transfer, or sublet any portion without first obtaining the written consent of the Municipality.

12.0 TIME OF COMPLETION

The Contractor shall complete all work on or before the date fixed at the time of tendering. The Contractor will be held liable for any damages or expenses occasioned by his/her failure to complete the work on time and for any expenses of inspection, superintending, re-tendering or re-surveying, due to their neglect or failure to carry out the work in a timely manner.

13.0 TRAFFIC CONTROL

The Contractor will be required to control vehicular and pedestrian traffic along roads at all times and shall, at his/her own expense, provide for placing and maintaining such barricades, signs, flags, lights and flag persons as may be required to ensure public safety. The Contractor will be solely responsible for controlling traffic and shall appoint a representative to maintain the signs and warning lights at night, on weekends and holidays and at all other times that work is not in progress. All traffic control during construction shall be strictly in accordance with the **Occupational Health and Safety Act** and the current version of the **Ontario Traffic Manuals**. Access to the electronic version of the **Ontario Traffic Manual** is available online through the MTO website, free of charge to all users. To access the electronic standards on the Web go to http://www.mto.gov.on.ca/english/transrd/, click on "Library Catalogue," under the "Title," enter "Ontario Traffic Manual" as the search. Open the applicable "Manual(s)" by choosing the "Access Key," once open look for the "Attachment," click the pdf file. Users require Adobe Acrobat to view all pdf files.

Contractors are reminded of the requirements of the Occupational Health and Safety Act pertaining to Traffic Protection Plans for workers and Traffic Control Plan for Public Safety.

14.0 SITE CLEANUP AND RESTORATION

As part of the work and upon completion, the Contractor shall remove and dispose of, off-site any loose timber, logs, stumps, large stones, rubber tires, cinder blocks or other debris from the drain bottom and from the side slopes. Where the construction works cross a lawn, the Contractor shall take extreme care to avoid damaging the lawn, shrubs and trees encountered. Upon completion of the work, the Contractor shall completely restore the area by the placement and fine grading of topsoil and seeding or sodding the area as specified by the Engineer or Drainage Superintendent.

15.0 UTILITY RELOCATION WORKS

In accordance with Section 26 of the Drainage Act, if utilities are encountered during the installation of the drainage works that conflict with the placement of the new culvert, the operating utility company shall relocate the utility at their own costs. The Contractor however will be responsible to co-ordinate these required relocations (if any) and their co-ordination work shall be considered incidental to the drainage works.

16.0 FINAL INSPECTION

All work shall be carried out to the satisfaction of the Drainage Superintendent for the Municipality, in compliance with the specifications, drawings and the Drainage Act. Upon completion of the project, the work will be inspected by the Engineer and the Drainage Superintendent.

Any deficiencies noted during the final inspection shall be immediately rectified by the Contractor.

Final inspection will be made by the Engineer within 20 days after the Drainage Superintendent has received notice in writing from the Contractor that the work is completed, or as soon thereafter as weather conditions permit.

17.0 FISHERIES CONCERNS

Standard practices to be followed to minimize disruption to fish habitat include embedment of the culvert a minimum 10% below grade, constructing the work 'in the dry' and cutting only trees necessary to do the work (no clear-cutting). No in-water work is to occur during the timing window unless otherwise approved by the appropriate authorities.

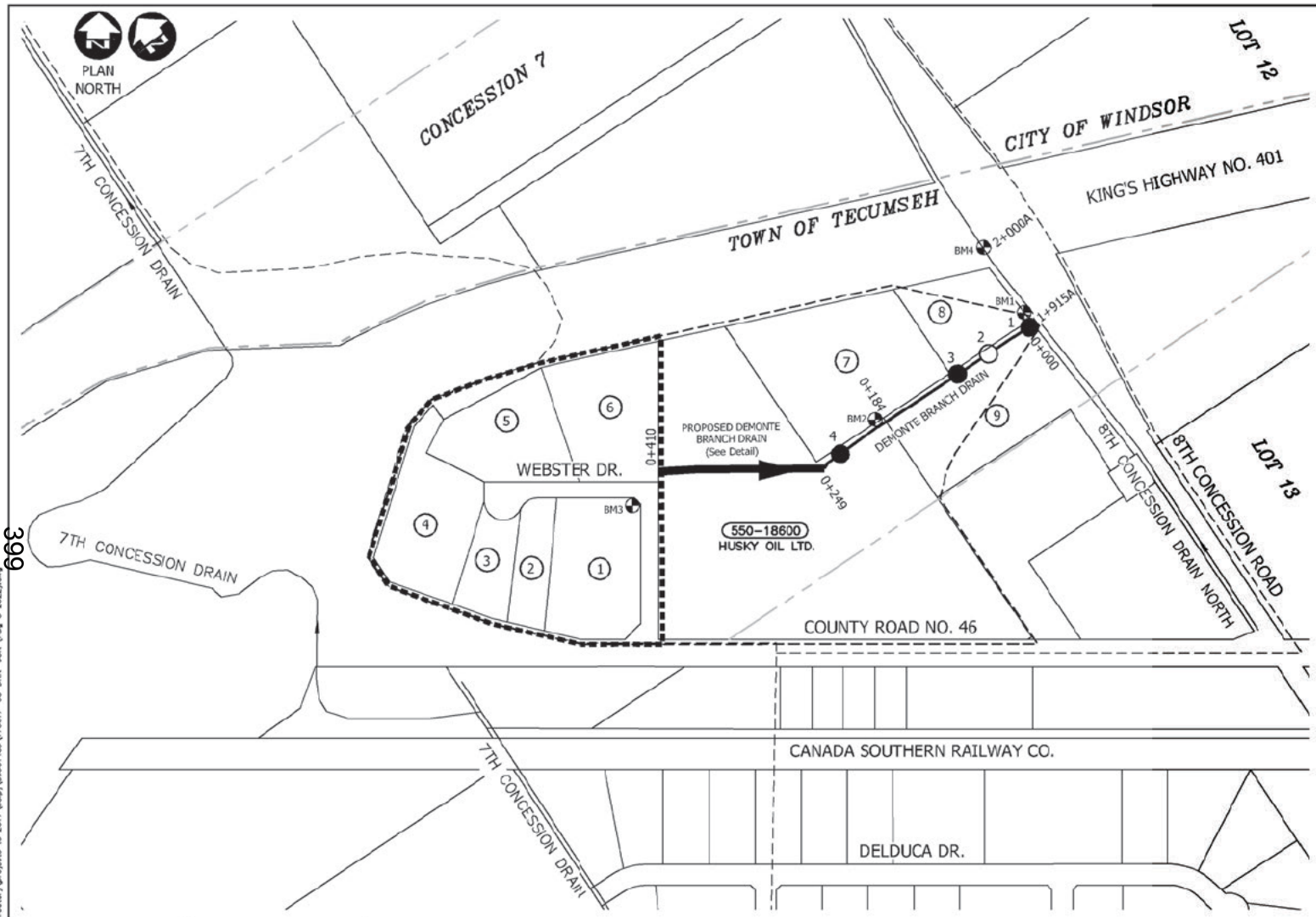

WATERSHED PLAN
SCALE=1:4,000

PARCEL OWNERSHIP		
NO.	ROLL NO.	OWNER
1	550-18615	BENSAV REAL ESTATE INC.
2	550-18614	1871418 ONTARIO INC.
3	550-18612	BENSAV REAL ESTATE INC.
4	550-18610	MINISTRY OF TRANSPORTATION
5	550-02601	TOROMONT INDUSTRIES LTD.
6	550-18602	BARNIM PROPERTY HOLDINGS INC.
7	550-17900	R.J. CYR CO INC.
8	550-17800	LAVAL TOOL & MOULD LTD
9	550-18000	679637 ONTARIO LTD.

SITE BENCHMARKS

BM1– TOP OF FIRE HYDRANT ON WEST SIDE OF 8TH CONCESSION DRAIN NORTH AT STATION 0+004.
ELEVATION=189.90m

BM2– TOP OF FIRE HYDRANT AT END OF OPEN PORTION OF EX. DEMONTE BRANCH DRAIN ON EAST SIDE OF DRIVEWAY TO R.J. CYR CO. STATION 0+189.
ELEVATION=190.39m

BM3– TOP OF FIRE HYDRANT ON SOUTHWEST SIDE OF BEND IN WEBSTER DRIVE.
ELEVATION=190.73m

BM4– TOP OF SOUTH END OF CONCRETE BOX CULVERT UNDER KING'S HWY. NO. 401 STATION 2+000 OF THE 8TH CONCESSION DRAIN NORTH.
ELEVATION=189.58m

NOTE: CONTRACTOR TO VERIFY BENCHMARKS PRIOR TO CONSTRUCTION.

LEGEND

- AREA REQUIRING DRAINAGE
- SURROUNDING DRAINS SUBWATERSHEDS
- DEMONTE BRANCH DRAIN
- OTHER DRAINS
- BRIDGE REPLACEMENT
- EXISTING BRIDGE
- BENCHMARK

LICENSED PROFESSIONAL ENGINEER
M. D. HERNANDEZ
100078099
Aug 5/22
PROVINCE OF ONTARIO

Conditions of Use

Verify elevations and/or dimensions on drawing prior to use. Report any discrepancies to Dillon Consulting Limited.

Do not scale dimensions from drawing.

Do not modify drawing, re-use it, or use it for purposes other than those intended at the time of its preparation without prior written permission from Dillon Consulting Limited.

No.	ISSUED FOR	DATE	BY
4	FINAL REPORT SUBMISSION	AUG. 5/22	MDH
3	ERCA REVIEW	JULY 22/22	MDH
2	PUBLIC INFORMATION CENTRE REVIEW	FEB. 18/22	MDH
1	CLIENT REVIEW	OCT. 21/21	MDH

DESIGN MDH	REVIEWED BY CDP
DRAWN WLB	CHECKED BY TRO
DATE August 5, 2022	
SCALE AS SHOWN	

DILLON CONSULTING

PROJECT NO 17-5617

DRAWING SCALES BASED ON A 11" X 17" SHEET

'SCHEDULE G'

Drainage Report for the

DEMONTE BRANCH DRAIN

Town of Tecumseh

SHEET TITLE WATERSHED PLAN

PAGE NO. 1 of 5

Aug 08, 2022 – 2:39pm C:\pw working directory\projects to 2017\33o\p0501433\175617-03-DRN-CON (Aug 5 2022).dwg

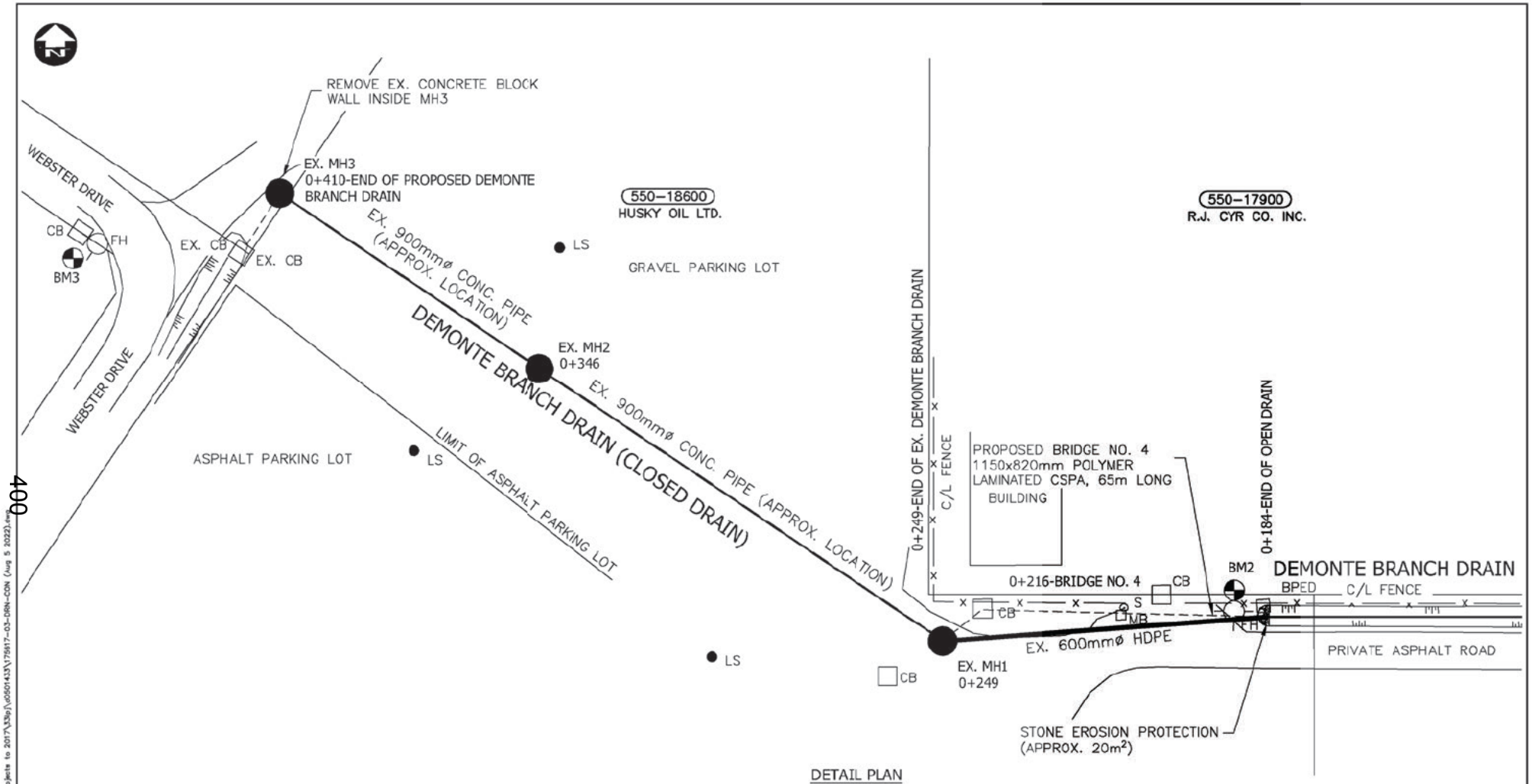

DETAIL PLAN
SCALE=1:750

LICENSED PROFESSIONAL ENGINEER
M. D. HERNANDEZ
100078099
Aug 5/22
PROVINCE OF ONTARIO

Conditions of Use

Verify elevations and/or dimensions on drawing prior to use. Report any discrepancies to Dillon Consulting Limited.

Do not scale dimensions from drawing.

Do not modify drawing, re-use it, or use it for purposes other than those intended at the time of its preparation without prior written permission from Dillon Consulting Limited.

No.	ISSUED FOR	DATE	BY
4	FINAL REPORT SUBMISSION	AUG. 5/22	MDH
3	ERCA REVIEW	JULY 22/22	MDH
2	PUBLIC INFORMATION CENTRE REVIEW	FEB. 18/22	MDH
1	CLIENT REVIEW	OCT. 21/21	MDH

DESIGN: MDH	REVIEWED BY: CDP
DRAWN: WLB	CHECKED BY: TRO
DATE: August 5, 2022	
SCALE: AS SHOWN	

DILLON CONSULTING

PROJECT NO. 17-5617

DRAWING SCALES BASED ON A 11" X 17" SHEET

'SCHEDULE G'

Drainage Report for the

DEMONTE BRANCH DRAIN

Town of Tecumseh

SHEET TITLE: DETAIL PLAN

PAGE NO: 2 of 5

Aug 08, 2022 – 2:41pm C:\pw working directory\projects to 2017\33p\\05014331\175617-03-DRN-CON (Aug 5 2022).dwg

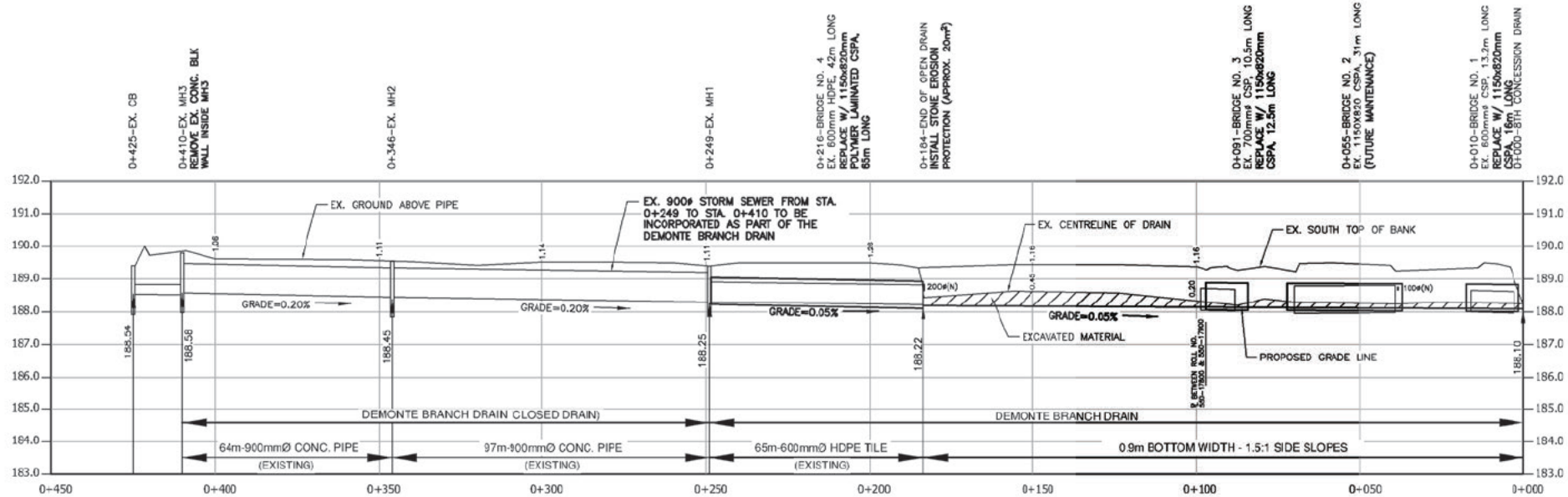

DEMONTE BRANCH DRAIN PROFILE

SCALE-HORIZ.=1:1250
VERT. =1:100

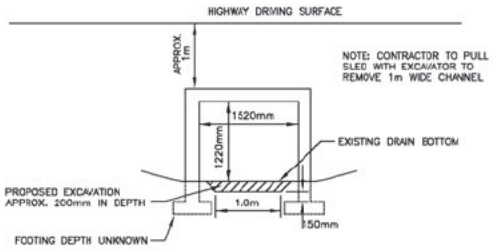

CULVERT UNDER HWY 401 SECTION

N.T.S.

8TH CONCESSION DRAIN NORTH PROFILE

SCALE-HORIZ.=1:1250
VERT. =1:100

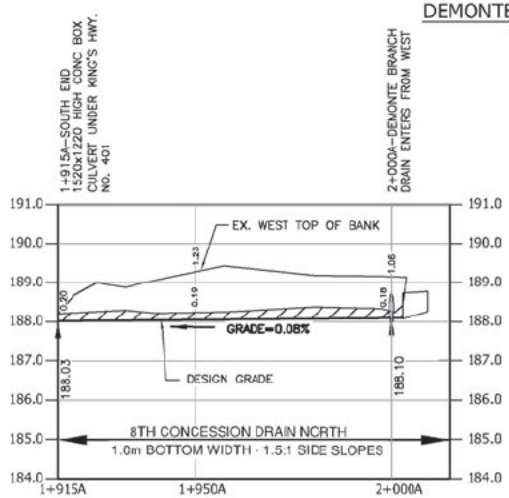

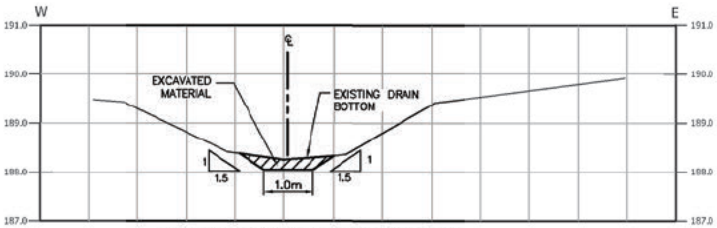

8TH CONCESSION DRAIN NORTH CROSS SECTION STA. 1+950A

SCALE=1:100

'SCHEDULE G'

LICENSED PROFESSIONAL ENGINEER
M. D. HERNANDEZ
100078099
Aug 5/22
PROVINCE OF ONTARIO

Conditions of Use

Verify elevations and/or dimensions on drawing prior to use. Report any discrepancies to Dillon Consulting Limited.

Do not scale dimensions from drawing.

Do not modify drawing, re-use it, or use it for purposes other than those intended at the time of its preparation without prior written permission from Dillon Consulting Limited.

No.	ISSUED FOR	DATE	BY
4	FINAL REPORT SUBMISSION	AUG. 5/22	MDH
3	ERCA REVIEW	JULY 22/22	MDH
2	PUBLIC INFORMATION CENTRE REVIEW	FEB. 18/22	MDH
1	CLIENT REVIEW	OCT. 21/21	MDH

DESIGN	MDH
REVIEWED BY	CDP
DRAWN	WLB
CHECKED BY	TRO
DATE	August 5, 2022
SCALE	AS SHOWN

DILLON CONSULTING

PROJECT NO. 17-5617

DRAWING SCALES BASED ON A 11" X 17" SHEET

Drainage Report for the
DEMONTE BRANCH DRAIN EXTENSION
Town of Tecumseh

SHEET TITLE: PROFILE

PAGE NO: 3 of 5

Aug 08, 2022 - 2:46pm C:\pw working directory\projects to 2017\33p\d0501433\175617-03-DRN-CON (Aug 5 2022).dwg

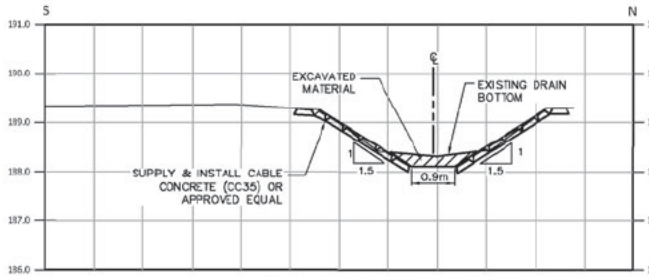

CROSS SECTION STA. 0+025
SCALE=1:100

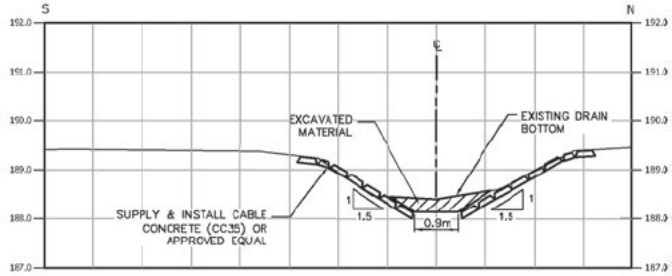

CROSS SECTION STA. 0+080
SCALE=1:100

NOTE: CABLE CONCRETE TO BE DESIGNED BY CONTRACTOR. DRAWINGS TO BE SEALED BY A LICENSED PROFESSIONAL ENGINEER IN THE PROVINCE OF ONTARIO.

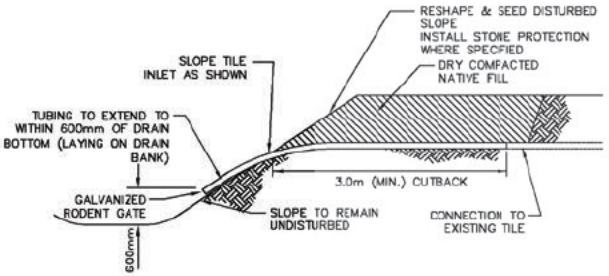

TYPICAL DRAINAGE TUBING TILE INLET REPLACEMENT DETAIL
(FOR TILES 150mmø OR SMALLER)
NOT TO SCALE

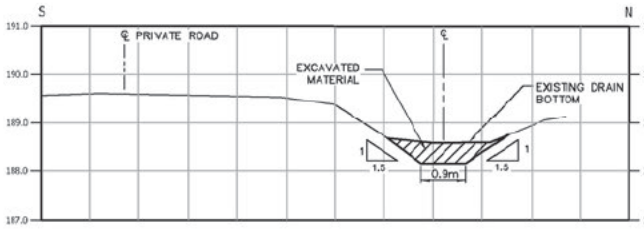

CROSS SECTION STA. 0+124
SCALE=1:100

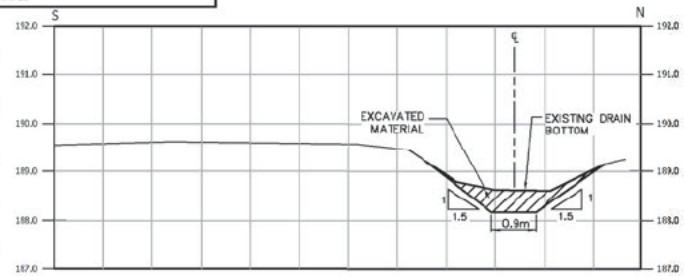

CROSS SECTION STA. 0+155
SCALE=1:100

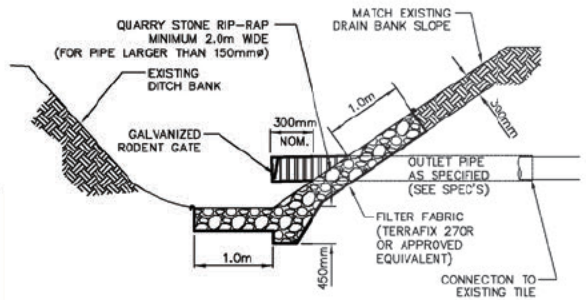

TYPICAL CSP TILE INLET REPLACEMENT DETAIL
NOT TO SCALE

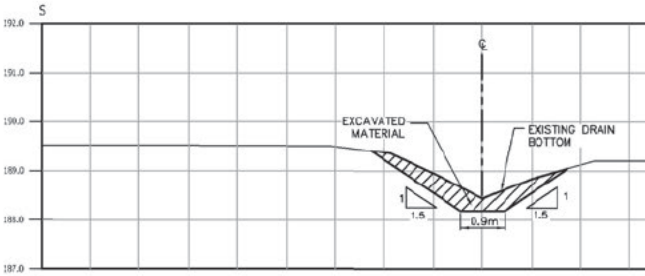

CROSS SECTION STA. 0+183
SCALE=1:100

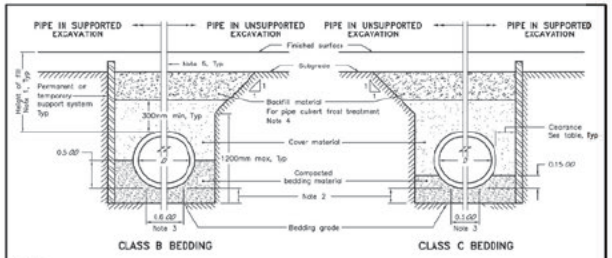

NOTES:
1 Height of fill is measured from the finished surface to top of pipe.
2 The minimum bedding depth below the pipe shall be 0.15Ø In no case shall this dimension be less than 150mm or greater than 300mm.
3 The pipe bed shall be compacted and shaped to receive the bottom of the pipe.
4 Pipe culvert frost treatment shall be according to OPSD 803.030 and 803.031.
5 Condition of excavation is symmetrical about centreline of pipe.
A Soil types as defined in the Occupational Health and Safety Act and Regulations for Construction Projects.
B All dimensions are in metres unless otherwise shown.

LEGEND:
Ø – Inside diameter
ØØ– Outside diameter

CLEARANCE TABLE	
Pipe Inside Diameter mm	Clearance mm
900 or less	300
Over 900	500

ONTARIO PROVINCIAL STANDARD DRAWING	Nov 2015	Rev 3
RIGID PIPE BEDDING, COVER, AND BACKFILL TYPE 1 OR 2 SOIL – EARTH EXCAVATION		OPSD 802.030

LICENSED PROFESSIONAL ENGINEER
M. D. HERNANDEZ
100078099
Aug 5/22
PROVINCE OF ONTARIO

Conditions of Use

Verify elevations and/or dimensions on drawing prior to use. Report any discrepancies to Dillon Consulting Limited.

Do not scale dimensions from drawing.

Do not modify drawing, re-use it, or use it for purposes other than those intended at the time of its preparation without prior written permission from Dillon Consulting Limited.

No.	ISSUED FOR	DATE	BY
4	FINAL REPORT SUBMISSION	AUG. 5/22	MDH
3	ERCA REVIEW	JULY 22/22	MDH
2	PUBLIC INFORMATION CENTRE REVIEW	FEB. 18/22	MDH
1	CLIENT REVIEW	OCT. 21/21	MDH

DESIGN	MDH
REVIEWED BY	CDP
DRAWN	WLB
CHECKED BY	TRO
DATE	August 5, 2022
SCALE	AS SHOWN

DILLON CONSULTING

PROJECT NO. 17-5617

DRAWING SCALES BASED ON A 11" X 17" SHEET

'SCHEDULE G'

Drainage Report for the

DEMONTE BRANCH DRAIN

Town of Tecumseh

SHEET TITLE: CROSS SECTIONS & DETAILS

PAGE NO: 4 of 5

Aug 08, 2022 – 2:51pm C:\pw working directory\projects to 2017\33p\\05014133\175617-03-DRN-CON (Aug 5 2022).dwg

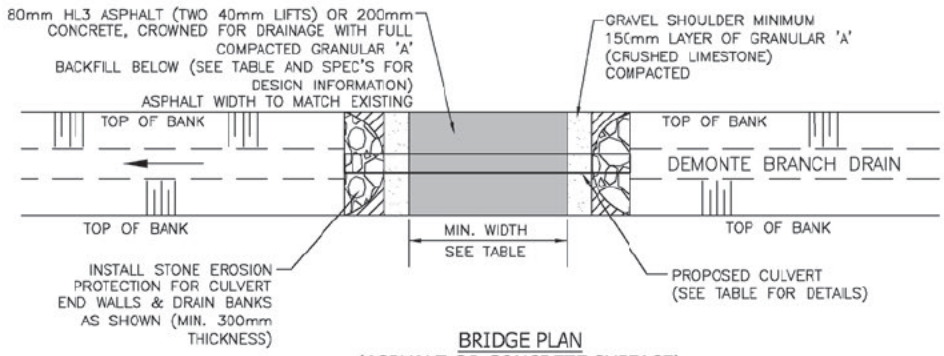

BRIDGE PLAN
(ASPHALT OR CONCRETE SURFACE)
NOT TO SCALE

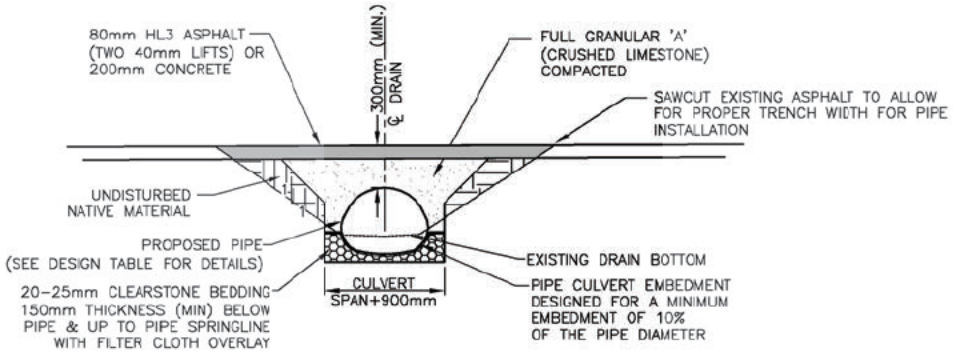

BRIDGE CROSS SECTION
(ASPHALT OR CONCRETE SURFACE)
NOT TO SCALE

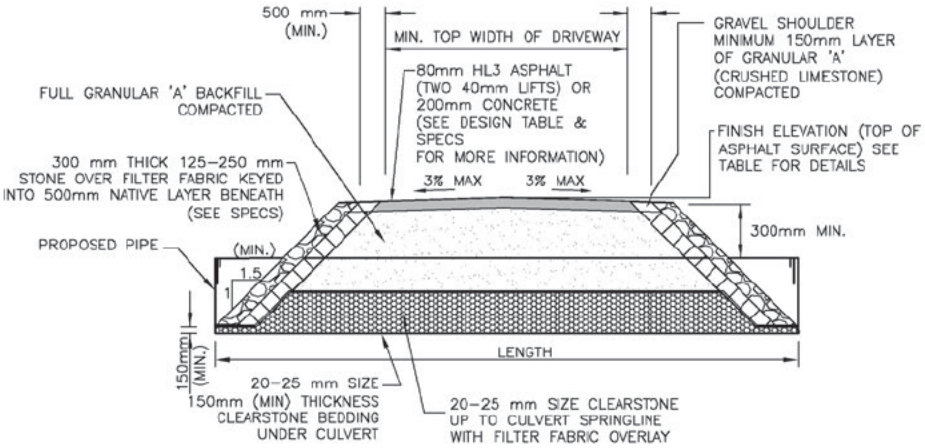

BRIDGE LONGITUDINAL SECTION
(ASPHALT OR CONCRETE SURFACE)
NOT TO SCALE

TABLE 1 – ACCESS BRIDGE DESIGN INFORMATION

DESCRIPTION	BRIDGE No. 1	BRIDGE No. 2 (FUTURE)	BRIDGE No. 3	BRIDGE No. 4
BRIDGE LOCATION (STA.)	0+010	0+055	0+091	0+216
PIPE INVERT ELEV. U/S SIDE(m)	188.03	188.06	188.07	188.17
PIPE INVERT ELEV. D/S SIDE(m)	188.01	188.02	188.05	188.14
TOP OF ℄ DRIVEWAY SURFACE ELEV. (m)	189.47	189.50	189.38	189.50
DRAIN BOTTOM (m) (DESIGN) (AT CENTRELINE OF CULVERT)	188.10	188.12	188.14	188.24
MIN. TOP WIDTH OF DRIVEWAY (m)	7.3	28.0	6.1	30
MIN. CULVERT GRADE (%)	0.10%	0.10%	0.10%	0.05%
CULVERT TYPE	CSPA	CSPA	CSPA	CSPA
CULVERT MATERIAL	ALUM.	ALUM.	ALUM.	POLYMER LAM.
CULVERT LENGTH (m)	16.0	35.0	12.5	65.0
CULVERT THICKNESS (mm)	2.0	2.0	2.0	2.0
CULVERT CORRUGATIONS (mm)	68x13	68x13	68x13	68x13
PIPE SIZE (mm)	1150x820	1150x820	1150x820	1150x820
CULVERT ENDWALL TYPE	SLOPING	SLOPING	SLOPING	SLOPING

LICENSED PROFESSIONAL ENGINEER
M. D. HERNANDEZ
100078099
Aug 5/22
PROVINCE OF ONTARIO

Conditions of Use

Verify elevations and/or dimensions on drawing prior to use. Report any discrepancies to Dillon Consulting Limited.

Do not scale dimensions from drawing.

Do not modify drawing, re-use it, or use it for purposes other than those intended at the time of its preparation without prior written permission from Dillon Consulting Limited.

No.	ISSUED FOR	DATE	BY
4	FINAL REPORT SUBMISSION	AUG. 5/22	MDH
3	ERCA REVIEW	JULY. 22/22	MDH
2	PUBLIC INFORMATION CENTRE REVIEW	FEB. 18/22	MDH
1	CLIENT REVIEW	OCT. 21/21	MDH

DESIGN: MDH
REVIEWED BY: CDP
DRAWN: WLB
CHECKED BY: TRO
DATE: August 5, 2022
SCALE: AS SHOWN

DILLON CONSULTING

PROJECT NO. 17-5617
DRAWING SCALES BASED ON A 11" X 17" SHEET

'SCHEDULE G'
Drainage Report for the
DEMONTE BRANCH DRAIN
Town of Tecumseh

SHEET TITLE: BRIDGE DETAILS
PAGE NO: 5 of 5

The Corporation of the Town of Tecumseh

By-Law Number 2023 - 022

Being a bylaw to provide for the repair and improvements to the Gouin Drain

the Council of The Corporation of the Town of Tecumseh (hereafter Town) has been requested to provide for the repair and improvement of the Gouin Drain;

And Whereas the Town procured a Drainage Report for the Gouin Drain and specifications from the consulting engineering firm of Dillon Consulting Limited, dated January 20, 2023 (hereafter Drainage Report);

And Whereas notice of a Public Meeting to hear comments from the affected property owners was given on Monday, January 30, 2023;

And Whereas a Public Meeting of Council was held on Tuesday, February 14, 2023, at 5:30 pm to hear from any affected property owners on the Drainage Report;

And Whereas the Council of The Corporation of the Town of Tecumseh is of the opinion that the repair and improvement of the Gouin Drain is desirable;

Now Therefore the Council of The Corporation of The Town of Tecumseh Enacts as follows:

1. **That** the Drainage Report providing for the repair and improvement of the Gouin Drain, dated January 20, 2023, as prepared by the consulting engineering firm Dillon Consulting Limited and attached hereto as Schedule A to this by-law, is hereby adopted and the drainage works as therein indicated and set forth is hereby approved and shall be completed in accordance therewith.

2. **That** the Treasurer, subject to the approval of Council, may agree with any bank or person for temporary advances of money to meet the costs of construction pending the completion of the drain and grants and computed payments are received.

3. **That** the Town may issue debentures for the amount borrowed and the amount of such debentures shall be reduced to the total amount of:

   a) Grants received under Section 85 of the said Act;

   b) Commuted payments made in respect of land and roads assessed.

4. **That** such debentures shall be made payable within five (5) years from the date of the debenture and shall bear interest at a rate as approved by resolution of Council.

5. **That** the specifications and General Specifications as established are adopted as set out in the Drainage Report which forms part of this by-law.

6. **That** the Mayor and Clerk are authorized to cause a contract for the construction of the works to be made and entered into with some person or persons, firm or corporations, subject to the approval of the Council to be declared by resolution.

7. **That** this by-law shall come into force upon and after the final passing thereof.

Read a first and second time this 14th day of February, 2023.

Gary McNamara
Signed with ConsignO Cloud (2023/02/21)
Verify with verifio.com or Adobe Reader.

Gary McNamara, Mayor

Robert Auger
Signed with ConsignO Cloud (2023/02/16)
Verify with verifio.com or Adobe Reader.

Robert Auger, Clerk

Read a third and final time this 11th day of April, 2023.

Gary McNamara, Mayor

Robert Auger, Clerk

DRAINAGE REPORT
FOR THE

GOUIN DRAIN & BRANCHES
(LITTLE RIVER OUTLET)

TOWN OF TECUMSEH
CITY OF WINDSOR

DILLON CONSULTING

(FINAL – COUNCIL CONSIDERATION)

20 JANUARY 2023

MARK D. HERNANDEZ, P.ENG.

FILE NO. 17-6773

TECUMSEH FILE NO. E09GO(37)

Mayor and Council
The Corporation of the Town of Tecumseh
917 Lesperance Road
Tecumseh, Ontario
N8N 1W9

DILLON CONSULTING

3200 Deziel Drive
Suite 608
Windsor, Ontario
Canada
N8W 5K8
Telephone
519.948.5000
Fax
519.948.5054

Drainage Report for the

GOUIN DRAIN & BRANCHES (LITTLE RIVER OUTLET)

In the Town of Tecumseh &
City of Windsor

Mayor and Council:

Instructions

The Town of Tecumseh received a request from the landowner of property Roll No. 570-43110 located in Block 'A' to repair and improve the Gouin Drain. Council accepted the request under Section 78 of the Drainage Act and on 14 November 2017 appointed Dillon Consulting Limited to prepare a report.

Watershed Description

The Gouin Drain alignment commences on the line between Lot 149 and Lot 150, Concession 1 in the Town of Tecumseh. It flows in a westerly direction, turning north at the west limit of Lot 149 toward the north side of Gouin Street. Here, it turns west for approximately 124 metres before turning north for 75 metres where it again then flows westerly to its current outlet being the E.C. Row Expressway roadside ditch. In the previous 1987 Gouin Drain report, Station 0+000 was defined as the southern limit of the E.C. Row Expressway. As part of this report, we have recommended a further extension of the Gouin Drain by way of deepening the existing highway ditch on the north side of E.C. Row Expressway. The Gouin Drain would continue northerly from the current outlet, crossing the highway and then turning westerly again to its outlet into the Little River Drain.

The total length of the drain is approximately 3,286 metres, of which the downstream extension comprises of 1,032 metres. The watershed area is approximately 211 hectares (521 acres) which consists of approximately 114 hectares (282 acres) within the Town of Tecumseh and 96 hectares (238 acres) within the City of Windsor.

The lands comprising the watershed are under mixed agricultural, and residential use. Notably, a portion of the E.C. Row Expressway will now also comprise part of the watershed. There is little topographic relief. From the Ontario Soil Survey, the principle surficial soil in the study area is described as Brookston Clay. Brookston clay is characterized as a very slow draining soil type. Most of the agricultural land parcels are systematically tiled.

Drain History

The recent history of Engineers' reports for the Gouin Drain follows:

- **28 January 1987 by Wm. J. Setterington, P.Eng.:** This reconsidered report recommends brushing and removal of sediment along the entirety of the drain, along with deepening/widening and relocation of the drain in select locations along its length. This report also recommended the removal and replacement of access bridges along the drain.
- **2 October 1981 by C. G. Russell Armstrong, P.Eng.:** This report found the drain to be “badly out of repair”. The recommended work included the repair and improvement of the Gouin Drain, including a thorough brushing and cleanout. It also recommended that, the drain be deepened from E.C. Row Expressway to Gouin Street. The report recommends that most upstream 28 metres of drain be enclosed with a 450 mm (18”) diameter plastic pipe, and that the existing culverts with the exception of the Shawnee Road culvert, be replaced and enlarged to accommodate for flows from a proposed development.

On-Site Meeting

The Municipality invited the affected landowners to attend an on-site meeting on 8 February 2018 and 6 April 2018 to better understand the nature of the request. The concerns brought to the meeting are as follows:

- Conveyance of water is problematic due to overgrowth along the banks, and there is stagnant water in many areas of the drain.

- Flooding along the drain and the upstream residential area, is prevalent during heavy rainfalls.

An additional on-site meeting was held on January 22, 2020 to discuss the nature of the rear yard drainage for the properties within the Gouin Drain Branch North and South as well as any drainage issues these properties are experiencing.

Records of the meeting are provided in Schedule 'A-1', Schedule 'A-2', and Schedule 'A-3' which is appended hereto.

Public Information Centre Meeting

The Municipality held a Public Information Centre (PIC) on 28 April, 2022 to present the works proposed on the on the Gouin Drain and Branches. Based on discussion with the landowners and upon further review of the report, the following changes have been made:

- Block 'C' has been eliminated from the Schedule of Assessments and Schedule of Future Maintenance for the Gouin Drain Branch North and has been replaced with full assessment schedules, and
- An additional secondary working corridor was added on the north side of the Gouin Drain between Station 2+162 and Station 2+680.

Records of the meeting are provided in Schedule 'A-4' which is appended hereto.

Survey

Our survey and examination of the Gouin Drain was carried out in April 2018. Additional drain data was collected in June 2018 and May 2019. The survey comprised the recording of topographic data and examining the channel for available depth necessary to provide sufficient drainage, as well as existing stormwater infrastructure. We commenced the survey at the outlet of the existing roadside ditch which outlets to the Little River Drain on the north side of E.C. Row Expressway within the City of Windsor. We then proceeded upstream along the roadside ditch, crossing E.C. Row Expressway to Anchor Drive where the existing Gouin Drain currently outlets. We continued upstream along the Gouin Drain in an easterly direction, crossing Banwell Road and into the Town of Tecumseh to the most upstream section of the drain at the line between Lot 149 and Lot 150 located within the residential

area of Corbi Lane and Shawnee Road.

Our survey revealed a significant amount of overgrown brush and vegetation with frequent accumulations of debris, forming blockages within the channel. There is a uniform build-up of sediment averaging 200 mm to 450 mm above the design bottom in the 1987 engineer's report.

The drain alignment shown within the Setterington, 1987 report shows the alignment of the Gouin Drain passing through the rear yard of homes that front the west side of Shawnee Road. Since the previous Engineer's Report, the drain was altered to accommodate a subdivision development in 1997. This portion of drain, as well as connected storm sewers were inspected with CCTV sewer cameras in April 2019 to determine the condition and size of the sewers. Inspections revealed the sewer behind the houses fronting Corbi Lane includes a partially crushed 1050 mm diameter CSP draining northerly to a 300 mm diameter HDPE pipe in good condition which outlets to the 1500 mm diameter concrete pipe under Gouin Street. The inspection also revealed a 300 mm diameter HDPE pipe draining southerly to a 600 mm diameter concrete sewer which outlets to the 1050 mm concrete trunk sewer underneath Corbi Lane, all of which were found in good condition.

Various utilities were found crossing the bridge over top the culvert near Lauzon Road in the City of Windsor, including a 250 mm (10") diameter high pressure transmission gas line and a 150 mm (6") diameter high pressure distribution gas line, Bell Fibre cables, a 300 mm (12") diameter watermain, and an underground power duct. Depths of the gas and Bell Fibre utilities were unknown, so in September 2020, these utilities were revealed using hydro-excavation to determine the existing depth of cover.

Excess Soils Management

In April 2021 in consultation with the Town of Tecumseh, Dillon Consulting completed an Environmental Review and Soil Characterization Report following the requirements of *Ontario Regulation 406/19 – On-Site Excess Soil Management* (O. Reg 406/19) to determine the level of contamination of the excess soils generated from the Gouin Drain improvements and confirm appropriate reuse criteria for the excess soils.

The Environmental Review investigated for potential or actual sources of environmental contamination that would affect the reuse capability of any

excavated soils as a result of the Gouin Drain improvements along the north side of the E.C. Row Expressway. A review of historical and current records of the surrounding area and a cursory site inspection were completed to identify areas of potential environmental concern, and to support planning of the soil sampling program. The review identified that the downstream most 315 metres of the drain is a site of a cutting oil spill in 1988. Any soil excavated from this length of drain will be considered contaminated and therefore has no allowable reuse potential.

Soil sampling was conducted on March 5, 2021 with the use of an excavator. The sampling program consisted of 13 test pits evenly distributed over the length of drain located on the north side of E.C. Row Expressway, excluding the downstream section of drain identified in the Environmental Review as having been subject to a cutting oil spill. Soil sample analyses within the remaining section of drain along the north side of the expressway indicate that most of the soil is to be managed as waste, with the exception of a 230 m length of drain which has some reuse potential as described in the Specifications.

Excess soil generated from the report recommendations but not captured in the soil sampling work described shall adhere to the relevant requirements as set out in O. Reg 406/19.

Design Considerations

The Design and Construction Guidelines published by the Ontario Ministry of Agriculture, Food and Rural Affairs (OMAFRA) recommends that open drainage systems and farm crossings serving farmlands be designed to effectively contain and convey the peak runoff generated from a storm event having a frequency of occurrence of 1 in 2 years. The arterial and collector road bridges have been designed for a storm event having a frequency of 1 in 10 years and analyzed for a 1 in 25 year storm event to confirm that flows do not overtop the roadway. Likewise, the 1 in 5 year storm event was considered in determining hydraulic capacity of the culvert crossing Shawnee Road, and a 1 in 25 year storm event was considered for the culvert crossing E.C. Row Expressway.

In addition, we have reviewed the performance of the outlet portion of drain in an improved state during the 1:100 year storm event and have found that

the hydraulic grade line is reduced in the drain due to the improvements recommended downstream of the E.C. Row Expressway Bridge. We have also reviewed the Little River Floodplain Mapping Study which is currently being completed and have found that the Gouin Drain does not fall within an existing floodplain.

We believe that these design standards should provide a reasonable level of service, but it should be clearly understood that runoff generated from large storms or fast snow melts may sometimes exceed the capacity of the proposed systems and result in surface ponding for short periods of time. It should be further noted that some of the agricultural lands have been identified for future development. When that occurs, stormwater management for the affected lands and further improvements to the drain may be required.

The upper most portions of the Gouin Drain have been altered from an open drain to a covered drain during the residential development of the area completed in 1997. Sections of this covered drain have collapsed and no longer provide sufficient drainage to the abutting lands.

A 250 mm diameter corrugated steel pipe orifice was originally specified in the design drawings for the development along Corbi Lane on the lower end of the enclosed upstream Gouin Drain portion along Gouin Street. Alternative forms of stormwater management were considered including a temporary stormwater pond in the open farm fields west of Corbi Lane. However, upon further investigation in the field, it was determined that the orifice was not in place and so an alternative form of storage was not required.

<u>NextStar Battery Production Facility</u>

Property Roll Nos. 090-040-00103, 090-040-03403 & 090-040-4000 within the City of Windsor were previously used for agricultural purposes, however these properties are being considered for a battery production facility that is currently under construction. Bridge Nos. 8 through 12 currently provide access to said lands.

The proposed development is required to have stormwater management controls as to not adversely impact the level of service provided by the drain.

Existing Conditions and Recommendations (Gouin Drain)

We have determined that the current outlet of the Gouin Drain into the E.C. Row Expressway roadside ditch is insufficient and is required to be extended to the Little River Drain. It is recommended that the roadside ditch along the north side of E.C. Row Expressway, including existing structures within this drain, be incorporated as part of the Gouin Drain and improved as described herein to provide sufficient outlet for upstream lands.

The last report for repair and improvement of the drain upstream of Anchor Drive was completed in 1987. The drain will require a bottom cleanout to align with the 1987 profile with minor adjustments as shown on the profile drawings attached herein. Generally, the drain banks are reasonably well grassed and stabilized. The new section of drain downstream of Anchor Drive will require deepening to achieve hydraulic capacity to accommodate the flows from the original Gouin Drain watershed as well as the contributing flows from the E.C. Row Expressway roadside ditch system.

All of the access bridges were inspected during the course of our investigation. Our assessment identified culverts that are in poor condition, good condition and culverts that are still in serviceable condition, but will likely require replacement in the next 5 to 10 years. Bridge Nos. 1 and 3 are recommended for immediate replacement to accommodate deepening of the drain. Bridge Nos. 5, 6, 7, 13, 14, 15, 17, 18, and 20 are recommended for future replacement. Bridge Nos. 2, 8, 9, 10 and 19 are recommended for removal along with the recommended drain cleanout. At the request of the landowner, Bridge No. 16 is recommended not to be replaced and is to be removed at the end of its serviceable life. The said bridge serves as a secondary access to the property.

Bridge Nos. 11 & 12 will be recommended to be removed and replaced with a new enclosure to service the new NextStar battery production plant, however these recommendations are included under a separate report. No recommendations are being made for these bridges under this report.

It should be noted that there is limited available cover for the proposed bridge replacements. To address this limitation, pipe arches were considered to meet both the cover and flow requirements for Bridges No. 1, 3, 6, 7, 13, 14, 15, 17 and 18.

Bridge No. 4 (E.C. Row Expressway crossing) was assessed for hydraulic conveyance under the 25 year design storm and was found sufficient with the recommended improvements.

We also recommend the bottom of the drain be cleaned out including through existing bridges that are to remain.

Specific structure numbers have been designated for ease of reference between the specifications and the drawings. The locations, dimensions, condition and use of each structure are as follows:

Bridge No. 1: Station 0+200 Enbridge Gas, Enwin Water, Enwin Powerlines & Bell Canada

Twin 28 m long, 1370 mm x 1000 mm corrugated steel pipe arches with concrete end protection and grassed driveway currently provides access and protection to various utilities crossing over the culvert, including a 250 mm (10”) diameter high pressure transmission gas line, a 150 mm (6”) diameter high pressure distribution gas line, a dual Bell Fibre duct, a 300 mm (12”) diameter watermain, and an underground power duct. A 525 mm (21”) diameter sanitary sewer exists beneath the culvert. This culvert was determined to have adequate capacity to convey the 2 year design storm.

To accommodate the deepening of the drain and to reduce debris build up caused by twin culvert, we recommend this bridge be replaced with a single new 32 m long, 2500 mm x 1830 mm corrugated steel pipe arch (CSPA) with rip rap end walls with filter fabric underlay, providing a minimum a 24 m grassed top width.

Utility supports and third party utility inspection is anticipated during this work.

Bridge No. 2: Station 0+534 City of Windsor

Twin 6 m long, 1900 mm x 1050 mm corrugated steel pipe arches with concrete headwall end protection and grassed driveway exists.

There is no longer evidence that this bridge is used, we recommend it be removed to accommodate the deepening of the drain.

Bridge No. 3: Station 0+825 Enwin Powerlines

Twin 7 m long, 1520 mm x 1160 mm corrugated steel pipe arches with

concrete end protection and grassed driveway currently provides access to Enwin Powerlines utilities. This culvert was determined to have inadequate capacity to convey the 2 year design storm when considering the limited depth of the drain when compared to the existing downstream Bridge No. 1.

To accommodate the deepening of the drain and to reduce debris build up caused by twin culverts, we recommend this bridge be replaced with a single new 16 m long, 2500 mm x 1830 mm corrugated steel pipe arch (CSPA) with rip rap end walls with filter fabric underlay, providing a minimum 7.3 m gravel driveable top width.

Bridge No. 4: Station 0+958 City of Windsor (E.C. Row Expressway)

Twin 40 m long, 3050 mm x 1830 mm concrete box culverts with 45° bevelled concrete headwalls constitutes the drain crossing for the EC Row expressway. This bridge appears to be in good repair and has sufficient capacity to convey the flows from the 25 year design storm. However, drain bottom scour is evident on the upstream and downstream ends of the culvert as a result of increased velocities upon entering and exiting the culvert.

We recommend the repair of the drain on the upstream and downstream ends of the E. C. Row Expressway culvert by lining with stone erosion protection (minimum 300 mm thickness) along the drain bottom and drain banks. The original design of this bridge from Rankin McCormick (1979) specified clear stone be laid to a depth of 0.76 m (2’8”) along the entire length of culvert, however no evidence of clear stone bottom was found. The stone erosion protection to be laid shall transition the drain bottom within the culvert and the drain bottom upstream and downstream of the culvert.

Bridge No. 5: Station 1+020 City of Windsor (Anchor Drive)

Twin 19 m long, 1520 mm diameter corrugated steel pipes with block end walls and asphalt roadway provides a road crossing. An 18.3 m long culvert was shown at this location on the 1987 profile. This culvert was determined to have adequate capacity to convey the 10 year design storm.

We anticipate that this culvert will require replacement within the next 10 years or sooner if conditions warrant. We recommend that in the future the culvert be replaced with a new 18 m long, twin 1500 mm diameter concrete pipes complete with interlocking pre-cast concrete block end walls, providing

a minimum 8.5 m wide driveable asphalt surface. We find it will be necessary to excavate the southern bank of the Gouin Drain to allow for sufficient separation of the twin pipes. It is also recommended to relocate the outlet of the 750 mm diameter CSP road crossing into the proposed concrete pipe. The drain banks are also recommended to be lined with stone erosion protection with filter fabric underlay as shown on the plans herein.

Bridge No. 6: Station 1+109 Gary Barbesin (Roll No. 070-650-01303)

A 7.6 m long, 2240 mm x 1630 mm corrugated steel pipe arch with bagged concrete end protection and a gravel driveway provides access to this property. A 7.3 m long culvert was shown at this location on the 1987 profile. This culvert was determined to have adequate capacity to convey the 2 year design storm.

We anticipate that this culvert will require replacement within the next 10 years or sooner if conditions warrant. We recommend that in the future the culvert be replaced with a new 14 m long, 2230 mm x 1700 mm aluminized corrugated steel pipe arch complete with rip rap end walls with filter fabric underlay, providing a minimum 7.3 m wide gravel surface.

Bridge No. 7: Station 1+191 Jamieson Laboratories Inc. (Roll No. 090-040-01351)

A 40.5 m long, 2440 mm x 1600 mm corrugated steel pipe arch with rip rap end protection and asphalt driveable top width provides secondary access to property Roll No. 090-040-01351 through property Roll No. 070-650-01303. A culvert was not shown at this location on the profile in the 1987 report, therefore the origin is unknown. This culvert was determined to have adequate capacity to convey the 2 year design storm.

We anticipate that this culvert will not require replacement within the near future. However, when needed we recommend that the culvert be replaced with a new 41 m long 2230 mm x 1700 mm corrugated steel pipe arch with rip rap end protection and asphalt roadway provides a 22 m asphalt driveable top width with a 5.3 m gravel shoulder on the west side of the driveway and a 6.7 m gravel shoulder on the east side of the driveway, consistent with existing conditions.

Bridge No. 8: Station 1+278 City of Windsor (Roll No. 090-040-03403)

A 9.7 m long, 2240 mm x 1630 mm corrugated steel pipe arch with bagged concrete end protection and a gravel driveway provides access to this property. A 7.3 m long culvert was shown at this location on the 1987 profile.

This culvert is recommended to be removed as the battery production facility will have alternate access detailed under a separate report.

Bridge No. 9: Station 1+442 City of Windsor (Roll No. 090-040-00103)

An 8.2 m long, 2240 mm x 1630 mm corrugated steel pipe arch with bagged concrete end protection and a gravel driveway provides access to this property. A culvert was not shown at this location on the 1987 profile, therefore the origin is unknown.

This culvert is recommended to be removed as the battery production facility will have alternate access detailed under a separate report.

Bridge No. 10: Station 1+646 City of Windsor (Roll No. 090-040-00103)

A 7.8 m long, 2240 mm x 1630 mm corrugated steel pipe arch with concrete headwalls and a gravel driveway provides secondary access to this property. A 7.8 m long culvert was shown at this location on the 1987 profile.

This culvert is recommended to be removed as the battery production facility will have alternate access detailed under a separate report.

Bridge No. 11: Station 1+955 City of Windsor (Roll No. 090-040-00103)

A 7.9 m long, 2240 mm x 1630 mm corrugated steel pipe arch with bagged concrete end protection and a gravel driveway provides access to this property. A 7.3 m long culvert was shown at this location on the 1987 profile. This culvert was determined to have adequate capacity to convey the 2 year design storm.

Access to the battery production facility is being recommended under a separate report that will include removal of the existing bridge. No recommendations are being made under this report.

Bridge No. 12: Station 1+980 City of Windsor (Roll No. 090-040-00103)

A 7.6 m long, 2240 mm x 1630 mm corrugated steel pipe arch with bagged concrete end protection and a gravel driveway provides secondary access to

this property. A 7.3 m long culvert was shown at this location on the 1987 profile. This culvert was determined to have adequate capacity to convey the 2 year design storm.

Access to the battery production facility is being recommended under a separate report that will include removal of the existing bridge. No recommendations are being made under this report.

Bridge No. 13: Station 2+116 City of Windsor (Banwell Road)

A 15.6 m long, 2240 mm x 1630 mm corrugated steel arch pipe with bagged concrete end protection and asphalt roadway provides a road crossing. A 15.3 m long culvert was shown at this location on the 1987 profile.

We have considered the proposed access culvert for the battery production facility which is to include a 178 m long culvert directly attached to the downstream end of the existing Bridge No. 13 culvert.

We anticipate that the existing road portion of culvert will require replacement within the next 10 years or sooner if conditions warrant. We recommend that in the future the culvert be replaced with a new 18 m long, 2500 mm x 1830 mm polymer laminated corrugated steel pipe arch complete with concrete block end walls and a 12.0 m asphalt driveable top width.

Bridge No. 14: Station 2+208 507822 Ontario Inc. First Mirage Management Inc. (Roll No. 570-46201)

A 7.8 m long, 2240 mm x 1630 mm corrugated steel pipe arch with bagged concrete end protection and gravel driveway provides access to this property. A 7.3 m long culvert was shown at this location on the 1987 profile. This culvert was determined to have adequate capacity to convey the 2 year design storm.

We anticipate that this culvert will require replacement within the next 10 years or sooner if conditions warrant. We anticipate that this culvert will not require replacement within the near future, but in the future when the culvert needs to be replaced, we recommend that it is replaced with a with a new 16 m long, 2230 mm x 1700 mm aluminized corrugated steel pipe arch complete with rip rap end walls with filter fabric underlay and a 7.3 m granular driveable top width.

Bridge No. 15: Station 2+359 1486044 Ontario Ltd. (Roll No. 570-45950)

A 7.7 m long, 2240 mm x 1630 mm corrugated steel pipe arch with bagged concrete end protection and a gravel driveway provides access to this property. A 7.3 m long culvert was shown at this location on the 1987 profile. This culvert was determined to have adequate capacity to convey the 2 year design storm.

We anticipate that this culvert will require replacement within the next 10 years or sooner if conditions warrant. We recommend that in the future the culvert be replaced with a new 16 m long, 2230 mm x 1700 mm aluminized corrugated steel pipe arch complete with rip rap end walls with filter fabric underlay, providing a minimum 7.3 m wide gravel surface.

Bridge No. 16: Station 2+445 1486044 Ontario Ltd. (Roll No. 570-45950)

A 7.7 m long, 2240 mm x 1630 mm corrugated steel pipe arch with bagged concrete end protection and a gravel driveway provides secondary access to this property. A culvert was not shown at this location on the profile in the 1987 report, its origin is unknown. This culvert was determined to have adequate capacity to convey the 2 year design storm.

We anticipate that this culvert will require removal within the next 10 years or sooner if conditions warrant. The access bridge serves as a secondary access to the farm. The property owner has requested that the culvert not be removed immediately, but removed once the bridge has reached the end of its serviceable life.

Bridge No. 17: Station 2+567 1486044 Ontario Ltd. (Roll No. 570-45930)

A 7.5 m long, 2240 mm x 1630 mm corrugated steel pipe arch with bagged concrete end protection and a gravel driveway provides access to this property. A 7.3 m long culvert was shown at this location on the 1987 profile. This culvert was determined to have adequate capacity to convey the 2 year design storm.

We anticipate that this culvert will require replacement within the next 10 years or sooner if conditions warrant. We recommend that in the future the culvert be replaced with a new 16 m long, 2230 mm x 1700 mm aluminized corrugated steel pipe arch complete with rip rap end walls with filter fabric underlay, providing a minimum 7.3 m wide gravel surface.

Bridge No. 18: 2034053 Ontario Ltd. Station 2+675 (Roll No. 570-45902)

A 7.6 m long, 2240 mm x 1630 mm corrugated steel pipe arch with bagged concrete end protection and a gravel driveway provides access to this property. A 7.3 m long culvert was shown at this location on the 1987 profile. This culvert was determined to have adequate capacity to convey the 2 year design storm.

We anticipate that this culvert will require replacement within the next 10 years or sooner if conditions warrant. We recommend that in the future the culvert be replaced with a new 16 m long, 2230 mm x 1700 mm aluminized corrugated steel pipe arch complete with rip rap end walls with filter fabric underlay, providing a minimum 7.3 m wide gravel surface.

Bridge No. 19: Station 3+167 Ryan A. LaBute (Roll No. 570-44000)

A 12 m long, 600 mm diameter corrugated steel pipe with rip rap/small concrete block end protection and a gravel driveway provides secondary access to this property. A culvert was not shown at this location on the profile in the 1987 report, its origin is unknown.

We recommend that this culvert be removed before work along the drain commences. This culvert is deficient in hydraulic capacity, and the property owner has requested that the culvert be removed since the primary access is available from Shawnee Road.

Bridge No. 20: Station 3+214 Town of Tecumseh (Shawnee Road)

A 12 m long 760 mm diameter corrugated steel pipe and asphalt roadway provides a road crossing. A 900 mm diameter corrugated steel pipe catch basin exists on the upstream end of the culvert on the east side of Shawnee Road. The outlet of the pipe on the west side of Shawnee Road has rip rap end protection. A culvert was shown at this location on the profile in the 1987 report. This culvert was determined to be in good condition, and to have adequate capacity to convey the flows expected to flow to this culvert during the 5 year design storm, which is considered appropriate for local road crossings. This assessment considers the limited capacity of the Shawnee Road Drain which consist of concrete tile with a maximum diameter of 300 mm diameter. The Shawnee Road Drain outlets into the upstream 900 mm diameter CSP catch basin of Bridge No. 20.

We anticipate that this culvert will require replacement within the next 10 years or sooner if conditions warrant. We recommend that in the future the culvert be replaced with a new 12 m long, 750 mm polymer laminated corrugated steel pipe complete, providing a minimum 6.0 m wide driveable asphalt surface. We recommend new rip rap end walls be installed on the downstream end of the culvert, and that the catch basin located on the upstream end be replaced and all existing pipes be reconnected to the new catch basin.

NextStar Battery Production Facility Working Corridor

Spreading of material will not be permitted over the lands south of the drain between Station 1+109 and Station 2+116 due to the change in land use. We recommend drain spoils be trucked away for the recommended works and for future maintenance at the cost of the abutting landowner. Alternatively, the abutting landowner may request that these drain spoils remain on-site.

Existing Conditions and Recommendations (Gouin Drain Branch North & South)

Landowners in the upper reaches of the drain within the residential subdivision are experiencing rear yard drainage issues, which may be in part due to the condition of the drain downstream and in part due to the poor condition of the portion of Gouin Drain that was altered during the Corbi Development in 1997. In addition, during the January 22, 2020 PIC, the residents noted that the rear yard drainage is not consistent. Some residents have catch basins along the drain, some have rear yard drainage installed during the subdivision construction and some have both. We recommend the existing Gouin Drain alignment, which exists within the rear yards of the properties fronting the east side of Corbi Lane, be abandoned and replaced by the existing storm sewers along Corbi Lane, as shown on the plans herein. We find the existing storm sewers to be incorporated as the new Gouin Drain alignment have hydraulic capacity to convey the 5 year design storm event.

To service the rear yards of the lands on the east side of Corbi Lane and on the west side of Shawnee Road, two new branch drains are proposed and shall henceforth be known as Gouin Drain Branch North and Gouin Drain Branch South. The north and south branch shall be located along the same alignment as the previous Gouin Drain.

The Gouin Drain Branch North shall drain northerly into the 1500 mm diameter municipal storm sewer beneath Gouin Street, and continue westerly, incorporating a section of 1500 mm diameter storm sewer. The north branch outlet will be to the Gouin Drain at MH1, as defined on the plans herein.

A gazebo and shed exist on the properties Mun. No. 1800 and 1806 Corbi Lane, respectively, which lie over the rear yard drain which consists of 300 mm dimeter and 1050 mm diameter pipe. We recommend the deteriorated 1050 mm diameter CSP remain in place, as not to disturb these overlying backyard structures, and a 300 mm diameter HDPE pipe be slip-lined through the 1050 mm diameter pipe for its entire length and the voids between the pipes be filled with non-shrink concrete grout. The concrete grout will prevent a full collapse of the deteriorated 1050 mm diameter pipe and help maintain the integrity of the foundations of the backyard structures.

In order to provide all lands along the drain access to the Gouin Drain Branch North, two additional catch basin structures are recommended on properties Mun. No. 1800 and 1806 Corbi Lane. The catch basin maintenance hole on property Mun. No. 1812 Corbi Lane will be required to be removed in order to slip-line the existing 1050 mm diameter pipe. For reconnection of the existing upstream 300 mm diameter pipe to the new 300 mm diameter slip-lined pipe, a new catch basin is required due to the vertical misalignment of the said pipes.

The existing 300 mm diameter HDPE pipe draining south across the rear yards of Mun. Nos. 1836, 1840, 1846 and 1852 is in good condition and it is recommended to be incorporated as Gouin Drain Branch South, including associated catch basins. Its outlet will be into the 600 mm diameter concrete drain as part of the upper portion of the existing Gouin Drain. No work is currently proposed for this drain.

Allowances

In accordance with Sections 29 and 30 of the Drainage Act, we have made a determination of the amount to be paid for damages to the lands and for land used for the establishment of a working corridor and a permanent 1.0 m wide grass buffer strip adjacent to both banks of open section of the drain. The average land cost for the surrounding area used to calculate the value of land

used is $49,400 per hectare. Section 29 allowances total $5,650.00. Section 29 allowances have not been provided for works completed on either Gouin Drain Branch South or Gouin Drain Branch North because the legal alignment of the drain had already been established on these lands. Likewise, no Section 29 allowances have been provided for the working corridor where historical drainage reports show allowances have already been provided.

Throughout the length of the work, the excavated material is to be disposed of as set out in the Special Provisions in Schedule 'F' herein. In accordance with Section 30 of the Drainage Act, we determined the amount to be paid to the owners for damages to lands and crops (if any) occasioned by the operation of equipment and the disposal of material excavated from the drain. In general, a 9 metre working corridor off of the drain top of bank has been considered for open drain, and a 6 metre working centered over closed drain. The allowance for damages is calculated at a rate of $3,707 per hectare, ($1,500 per acre). A secondary working corridor has also been specified to provide access to drain repairs and have been calculated at a half rate, equivalent to $1,854 per hectare ($750 per acre). Section 30 allowances total $2,500.00. Backyards that are to be disturbed from the recommended works are to be restored, as such no Section 30 allowances have been provided.

Cost Estimate

Based on our review of the history, the information obtained during the site meetings and our examination and analysis of the survey data, we recommend that the Gouin Drain and Gouin Drain Branch North & South be repaired and improved as described below:

Item	Description	Amount
	GOUIN DRAIN	
	OPEN DRAIN WORK	
1.	Brushing of the drain including the disposal by burning on-site or removal off-site with trimming and/or removal of existing trees as required to accommodate the drainage works, as follows:	
	a) Light brushing between Stations 0+000 and 0+400, Stations 0+520 and 0+670, and Stations 1+032 and 2+116. Work includes	$10,600.00

Item	Description	Amount
	temporary removal of approximately 210 metres of chain-link fence to access the drain, and restoration to existing conditions.	
	b) Medium brushing between Stations 2+116 and 2+758 (completed August 2020). ***This item has been completed by the Town. It is not to be included when tendering the work for construction.***	$6,500.00
2.	Excavation, levelling, and trucking of excavated materials works, as follows:	
	a) Drain deepening, as follows:	
	i) Station 0+172 to Station 1+010, totalling approximately 838 lineal metres of drain and approximately 1,600 m^3 of material.	$21,600.00
	b) Excavation of drain bottom only, as follows:	
	i) Station 1+010 to Station 2+758, totalling approximately 1,748 lineal metres of drain and approximately 1,390 m^3 of material.	$18,750.00
	ii) Station 3+128 to Station 3+208, totalling approximately 80 lineal metres of drain and approximately 25 m^3 of material.	$700.00
	c) Trucking and disposal of excavated materials off-site, as follows:	
	i) Stations 1+109 to Station 2+116, totalling approximately 880 m^3 of material.	$35,200.00
	ii) Stations 3+128 to Station 3+208, totalling approximately 25 m^3 of material.	$1,000.00
	d) Levelling of excavated materials, as follows:	
	i) Station 1+010 to Station 1+109, totalling approximately 99 lineal metres of drain and approximately 10 m^3 of material.	$250.00

Item	Description	Amount
	ii) Station 2+116 to Station 2+758, totalling approximately 642 lineal metres of drain and approximately 500 m^3 of material.	$2,750.00
3.	Seeding of grass buffer strips, as follows:	
	a) Seeding of 1.0 m wide grass buffer strip beyond the top of bank on the south side of the drain from Station 1+032 to Station 2+107 (approximately 1,080 m^2).	$6,100.00
	b) Seeding of 1.0 m wide grass buffer strip beyond the top of bank on the north and south side of the drain from Station 2+122 to Station 2+680 (approximately 1,120 m^2).	$6,300.00
	c) Seeding of 1.0 m wide grass buffer strip beyond the top of bank on the west side of the drain from Station 2+680 to Station 2+758 (approximately 80 m^2).	$450.00
	d) Seeding of 1.0 m wide grass buffer strip beyond the top of bank on the north and south side of the drain from Station 3+128 to Station 3+208 (approximately 160 m^2).	$900.00
4.	Private access bridge cleaning works, as follows:	
	a) Bridges No. 6, 7, 14, 15,16, 17, 18	$7,000.00
5.	Removal of access bridges, as follows:	
	a) Bridge No. 8 – Station 1+278 – City of Windsor (Roll No. 090-040-00103) – The work is to include removal and disposal of existing 9.7 m long, 2240 mm x 1630 mm corrugated steel pipe arch as well as the existing bagged concrete headwalls and gravel driveway. Complete with grading and seeding of the drain banks, site clean-up and restoration within the working area.	$2,500.00
	b) Bridge No. 9 – Station 1+442 – City of Windsor (Roll No. 090-040-00103) – The	$2,500.00

Item	Description	Amount
	work is to include removal and disposal of existing 8.2 m long, 2240 mm x 1630 mm corrugated steel pipe arch as well as the bagged concrete headwalls and gravel driveway. Complete with grading and seeding of the drain banks, site clean-up and restoration within the working area.	
	c) Bridge No. 10 – Station 1+646 – City of Windsor (Roll No. 090-040-00103) – The work is to include removal and disposal of existing 7.8 m long, 2240 mm x 1630 mm corrugated steel pipe arch as well as the existing concrete headwalls and gravel driveway. Complete with grading and seeding of the drain banks, site clean-up and restoration within the working area.	$2,500.00
	d) Bridge No. 19 – Station 3+167 – Ryan A. LaBute (Roll No. 570-44000) – The work is to include removal and disposal of existing 12 m long, 600 mm diameter corrugated steel pipe as well as the existing with rip rap and gravel driveway. Complete with grading and seeding of the drain banks, site clean-up and restoration within the working area.	$1,500.00
6.	Stone erosion protection (SEP) works, as follows:	
	a) Station 1+104 – Supply and install 10 m^2 (300 mm thick) of stone erosion protection (SEP) including new filter fabric underlay at the location of surface inlet swale on south side.	$800.00
	b) Station 1+376 – Supply and install 15 m^2 (300 mm thick) of stone erosion protection (SEP) including new filter fabric underlay at the location of surface inlet swale on south side.	$1,250.00

Item	Description	Amount
	c) Station 1+549 – Supply and install 10 m^2 (300 mm thick) of stone erosion protection (SEP) including new filter fabric underlay at the location of surface inlet swale on south side.	$800.00
	d) Station 1+751 – Supply and install 10 m^2 (300 mm thick) of stone erosion protection (SEP) including new filter fabric underlay at the location of surface inlet swale on south side.	$800.00
	e) Station 2+162 – Supply and install 5 m^2 (300 mm thick) of stone erosion protection (SEP) including new filter fabric underlay at the location of surface inlet swale on south side.	$450.00
	f) Station 2+275 – Supply and install 20 m^2 (300 mm thick) of stone erosion protection (SEP) including new filter fabric underlay at the location of surface inlet swale on north and south side.	$1,600.00
	g) Station 2+363 – Supply and install 20 m^2 (300 mm thick) of stone erosion protection (SEP) including new filter fabric underlay at the location of surface inlet swale on north and south side.	$1,600.00
	h) Station 2+452 – Supply and install 30 m^2 (300 mm thick) of stone erosion protection (SEP) including new filter fabric underlay at the location of surface inlet swale on north and south side.	$2,400.00
	i) Station 2+572 – Supply and install 30 m^2 (300 mm thick) of stone erosion protection (SEP) including new filter fabric underlay at the location of surface inlet swale on north and south side.	$2,400.00
7.	Temporary Silt Control Measures During Construction	$1,200.00

Item	Description	Amount
	SUB-TOTAL – EXCLUDING SECTION 26 COSTS	**$140,400.00**
8.	Allowances under Sections 29 and 30	$8,150.00
9.	Survey, Report, Assessment and Final Inspection (cost portion)	
	a) Soil Characterization Report and Environmental Review	$29,600.00
	b) Future replacements	$15,000.00
	c) Survey, remainder of report, final inspection	$37,100.00
10.	Expenses and incidentals (cost portion)	$1,800.00
11.	ERCA application review and permit fee	$800.00
	TOTAL – EXCLUDING SECTION 26 COSTS	**$232,850.00**
	SECTION 26 NON PRO-RATEABLE COSTS	
12.	Trucking of excavated materials works, as follows:	
	a) Trucking and landfilling of contaminated excavated materials off-site, as follows:	
	i) Station 0+162 to Station 0+250, totalling approximately 45 m^3 of material.	$6,450.00
	ii) Station 0+470 to Station 1+010, totalling approximately 1,005 m^3 of material.	$143,000.00
	b) Trucking of excavated materials off-site to a site capable of receiving soils meeting the Table 3.1 RPI and/or 3.1 ICC ESWS that has a salt-parameter exemption, as follows:	
	i) Station 0+250 to Station 0+470, totalling approximately 550 m^3 of material.	$22,000.00
13.	Stone erosion protection (SEP) works, as follows:	
	a) Station 0+098 – Supply and install 15 m^2 (300 mm thick) of stone erosion protection (SEP) including new filter fabric underlay at the location of washout on south drain bank.	$1,250.00
14.	Road bridge cleaning works, as follows:	
	a) Cleaning of Bridge No. 5 – Station 1+020 19	$1,000.00

Item	Description	Amount
	m long, 1520 mm diameter corrugated steel pipe (CSP) road culvert.	
	b) Cleaning of Bridge No. 13 – Station 2+116 15.6 m long, 2230 mm x 1700 mm corrugated steel pipe arch (CSPA) road culvert.	$500.00
	c) Cleaning of Bridge No. 20 – Station 3+214 12 m long, 760 mm diameter corrugated steel pipe (CSP) road culvert.	$500.00
15.	Bridge works, as follows:	
	a) Bridge No. 1 – Station 0+200 (Enbridge Gas, Enwin Water & Bell Canada) – Removal and disposal of existing 28 m long twin 1370 mm x 1000 mm CSPA, existing end walls and backfill off-site that are not suitable for native backfill. Installation of a new 32 m long, 2500 mm x 1830 mm corrugated steel pipe arch (CSPA). Clear stone bedding material beneath pipe minimum 150 mm thickness, up to pipe springline (approximately 110 tonnes). Clean native or imported clean native backfill material from springline of pipe culvert to the underside of grassed driveway (approximately 300 m^3). Topsoil (approximately 15 m^3), fine grading and seeding (approximately 230 m^2). Sloping stone end walls and lining of drain bottom with stone erosion protection to allow for excavation below proposed grade line at upstream and downstream ends of culvert (approximately 130 m^2). Removal and restoration of fence to existing conditions. Cost includes installation of all necessary supports for existing utilities necessary	$86,000.00

Item	Description	Amount
	during construction and third party inspection.	
	b) Bridge No. 3 – Station 0+825 (Enwin Powerlines) – Removal and disposal of existing 7 m long, twin 1520 mm x 1160 mm CSPA, existing end walls and backfill off-site that are not suitable for native backfill. Installation of a new 16 m long, 2500 mm x 1830 mm corrugated steel pipe arch (CSPA). Clear stone bedding material minimum 150 mm beneath pipe, up to pipe springline (approximately 75 tonnes). Granular 'B' backfill up to the underside of Granular 'A' driveway material (approximately 115 tonnes). Native material backfill beyond edges of driveway to construct the 0.5 m wide native buffer strips (approximately 30 m^3). Granular 'A' (crushed limestone) compacted driveway surface, minimum 200 mm thickness (approximately 40 tonnes). Sloping stone end walls and lining of drain bottom with stone erosion protection to allow for excavation below proposed grade line at upstream and downstream ends of culvert (approximately 85 m^2).	$47,100.00
16.	Bridge repairs, as follows:	
	a) Bridge No. 4 – Station 0+958 (City of Windsor) – Lining of drain bottom and drain banks on downstream and upstream ends of bridge where drain bottom falls below design grade using stone erosion protection (300 mm thickness) (approximately 260 m^2) to be embedded into drain bottom.	$20,600.00
17.	Removal of access bridges, as follows:	

Item	Description	Amount
	a) Bridge No. 2 – Station 0+534 – Removal and disposal of existing 6 m long twin 1900 mm x 1050 mm CSPA, existing end walls and backfill off-site. Complete with grading and seeding of the drain banks, site clean-up and restoration within the working area.	$2,500.00
	SUB-TOTAL – SECTION 26 NON PRO-RATEABLE COSTS	**$330,900.00**
18.	Survey, Daylighting Investigation, Report, Future Replacements, Assessment & Final Inspection (cost portion) ***This item has been completed by the Town. It is not to be included when tendering the work for construction.***	$97,100.00
	TOTAL – SECTION 26 NON PRO-RATEABLE COSTS	**$428,000.00**
	TOTAL ESTIMATE – GOUIN DRAIN	**$660,850.00**

Item	Description	Amount
	GOUIN DRAIN BRANCH NORTH	
	CLOSED DRAIN WORK	
1.	Work required within property Municipal No. 1800 Corbi Lane includes:	
	a) Station 0+091A - Supply and installation of one (1) new 600 mm x 600 mm precast concrete catch basin (denoted CB1) complete with cast iron heavy-duty grate as manufactured by Coldstream Concrete (or approved equal) and a minimum 300 mm deep sump. The grates shall be equipped with fasteners to secure grates to catch basins as supplied by the manufacturer. Work to include connection of all new and existing pipes and grouting of all voids	$2,500.00

Item	Description	Amount
	around pipes with non-shrink concrete grout.	
	b) Station 0+079A to Station 0+091A - Supply and install approximately 12 metres of 300 mm diameter solid corrugated high density polyethylene (HDPE), smooth wall, 320 kPa pipe (Boss 2000 or approved equal) with bell and spigot joining system. Join pipe with existing 300 mm diameter HDPE pipe with Fernco coupler (or approved equal). Granular 'B' bedding beneath pipe, minimum 150 mm thickness and backfill up to springline of pipe (approximately 10 tonnes). Clean native backfill material from Granular 'B' to underside of top soil (approximately 27 m^3). Minimum 50 mm thick layer of top soil above native material, fine grade and seed. Work includes removal and disposal of existing 12 metre (approx.) 1050 mm diameter corrugated steel pipe (CSP). The Contractor shall supply and install temporary construction fencing along the designated working corridor.	$6,300.00
	c) Reinstatement of fence and restoration of all disturbed areas to existing conditions.	$950.00
2.	Work required within property Municipal No. 1806 Corbi Lane includes:	
	a) Station 0+112.5A - Supply and installation of one (1) new 600 mm x 600 mm precast concrete catch basin (denoted CB2) complete with cast iron heavy-duty grate as manufactured by Coldstream Concrete (or approved equal) and a minimum 300 mm deep sump. The grates shall be equipped with fasteners to secure grates to catch	$3,000.00

Item	Description	Amount
	basins as supplied by the manufacturer. Remove and dispose a portion of existing 1050 mm diameter corrugated steel pipe (CSP) to accommodate installation of CB2. Work includes connection of all new and existing pipes and grouting of all voids around pipes with non-shrink concrete grout.	
	b) Station 0+091A to Station 0+112.5A - Supply and install approximately 21.5 metres of 300 mm diameter polyethylene (PE), smooth wall pipe. Work includes slipping new 300 mm diameter PE pipe into existing 1050 mm diameter corrugated steel pipe (CSP). The Contractor shall supply and install temporary construction fencing along the designated working corridor.	$5,300.00
	c) Reinstatement of fence and restoration of all disturbed areas to existing conditions.	$1,150.00
3.	Work required within property Municipal No. 1812 Corbi Lane includes: a) Station 0+133A – Remove and dispose of existing catch basin maintenance hole. Supply and installation of one (1) new 600 mm x 600 mm precast concrete catch basin (denoted CB3) complete with cast iron heavy-duty grate as manufactured by Coldstream Concrete (or approved equal) and a minimum 300 mm deep sump. The grates shall be equipped with fasteners to secure grates to catch basins as supplied by the manufacturer. Remove and dispose a portion of existing 1050 mm diameter corrugated steel pipe (CSP) to accommodate installation of CB3.	$2,750.00

Item	Description	Amount
	Work includes connection of all new and existing pipes and grouting of all voids around pipes with non-shrink concrete grout.	
	a) Station 0+112.5A to Station 0+133A - Supply and install approximately 20.5 metres of 300 mm diameter solid corrugated high density polyethylene (HDPE), smooth wall, 320 kPa pipe (Boss 2000 or approved equal) with bell and spigot joining system. Work includes slipping new 300 mm diameter HDPE pipe into existing 1050 mm diameter corrugated steel pipe (CSP). The Contractor shall supply and install temporary construction fencing along the designated working corridor.	$3,200.00
	b) Reinstatement of fence and restoration of all disturbed areas restored to existing conditions.	$750.00
	SUB-TOTAL – EXCLUDING NON PRO-RATEABLE COSTS	**$25,900.00**
4.	CCTV and works related to inspection of enclosed portion of the Gouin Drain, including flushing. ***This item has been completed by the Town. It is not to be included when tendering the work for construction.***	$7,250.00
5.	Survey, Report, Assessment and Final Inspection (cost portion)	$6,350.00
6.	Expenses and incidentals (cost portion)	$500.00
	TOTAL – EXCLUDING NON PRO-RATEABLE COSTS	**$40,000.00**
	NON PRO-RATEABLE COSTS	
7.	Injection of non-shrink concrete grout to fill voids between the existing 1050 mm diameter	$24,400.00

Item	Description	Amount
	corrugated steel pipe (CSP) and new 300 mm diameter high density polyethylene (HDPE) pipe between Station 0+091A and Station 0+133A (approximately 88 tonnes), ensuring the HDPE pipe does not shift within the CSP.	
	SUB-TOTAL – NON PRO-RATEABLE COSTS	**$24,400.00**
8.	Survey, Report, Assessment & Final Inspection (cost portion)	$3,650.00
	TOTAL – NON PRO-RATEABLE COSTS	**$28,050.00**
	TOTAL ESTIMATE – GOUIN DRAIN BRANCH NORTH	**$68,050.00**

Item	Description	Amount
	GOUIN DRAIN BRANCH SOUTH	
1.	Survey, Report, and Assessments	$5,000.00
2.	Flushing of enclosed drain ***This item has been completed by the Town. It is not to be included when tendering the work for construction.***	$1,950.00
	TOTAL ESTIMATE – GOUIN DRAIN BRANCH SOUTH	**$6,950.00**
	GRAND TOTAL ESTIMATE	**$736,350.00**

The estimate provided in this report was prepared according to current materials and installation prices as of the date of this report. In the event of delays from the time of filing of the report by the Engineer to the time of tendering the work, it is understood that the estimate of cost is subject to inflation. The rate of inflation shall be calculated using the Consumer Price Index applied to the cost of construction from the date of the report to the date of tendering.

Should the Road Authority elect to construct the drainage works across their road right-of-ways (Section 26 increased cost items) with their own forces, as per Section 69 of the Drainage Act, R.S.O., 1990, the Road Authority shall

remain responsible for their allotment of costs for the preparation of this report as outlined in our estimate. Should the Road Authority elect not to undertake this work, the work items, as noted under Section 26 above, should be kept separate when tendering out the entire drainage works.

Assessment of Costs

The individual assessments are comprised of three (3) assessment components:

i. Benefit (*advantages relating to the betterment of lands, roads, buildings, or other structures resulting from the improvement to the drain).*

ii. Outlet Liability *(part of cost required to provide outlet for lands and roads).*

iii. Special Benefit *(additional work or feature that may not affect function of the drain).*

Assessment Rationale - Gouin Drain Improvements

We have assessed the above estimated costs for the repair and improvement of the Gouin Drain against the affected lands and roads listing in Schedule 'C-1' under 'Benefit' and 'Outlet Liability'.

The above estimated costs have been assessed 25% as a Benefit assessment and 75% as an Outlet Liability assessment against all upstream lands and roads within the drainage area. This split was established in the 1987 report. Special Benefit assessments shown in Schedule 'C-1' and detailed in Schedule 'D-1' were derived as follows:

1. For tile main outlet repairs including stone erosion protection as required, at the location of the said main tile outlets, the Drainage Superintendent and/or Engineer may direct the contractor to make these repairs at the expense of the landowner. Private tile repairs shall be assessed 100% against the property on which the said tile exists.
2. Bank failure repairs caused by surface water inlets along the drain shall be assessed 100% to the abutting landowner. Where the surface water inlet is abutted by two properties, the cost of said repair shall be assessed 50% to each of the abutting landowners.

3. All increased costs borne from the need to truck and dispose of excavated material off-site, or to truck excavated material within the working corridor, have been assessed to the abutting landowner.

We have assessed residential lands within the Gouin Drain drainage area of Concession 2, Lots 148, 149, and 150 as a block assessment, denoted as Block 'A.'

We have assessed the residential land within the Gouin Drain drainage area of Concession 1, Lots 124 and 126 as a block assessment, denoted as Block 'E.'

Assessment Rationale for Special Benefit Assessments (Bridges)

Special Benefit assessment shown in Schedule 'C-1' and detailed in Schedule 'D-1' were derived as follows:

1. Costs associated with the replacement of Bridge No. 1 has been assessed equally between Bell Canada (25%), Enbridge Gas (25%), Enwin Water (25%), and Enwin Powerlines (25%) and shall be a non-proratable assessment.
2. Costs associated with work for the removal of Bridge No. 2 have been assessed to the City of Windsor (100%) and shall be a non-proratable assessment.
3. Costs associated with work for the replacement of Bridge No. 3 have been assessed to Enwin Powerlines (100%) and shall be a non-proratable assessment.
4. An engineering cost portion of $2,500.00 each for the design provisions on the future replacement of primary access Bridge Nos. 6, 14, 15, 17, & 18 has been assessed 50% against the abutting property and the remaining 50% as an Outlet assessment to the upstream lands and roads.
5. An engineering cost portion of $2,500.00 each for the design provisions on the future replacement of Bridge No. 7 & 12 has been assessed 100% against the abutting property.
6. An engineering cost portion of $3,500.00 each for the design provisions on the future replacement of Bridge No. 5 (Anchor Drive), Bridge No. 13 (Banwell Road), and Bridge No. 20 (Shawnee Road) has been assessed

100% against the owning Road Authorities under Section 26 of the Drainage Act and shall be a non-proratable assessment.

7. Costs associated with the removal of Bridge Nos. 8, 9 & 10 have been assessed to the abutting properties (City of Windsor) and shall be a non-proratable assessment.
8. Costs associated with the removal of Bridge No. 19 have been assessed to Roll No. 570-44000 (Ryan A. LaBute) and shall be a non-proratable assessment.

Assessment Rationale - Gouin Drain Branch North Improvements

We have assessed the above estimated costs for the repair and improvement of the Gouin Drain Branch North against the affected lands and roads listing in Schedule 'C-2' under 'Benefit' and 'Outlet Liability'.

The above estimated costs have been assessed 50% as an Outlet Liability assessment against all upstream lands and roads within the drainage area, and 50% Benefit assessment against the lands fronting the portion of drain requiring repair. Special Benefit assessments shown in Schedule 'C-2' and detailed in Schedule 'D-2' were derived as follows:

1. Increased costs associated with the replacement and rehabilitation of the existing 1050 mm diameter corrugated steel pipe (CSP) underneath the existing private structures positioned over the drain have been assessed to the Town of Tecumseh (100%). The supply and installation of non-shrink concrete grout to fill voids between existing 1050 mm diameter CSP and the proposed 300 mm diameter polyethylene (PE) pipe, as well as the CCTV inspection (excluding drain flushing costs) have been assessed as a non-proratable assessment. The remainder of the increased costs as a result of working within residential lands include pipe installation, temporary construction fencing, and restoration of landscaping damaged by the proposed works.

Assessment Rationale - Gouin Drain Branch South Improvements

We have assessed the above estimated costs for the engineering fees and the previously completed drain flushing work associated with the Gouin Drain Branch South against the affected lands and roads listing in Schedule 'C-3' under 'Benefit' and 'Outlet Liability'.

The above estimated costs have been assessed 50% as an Outlet Liability assessment against all upstream lands within the drainage area and 50% as a Benefit assessment. All lands within the Gouin Drain Branch South drainage area have been assessed as block assessments, denoted Block 'D.'

Utilities

It may become necessary to temporarily or permanently relocate utilities that may conflict with the construction recommended under this report. In accordance with Section 26 of the Drainage Act, we assess any relocation cost against the public utility having jurisdiction. Under Section 69 of the Drainage Act, the public utility is at liberty to do the work with its own forces, but if it should not exercise this option within a reasonable time, the Municipality will arrange to have this work completed and the costs will be charged to the appropriate public utility.

Future Maintenance (Gouin Drain within Town of Tecumseh Sta. 2+162 to Sta. 3+286)

After completion, the Gouin Drain shall be maintained by the Town of Tecumseh at the expense of the lands and road herein assessed in Schedule 'E-1', and in the same relative proportions subject, of course, to any variations that may be made under the authority of the Drainage Act. The assessments are based on an arbitrary amount of $10,000.00.

Future Maintenance (Gouin Drain within City of Windsor Sta. 0+000 to Sta. 2+162)

After completion, the Gouin Drain shall be maintained by the City of Windsor at the expense of the lands and road herein assessed in Schedule 'E-2', and in the same relative proportions subject, of course, to any variations that may be made under the authority of the Drainage Act. The assessments are based on an arbitrary amount of $10,000.00.

The cost associated with trucking and disposal of the drain between Station 1+109 to Station 2+116 is to be assessed 100% to the abutting landowner.

Future Maintenance (Private Access Bridges within Town of Tecumseh)

We recommend that future work of repair and maintenance of the Gouin Drain private access bridges be carried out by the Town of Tecumseh at the expense of the property or properties accessed by the bridge and of the lands

and roads shown in Schedule 'E-3,' but only to those properties located upstream of each bridge.

Part of the maintenance cost of each bridge will be assessed as a Special Benefit assessment against the property or properties served by the bridge as outlined in the table below. The remainder of the maintenance cost will be assessed as Outlet assessment only to the lands and roads upstream of each bridge prorated to the assessments shown in Schedule 'E-3.'

Schedule 'E-3' represents all the lands and roads upstream of Bridge No. 14 and is applicable to other primary access bridges located further upstream by including only those properties that are upstream of the said bridge. The assessment is based on an arbitrary amount of $10,000.00 of future access bridge maintenance costs.

The future removal cost for Bridge No. 16, will be assessed 100% to the land owner.

Future Maintenance (Private Access Bridges within City of Windsor)

We recommend that future work of repair and maintenance of the Gouin Drain private access bridges be carried out by the City of Windsor at the expense of the property or properties accessed by the bridge and of the lands and roads shown in Schedule 'E-4,' but only to those properties located upstream of each bridge.

Part of the maintenance cost of each bridge will be assessed as a Special Benefit assessment against the property or properties served by the bridge as outlined in the table below. The remainder of the maintenance cost will be assessed as Outlet assessment only to the lands and roads upstream of each bridge prorated to the assessments shown in Schedule 'E-4.'

Schedule 'E-4' represents all the lands and roads upstream of Bridge No. 6 and is applicable to other primary access bridges located further upstream by including only those properties that are upstream of the said bridge. The assessment is based on an arbitrary amount of $10,000.00 of future access bridge maintenance costs.

As per City of Windsor Council Resolution CR388/2007 and in accordance with the City of Windsor Act, assessments of cost to landowners for the maintenance of the Gouin Drain, excluding bridges, will be paid for from the

City of Windsor general tax or sewer surcharge levy provided excavated material may be spread on the abutting lands. Costs assessed to landowners within the City of Windsor for bridge maintenance will be paid by the benefiting landowner according to this report.

The division between Special Benefit and Outlet assessment for each bridge shall be as follows:

Bridge No.	Type	Owner(s)	Special Benefit	Outlet
		City of Windsor		
1	Utility Access	Bell Canada (Section 26) Enbridge Gas (Section 26) Enwin Water (Section 26) Enwin Powerlines (Section 26)	25% 25% 25% 25%	0%
3	Utility Access	Enwin Powerlines (Section 26)	100%	0%
4	Road	City of Windsor Road Authority (Section 26)	100%	0%
5	Road	City of Windsor Road Authority (Section 26)	100%	0%
6	Primary	Gary Barbesin Roll No. 070-650-01303	50%	50%
7	Secondary	Jamison Laboratories Ltd Roll No. 070-650-01351	100%	0%
13	Road	City of Windsor Road Authority (Section 26)	100%	0%
		Town of Tecumseh		
14	Primary	507822 Ontario Inc. First Mirage Management Inc. Roll No. 570-46201	50%	50%
15	Primary	1486044 Ontario Ltd. Roll No. 570-45950	50%	50%
16	Secondary	1486044 Ontario Ltd. Roll No. 570-45950	100%	0%
17	Primary	1486044 Ontario Ltd. Roll No. 570-45930	50%	50%

18	Primary	2034053 Ontario Ltd. Roll No. 570-45902	50%	50%
20	Road	Town of Tecumseh Road Authority (Section 26)	100%	0%

Future Maintenance (Gouin Drain Branch North)

The Gouin Drain Branch North shall be maintained by the Town of Tecumseh at the expense of the lands and roads herein assessed according to the following:

- Cost of future work completed between Station 0+000A and Station 0+064A, shall be herein assessed in Schedule 'E-5' and in the same relative proportions subject to any variations that may be made under the authority of the Drainage Act. The assessments are based on an arbitrary amount of $10,000.00.
- Cost of future work completed between Station 0+064A and Station 0+198A shall be herein assessed in the same relative proportions as shown in Schedule 'E-6.' This is subject, of course, to any variations that may be made under the authority of the Drainage Act. The assessments are based on an arbitrary amount of $10,000.00.

The drainage area of Gouin Drain Branch North includes residential lands and roads that are serviced by a municipal storm sewer network that discharges into the drain at MH5 (Station 0+064A). All upstream lands and roads have been included as a block assessment denoted Block 'B' for the purposes of future assessment of the section of drain downstream of Station 0+064A.

Future Maintenance (Gouin Drain Branch South)

The Gouin Drain Branch South shall be maintained by the Town of Tecumseh at the expense of the lands herein assessed in Schedule 'E-7,' and in the same relative proportions subject to any variations that may be made under the authority of the Drainage Act.

Drawings and Specifications

Attached to this report is Schedule 'F', which are Specifications setting out the details of the recommended works and Schedule 'G' which represent the drawings that are attached to this report.

Page 1 of 21 – Overall Watershed Plan
Page 2 of 21 – Plan A & B
Page 3 of 21 – Plan C
Page 4 of 21 – Plan D
Page 5 of 21 – Plan E
Page 6 of 21 – Profile Station 0+000 to Station 1+010
Page 7 of 21 – Profile Station 1+010 to Station 2+160
Page 8 of 21 – Profile Station 2+160 to Station 3+286
Page 9 of 21 – Profile Gouin Drain Branch North
Page 10 of 21 – Profile Gouin Drain Branch South & Branch Drain Details
Page 11 of 21 – Cross Sections Station 0+000 to Station 1+010
Page 12 of 21 – Cross Sections Station 1+010 to Station 3+286
Page 13 of 21 – Bridge Design Information
Page 14 of 21 – Bridge No. 1 Replacement
Page 15 of 21 – Bridge No. 3 Replacement
Page 16 of 21 – Future Bridge No. 5 Replacement
Page 17 of 21 – Future Bridge No. 7 Replacement
Page 18 of 21 – Future Bridge No. 6, 14, 15, 17, 18 Replacement
Page 19 of 21 – Future Bridge No. 13 Replacement
Page 20 of 21 – Future Bridge No. 20 Replacement
Page 21 of 21 – Miscellaneous Details

Approvals

The construction and/or improvement to a drainage works, including repair and maintenance activities, and all operations connected therewith are subject to the approval, inspection, by-laws and regulations of all Municipal, Provincial, Federal and other authorities having jurisdiction in respect to any matters embraced by the proposed works. Prior to any construction or maintenance works, the Municipality or proponent designated on the Municipality's behalf shall obtain all required approvals/permits and confirm any construction limitations including timing windows, mitigation/off-setting measures, standard practices or any other limitations related to in-stream works.

Grants

In accordance with the provisions of Sections 85, 86 and 87 of the Drainage Act, a grant in the amount of 33–1/3 percent of the assessment eligible for a grant may be made in respect to the assessment made under this report upon privately owned lands used for agricultural purposes. The assessments levied against privately owned agricultural land must also satisfy all other eligibility criteria set out in the Agricultural Drainage Infrastructure Program policies. Most of the privately owned lands are used for agricultural purposes and are eligible under the A.D.I.P. policies. We are not aware of any lateral drains involved in this work that would not be eligible for a grant. We recommend that application be made to the Ontario Ministry of Agriculture and Food in accordance with Section 88 of the Drainage Act, for this grant, as well as for all other grants for which this work may be eligible.

Respectfully submitted,

DILLON CONSULTING LIMITED

Mark D. Hernandez, P.Eng.

MDH:jrb

Our File: 17-6773

SCHEDULE "A-1"

MEETING MINUTES

DILLON CONSULTING

Subject:	Gouin Drain- Onsite Meeting Minutes
Date and Time:	Thursday February 8th 2018
Location:	Town of Tecumseh Council Chambers, 917 Lesperance Rd, Town of Tecumseh
Our File:	17-6773

Attendees

Mark Hernandez	Dillon Consulting
Sam Paglia	Town of Tecumseh

Sign-in sheet attached

Notes

Item	Discussion	Action By
1.	**General Information Regarding The Drainage Act**	
	• The Drainage act is a Provincial Act that is the responsibility of the municipal government to implement	**INFO.**
	• The act is over 100 years old and can be found on E-Laws	**INFO.**
	• The Act is a user based system, this is dissimilar to municipal sewers.	**INFO.**
	• The drainage process is as follows: ○ A request is submitted ○ The Engineer is appointed by the Municipality ○ Site Meeting held ○ Survey is completed ○ The Report is prepared ○ PIC is held (not required by the Act) ○ A meeting is set for Consideration (technical aspects of report) ○ Court of Revisions (cost aspects of report)	**INFO.**
	• The purpose of the site meeting is to gather information from landowners who can provide feedback about the performance of the drain as well as provide other information regarding the drain and watershed.	**INFO.**

2. Payment

- Drain Cleanouts **INFO.**
  - These costs are typically assessed for benefit and outlet per the act. The assessment is based on how much water is sent down the drain and how much of the drain is used.
- Culvert Replacements **INFO.**
  - When a replacement culverts is required the cost assessment is usually split 50/50.
  - If a new culvert is required the landowner is typically assessed 100% of the cost.
- Special Benefit Assessment **INFO.**
  - These are items that do not affect the function of the drain, these items could include: different headwalls, longer pipes, etc.
- The Engineer determines the assessment. Each assessment will include details for each property that falls within the watershed. **INFO.**
- Grants are available for properties that have a "Farm Class Tax Rate" **INFO.**
- The municipality will bill the landowners after the work is complete for their net assessment. **INFO.**

3. Report Expectations

- All landowners will receive copies of the draft report with their notice for the PIC, Meeting to Consider and the Court of Revision. Reports generally contain: **INFO.**
  - Background information about the request
  - History on the drain
  - Watershed
  - Drawings
  - Design considerations
  - Recommended work
  - Cost estimate
  - Meeting Minutes
  - Assessments including future maintenance provisions
  - Specifications

4. Affects during Construction

- Typically only landowners along the drain will be affected by construction. **INFO.**
  - Working corridors are defined within the report.
- Work shall result in creating either the same or better level or **INFO.**

service. **INFO.**

- The quality of work is typically monitored during construction by the Drainage Superintendent.
  - The engineer is required to complete a final inspection.

5. Environmental Requirements

- Department of Fisheries and Oceans, Ministry of Natural Resources and Forestry and Essex Regional Conservation Authority, regulations must be followed and permits obtained by the municipality as required. **INFO.**

6. Next Steps

- Topographical survey will be completed and then the preparation of the report will commence **INFO.**
- PIC Meeting will be held. A notice and draft report will be provided in advance. **INFO.**
- Board Meetings **INFO.**

7. Question from landowner

1. Nature of request- request came from upstream landowners who have concerns with respect to the standing water/poor performance of the drain **INFO.**
2. Can upstream section of the Gouin Drain in the residential area be abandoned? - The municipal drain allows for the right to access and maintain the drain. The municipality does not have the easements/access rights required to complete this work if the drain is abandoned.

Errors and/or Omissions

These minutes were prepared by Kristine Wilkinson E.I.T., who should be notified of any errors and/or omissions.

SCHEDULE "A-2"

MEETING MINUTES

Subject:	Gouin Drain- Onsite Meeting Minutes
Date and Time:	Friday April 6th 2018
Location:	Town of Tecumseh Council Chambers, 917 Lesperance Rd, Town of Tecumseh
Our File:	17-6773

Attendees

Mark Hernandez	Dillon Consulting
Kristine Wilkinson	Dillon Consulting
Sam Paglia	Town of Tecumseh
Anna Godo	City of Windsor

Notes

Item	Discussion	Action By
1.	**This meeting was held specifically for the benefit of landowners within the City of Windsor, who had not received a copy of the invitation for the 8 February 2018 meeting. No landowners attended the meeting.**	**INFO.**

Errors and/or Omissions

These minutes were prepared by Kristine Wilkinson E.I.T., who should be notified of any errors and/or omissions.

SCHEDULE "A-3"

MEETING MINUTES

DILLON CONSULTING

Subject: Gouin Drain Branch North & South - Onsite Meeting Minutes

Date and Time: 5:30 pm, Wednesday January 22nd, 2020

Location: Tecumseh Arena, Horwood Room, 12021 McNorton Street, Tecumseh, Ontario

Our File: 17-6773

Attendees

Mark Hernandez	Dillon Consulting
Kristine Wilkinson	Dillon Consulting
Sam Paglia	Town of Tecumseh
Troy Meloche	Landowner (1800 Corbi)
John Crispial	Landowner (1806 Corbi)
Brian Houston	Landowner (1812 Corbi)
David	Landowner (1818 Corbi)
--	Landowner (1824 Corbi)
Milica Spojadinovic	Landowner (1830 Corbi)
Ace	Landowner (1836 Corbi)
Massimo	Landowner (1840 Corbi)
Verica Cheward	Landowner (1852 Corbi)
Angelo Veselli	Landowner (11961 Shawnee)
--	Landowner (1803 Shawnee)
Guiseppe Lunghi	Landowner (1809 Shawnee)
--	Landowner (1815 Shawnee)
Andre Viselli	Landowner (1827 Shawnee)
--	Landowner (1829 Shawnee)
Kevin Cheng	Landowner (1833 Shawnee)
--	Landowner (1835 Shawnee)

Notes

Item	Discussion	Action By
1.	**Special meeting of landowners was held to gather additional information of the existing drainage of lands between Corbi Lane and Shawnee Road. Table 1 below provides a summary of the existing drainage conditions as described by the landowners.**	**N/A**

Table 1: Desciption of Drainage of Gouin Drain Branch North & South

Address	Description of Drainage
1800 Corbi	• 1 Rear Yard catch basin (may have second drain hidden under the large deck). • Flows very slow during large rain events (yard becomes very saturated) • Basement has a sump pump that goes to the front of the house
1806 Corbi	• Rear yard catch basin flows to the front of the street • No flooding issue
1812 Corbi	• 2 Rear yard catch basins (the smaller diameter CB flows to the front of the house with the sump pump flows, and the other discharges to the Gouin Drain • 2 downspouts are tied in to both the front drainage and the back
1818 Corbi	• 1 Rear Yard Catch basin. • Basement has a sump pump that goes to the front of the house
1824 Corbi	• 2 Rear Yard catch basins (one goes to the front of the house the other flows to the rear yard) • Downspouts are disconnected
1830 Corbi	• 1 Rear yard catch basin (flows to the Gouin Drains) • No issues while raining • Basement sump pump
1836 Corbi	• 2 Rear yard catch basins about 15 feet apart. Large CB is the municipal drain & the small CB goes to the front of the house • No flooding issues • Basement has a sump pump that goes to the front of the house
1840 Corbi	• 1 Rear yard catch basin, goes to municipal drain. • No issues during rain events
1852 Corbi	• Rear yard catch basin allows for good flow
11961 Gouin	• Spoke with son Tony 519-566-4955- sump pump drians into the
1803 Shawnee	• Sump pump from the house goes to the back of the house then through the neighbours yard and into the Gouin (5inch pipe) • No issues when it rains
1809 Shawnee	• No rear yard catch basin • No drainage problems, his lot is elevated compared to neighbours
1815 Shawnee	• Bad Flooding in rear yard (no where for water to go)
1827 Shawnee	• No rear yard catch basin • Rear yard surface waters flow into low lying lands of 11961 Gouin and then into the drain

1829 Shawnee	• Water flows west in the backyard towards the municipal drain
1833 Shawnee	• 6 inch from evesthrough to rear to the drain. Rear yard is lower than front (no flooding in normal rain events)
1835 Shawnee	• No issues, water in open drain is typically not very full

Errors and/or Omissions

These minutes were prepared by Kristine Wilkinson E.I.T., who should be notified of any errors and/or omissions.

SCHEDULE "A-4"

MEETING MINUTES

DILLON CONSULTING

Subject:	Gouin Drain Public Information Centre Meeting
Date and Time:	1:30 pm, April 28, 2022
Location:	Virtual Zoom Call hosted by the Town of Tecumseh
Our File:	17-6773

Attendees

Sam Paglia	Town of Tecumseh
John Henderson	Town of Tecumseh
Alessia Mussio	Town of Tecumseh
Andrew Dowie	City of Windsor
Garry Rossi	Windsor Utilities Commission/Enwin
Oliver Moir	Dillon Consulting Limited
Mark Hernandez	Dillon Consulting Limited
Wendy Belisle	Dillon Consulting Limited
Domenic Viselli	Landowner
Gary Coles	Landowner
Brian Houston	Landowner
Dan Omahen	Landowner
Joe Bachetti	Landowner
J. Andkilde	Landowner
R. Danby	Landowner
John	Landowner
Kevin	Landowner
Cathy	Landowner

Notes

Item	Discussion	Action By
Meeting Introduction:		
1.	Sam Paglia introduced Town staff and Engineers and provided an explanation of the Drainage Act process. Sam stated that everyone in the watershed will receive a copy of the Final report and a date for the Meeting to Consider.	**INFO.**
2.	Oliver Moir presented the report and explained the current state of the drain and the proposed work to be completed as well as an overview of the assessment schedules, block assessments, working corridors. Oliver noted that an additional secondary	**INFO.**

working corridor is required for a section of drain and that it would be included in the finalized report.

- Sam clarified block assessments and fairness and also to provide any additional questions once they receive final report so they can be resolved before adoption of the report. The average range of assessments is $107-400. **INFO.**

3. Through landowner questions of the assessments, it was realized that assessment of cost through the use of block assessments resulted in an unfair distribution of costs among the landowners of Block C for the Gouin Drain Branch North. Mark Hernandez recognized that a regular assessment would be more appropriate. The finalized report will reflect this change. **INFO.**

Questions & Answer Period:

4. Domenic Viselli asked for an explanation of his assessment. He also inquired about his son's property. **INFO.**

- Sam Paglia explained his assessment and told the audience that the assessments are based on the cost estimate, and the final assessments will be based on the tendered prices. **INFO.**
- Sam Paglia stated that typically the watershed boundary is established by historical reports and rarely do they change. **INFO.**

5. Gary Coles spoke to the function of the drain and bridge and culverts blocked and he built a clay berm to stop neighbours flow. Will maintenance relieve these issues? Is the east side of Shawnee Road in the watershed? **INFO.**

- Sam Paglia spoke to the difference between a road side drain, private ditches and municipal drains. He also explained common law. **INFO.**

6. Gary Coles stated maintenance is needed and culverts need to be flushed. **INFO.**

- Sam Paglia stated the drain will be put on a regular/annual brushing and/or cleaning and landowners will find the costs on their taxes. Assessments typically are under $50. **INFO.**
- Oliver Moir replied that the culverts are proposed to be flushed. **INFO.**

7. Gary Coles asked if lands being developed for the proposed battery plant will affect the drainage in the area. **INFO.**

- Andrew Dowie stated there are no firm plans to change drainage but it would be undertaken under the Drainage Act if required under a separate report. **INFO.**

8. Garry Rossi asked if the utility is not a landowner how are they assessed. **INFO.**

- Oliver Moir responded with an explanation of Section 26 increased costs due to the presence of the utility. **INFO.**

9. Garry Rossi asked how a utility can protect their infrastructure from these assessments in the future. He asked about coordination and interaction during construction. **INFO.**

- Mark Hernandez suggested to put utilities under the drains to protect utilities. He answered yes, there would be coordination with utilities for construction. Additional, new infrastructure and utility work presently happening at Banwell that affect drainage will be captured in future reports. **INFO.**

10. Landowner John asked about the drain on the west side of properties on Corbi. Is it part of this project? **INFO.**

- Mark Hernandez answered that it is a private drain and not maintained under a report. **INFO.**

11. Domenic Viselli asked about the history of the existing tile (Branch North). **INFO.**

- Sam Paglia explained it was the developer's responsibility and it can't be removed or abandoned. It must be maintained. **INFO.**
- Mark Hernandez added he was trying to be fair and equitable with special benefit costs to fix Branch North. **INFO.**

Errors and/or Omissions

These minutes were prepared by Wendy Belisle, who should be notified of any errors and/or omissions.

"SCHEDULE B"
SCHEDULE OF ALLOWANCES
GOUIN DRAIN

TOWN OF TECUMSEH & CITY OF WINDSOR

TOWN OF TECUMSEH

Roll No.	Con.	Description	Owner	Section 30 Damages	Section 29 Land	Total Allowances
570-42920		Block 'A'	Daniel J. & Karen L. Omahen	$0.00	$70.00	$70.00
570-43000		Block 'A'	Mirko & Radinka Vranesevic	$0.00	$115.00	$115.00
570-43005		Block 'A'	Scott R. Babister	$0.00	$60.00	$60.00
570-45902	2	Pt. Lots 147&148 RP12R1064 Pt. 2	2034053 Ontario Limited	$700.00	$1,403.00	$2,103.00
570-45930	2 & 3	W. Pt. Lot 147 12R6571 Pt. 1	1486044 Ontario Ltd	$530.00	$1,176.00	$1,706.00
570-45950	2	Pt. Lot 146 RP12R4263 Pt. 2 RP12R5826 Pts. 1&2	1486044 Ontario Ltd	$785.00	$1,749.00	$2,534.00
570-46201	2	Pt. Lot 144&145 RP12R18339 Pt. 1	507822 Ontario Inc. First Mirage Management	$485.00	$1,077.00	$1,562.00
TOTAL ALLOWANCES (Town of Tecumseh)				**$2,500 00**	**$5,650.00**	**$8,150.00**
OVERALL TOTAL ALLOWANCES (Town of Tecumseh & City of Windsor)				**$2,500 00**	**$5,650 00**	**$8,150.00**

"SCHEDULE C-1"
SCHEDULE OF ASSESSMENT
GOUIN DRAIN
TOWN OF TECUMSEH & CITY OF WINDSOR

TOWN OF TECUMSEH

ONTARIO LANDS:

Description	Area Affected (Acres)	(Ha.)	Owner	Special Benefit	Benefit	Outlet	Total Assessment
570-46900	7.06	2.86 *	Ministry of Transportation Ontario	$0.00	$46.00	$425.00	$471.00
Total on Ontario Lands				$0.00	$46.00	$425.00	$471.00

MUNICIPAL LANDS:

Description		Area Affected (Acres)	(Ha.)	Owner	Special Benefit	Benefit	Outlet	Total Assessment
County Road No. 22		8.86	3.59	County of Essex	$0.00	$486.00	$2,293.00	$2,779.00
Block 'A'	Lands	112.38	45.48	Town of Tecumseh	$0.00	$5,530.0	$30,388.00	$35,918.00
Block 'A'	Roads	27.13	10.98	Town of Tecumseh	$0.00	$1,929.00	$12,373.00	$14,302.00
Total on Municipal Lands					$0.00	$7,945.00	$45,054.00	$52,999.00

PRIVATELY-OWNED - NON-AGRICULTURAL LANDS:

Roll No.	Con.	Description			Owner	Special Benefit	Benefit	Outlet	Total Assessment
570-44000	2	Plan 1222 E Pt. LOT 14 RP 12R12697 Pt. 1	0.00	0.00	Ryan A. Labute	$3,898.00	$0.00	$0.00	$3,898.00
570-46700	2	Pt. Lot 147 RP 12R5669 Pt. 1 & 2	0.77	0.31	Steve Babic Enterprises Ltd.	$0.00	$8.00	$40.00	$48.00
Total on Privately-Owned - Non-Agricultural Lands						$3,898.00	$8.00	$40.00	$3,946.00

PRIVATELY-OWNED - AGRICULTURAL LANDS (GRANTABLE)

Roll No.	Con.	Description	Area Affected (Acres)	(Ha.)	Owner	Special Benefit	Benefit	Outlet	Total Assessment
570-45902	2	Pt. Lots 147&148 RP12R1064 Pt. 2	32.79	13.27	2034053 Ontario Ltd.	$3,121.00	$994.00	$2,814.00	$6,929.00
570-45930	2 & 3	W. Pt. Lot 147 12R6571 Pt. 1	30.76	12.45	1486044 Ontario Ltd.	$4,992.00	$867.00	$2,527.00	$8,386.00
570-45950	2	Pt. Lot 146 RP12R4263 Pt. 2 RP12R5826 Pts. 1&2	40.53	16.40	1486044 Ontario Ltd.	$6,863.00	$1,224.00	$3,043.00	$11,130.00
570-46201	2	Pt. Lot 144&145 RP12R18339 Pt. 1	22.19	8.98	507822 Ontario Inc. First Mirage Management Inc.	$2,848.00	$622.00	$1,607.00	$5,077.00
Total on Privately-Owned - Agricultural Lands (Grantable)						$17,824.00	$3,707.00	$9,991.00	$31,522.00

SECTION 26 & NON-AGRICULTURAL LANDS (NON-PRORATABLE)

Roll No.	Con.	Description	Owner	Special Benefit	Benefit	Outlet	Total Assessment
Shawnee Road			Town of Tecumseh	$4,131.00	$0.00	$0.00	$4,131.00
Total Section 26 & Non-Agricultural Lands (Non Pro-ratable).....				$4,131.00	$0.00	$0.00	$4,131.00
TOTAL ASSESSMENT (Town of Tecumseh)				**$25,853.00**	**$11,706.00**	**$55,510.00**	**$93,069.00**

	(Acres)	(Ha.)
Total Area		
Town of Tecumseh:	**282.47**	**114.32**

CITY OF WINDSOR

MUNICIPAL LANDS:

Description		Area Affected (Acres)	(Ha.)	Owner	Special Benefit	Benefit	Outlet	Total Assessment
Anchor Drive		2.68	1.08	City of Windsor	$0.00	$599.00	$705.00	$1,304.00
Banwell Road		19.91	8.06	City of Windsor	$351.00	$1,331.00	$6,628.00	$8,310.00
E.C. Row Expressway		58.90	23.84	City of Windsor	$0.00	$7,705.00	$15,354.00	$23,059.00
E.C. Row Avenue East		6.00	2.43	City of Windsor	$0.00	$2,368.00	$1,682.00	$4,050.00
070-890-00600		1.82	0.74	City of Windsor	$0.00	$27.00	$129.00	$156.00
070-890-05500		7.65	3.10	Windsor Utilities Commission	$0.00	$84.00	$405.00	$489.00
070-950-20401		0.23	0.09	City of Windsor	$0.00	$4.00	$15.00	$19.00
090-040-00103		105.74	42.80	City of Windsor	$75,453.00	$3,471.00	$9,117.00	$88,041.00
090-040-03402		5.14	2.08	City of Windsor	$0.00	$113.00	$606.00	$719.00
090-040-03403		7.55	3.06	City of Windsor	$8,416.00	$423.00	$652.00	$9,491.00
090-040-03502		1.80	0.73	City of Windsor	$0.00	$79.00	$425.00	$504.00
090-040-04000		1.57	0.64	City of Windsor	$0.00	$26.00	$136.00	$162.00
090-040-05000		11.06	4.48	City of Windsor	$0.00	$121.00	$572.00	$693.00
Block 'E'	Lands	4.60	1.86	City of Windsor	$0.00	$635.00	$614.00	$1,249.00
Block 'E'	Roads	1.28	0.52	City of Windsor	$0.00	$135.00	$286.00	$421.00
Total on Municipal Lands.....					$84,220.00	$17,121.00	$37,326.00	$138,667.00

PRIVATELY-OWNED - NON-AGRICULTURAL LANDS:

Roll No.	Con.	Description	Area Affected (Acres)	(Ha.)	Owner	Special Benefit	Benefit	Outlet	Total Assessment
070-650-01303	3	Pt. Lot 138&139 RP12R25708 Pts. 1-3, 6&12	2.90	1.17	Gary Barbesin	$2,497.00	$88.00	$160.00	$2,745.00
070-650-01351	3	Pt. Lot 138 RP 12R25708 Pts. 4, 5, 7 to 11			Jamieson Laboratories Ltd	$2,500 00	$0.00	$0.00	$2,500.00
Total on Privately-Owned - Non-Agricultural Lands.....						$4,997.00	$88.00	$160.00	$5,245.00

SECTION 26 & NON-AGRICULTURAL LANDS (NON-PRORATABLE)

Roll No.	Con.	Description	Owner	Special Benefit	Benefit	Outlet	Total Assessment
Public Utility			City of Windsor	$255,279.00	$0.00	$0.00	$255,279.00
Public Utility			Enbridge Gas Inc.	$27,605.00	$0.00	$0.00	$27,605.00
Public Utility			Bell Canada Inc.	$27,605.00	$0.00	$0.00	$27,605.00
Public Utility			Enwin Water	$27,055.00	$0.00	$0.00	$27,055.00
Public Utility			Enwin Powerlines	$86,325.00	$0.00	$0.00	$86,325.00
Total Section 26 & Non-Agricultural Lands (Non Pro-ratable)……				$423,869.00	$0.00	$0.00	$423,869.00
TOTAL ASSESSMENT (City of Windsor)				**$513,086.00**	**$17,209.00**	**$37,486.00**	**$567,781.00**

	(Acres)	(Ha.)
Total Area City of Windsor:	**238.83**	**96.68**

	(Acres)	(Ha.)
Total Area Town of Tecumseh & City of Windsor	**521.30**	**211.00**

TOTAL OVERALL ASSESSMENT (Town of Tecumseh & City of Windsor)	**$538,939.00**	**$28,915.00**	**$92,996.00**	**$660,850.00**

*** DENOTES LANDS WITH REDUCED ASSESSEMENT FOR WOODLOT**

"SCHEDULE C-2"
SCHEDULE OF ASSESSMENT
GOUIN DRAIN BRANCH NORTH
TOWN OF TECUMSEH

MUNICIPAL LANDS:

Description	Area Affected (Acres)	(Ha.)	Owner	Special Benefit	Benefit	Outlet	Total Assessment
Gouin Street			Town of Tecumseh	$14,450.00	$0.00	$0.00	$14,450.00
Total on Municipal Lands				$14,450.00	$0.00	$0.00	$14,450.00

PRIVATELY-OWNED - NON-AGRICULTURAL LANDS:

Roll No.	Con.	Description			Owner	Special Benefit	Benefit	Outlet	Total Assessment
570-43250	2	Plan 1222 Pt. Lot 11 R1216082 Pts 6, 30 & 60	0.15	0.06	Zoran & Milica Stojadinovic	$0.00	$0.00	$888.00	$888.00
570-43260	2	Plan 1222 Pt. Lot 11 R1216082 Pts 5, 29 & 59	0.15	0.06	Catherine M. & Ross A. Danby	$0.00	$0.00	$826.00	$826.00
570-43270	2	Plan 1222 Pt. Lot 11 R1216082 Pts 4, 28 & 58	0.13	0.05	David T. Gallant	$0.00	$0.00	$596.00	$596.00
570-43280	2	Plan 1222 Pt. Lot 11 R1216082 Pts 3, 27 & 57	0.13	0.05	Brian & Elisa Houston	$0.00	$2,050.00	$529.00	$2,579.00
570-43290	2	Plan 1222 Pt. Lot 11 R1216082 Pts 2, 26 & 56	0.13	0.05	John & Silvana Crispo	$0.00	$2,050.00	$462.00	$2,512.00
570-43295	2	Plan 1222 Pt. Lot 11 12R16082 Pts 1, 25 & 53 to 55	0.13	0.05	Troy & Lisa-Marie Meloche	$0.00	$2,050.00	$400.00	$2,450.00
570-43300	2	Plan 1222 Pt. Lots 10 & 11 12R13869 Part 1	0.74	0.30	Giuseppe Viselli	$0.00	$3,025.00	$1,998.00	$5,023.00
570-43400	2	Plan 1222 N Pt. Lot 10	0.21	0.09	Gilles A. & Lynda M. Lacombe	$0.00	$0.00	$479.00	$479.00
570-43500	2	Plan 1222 Pt. Lot 10	0.21	0.09	Scott R. Liebrock & Alexis R. Sovie	$0.00	$0.00	$555.00	$555.00
570-43600	2	Plan 1222 Pt. Lot 10	0.22	0.09	Dwain & Nancy Lariviere	$0.00	$0.00	$635.00	$635.00
570-43700	2	Plan 1222 S Pt. Lot 10	0.07	0.03	Andre Viselli	$0.00	$0.00	$238.00	$238.00
570-43800	2	Plan 1222 N Pt. Lot 13	0.46	0.19	Joanne L. Pierre	$0.00	$0.00	$1,569.00	$1,569.00
Total on Privately-Owned - Non-Agricultural Lands						$0.00	$9,175.00	$9,175.00	$18,350.00

NON-AGRICULTURAL LANDS (NON-PRORATABLE)

Roll No.	Con.	Description			Owner	Special Benefit	Benefit	Outlet	Total Assessment
Gouin Street					Town of Tecumseh	$35,250.00	$0.00	$0.00	$35,250.00
Total Non-Agricultural Lands (Non Pro-ratable)						$35,250.00	$0.00	$0.00	$35,250.00
TOTAL ASSESSMENT						**$49,700.00**	**$9,175.00**	**$9,175.00**	**$68,050.00**

	(Acres)	(Ha.)
Total Area	**2.74**	**1.11**

"SCHEDULE C-3"
SCHEDULE OF ASSESSMENT
GOUIN DRAIN BRANCH SOUTH
TOWN OF TECUMSEH

MUNICIPAL LANDS

Description			Area Affected (Acres)	(Ha.)	Owner	Special Benefit	Benefit	Outlet	Total Assessment
Block 'D'	Lands		1.58	0.64	Town of Tecumseh	$0.00	$3,475.00	$3,475.00	$6,950.00
Municpal Lands						$0.00	$3,475.00	$3,475.00	$6,950.00
TOTAL ASSESSMENT						**$0.00**	**$3,475.00**	**$3,475.00**	**$6,950.00**
			(Acres)	(Ha.)					
		Total Area:	**1.58**	**0.64**					

"SCHEDULE D-1"
DETAILS OF SPECIAL BENEFIT
GOUIN DRAIN
TOWN OF TECUMSEH & THE CITY OF WINDSOR

SPECIAL BENEFIT ASSESSMENT
(NON - AGRICULTURAL LANDS)

Roll No.	Owner		Item Description	Estimated Cost	Cost of Report	Special Benefit
Banwell Road	City of Windsor		Station 2+162 - Supply and installation of stone erosion protection with filter fabric underlay (50%)	$225.00	$126.00	$351.00
070-650-01303	Gary Barbesin		Bridge No.6 - Station 1+109 (Future Replacement) (50%)	$0.00	$1,250.00	$1,250.00
			Station 1+104 - Supply and installation of stone erosion protection with filter fabric underlay (100%)	$800.00	$447.00	$1,247.00
			Total Special Benefit - Roll No. 070-650-01303	$800.00	$1,697.00	$2,497.00
070-650-01351	Jamieson Laboratories Ltd	*	Bridge No.7 - Station 1+191 Secondary Access (Future Replacement) (100%)	$0.00	$2,500.00	$2,500.00
090-040-00103	City of Windsor		Bridge No.9 - Station 1+442 Bridge Removal (100%)	$2,500.00	$5,565.00	$8,065.00
			Bridge No.10 - Station 1+646 Bridge Removal (100%)	$2,500.00	$5,565.00	$8,065.00
			Station 1+376 - Supply and installation of stone erosion protection with filter fabric underlay (100%)	$1,250.00	$699.00	$1,949.00
			Station 1+549 - Supply and installation of stone erosion protection with filter fabric underlay (100%)	$800.00	$447.00	$1,247.00
			Station 1+751 - Supply and installation of stone erosion protection with filter fabric underlay (100%)	$800.00	$447.00	$1,247.00
			Costs associated with trucking and disposal of drain spoils excavated from the drain between Station 1+191 and Station 2+116, including engineering cost portion of report modifications (100%)	$35,200.00	$19,680.00	$54,880.00
			Total Special Benefit - Roll No. 090-040-00103	$43,050.00	$32,403.00	$75,453.00
090-040-03403	City of Windsor		Bridge No.8 - Station 1+278 Bridge Removal (100%)	$2,500.00	$5,565.00	$8,065.00
			Station 2+162 - Supply and installation of stone erosion protection with filter fabric underlay (50%)	$225.00	$126.00	$351.00
			Total Special Benefit - Roll No. 090-040-03403	$2,725.00	$5,691.00	$8,416.00
570-44000	Ryan A. Labute	*	Bridge No.19 - Station 3+167 Removal of 600 mm CSP, 12m in length (100%)	$1,500.00	$839.00	$2,339.00
			Costs associated with trucking and disposal of contaminated material excavated from the drain (100%)	$1,000.00	$559.00	$1,559.00
			Total Special Benefit - Roll No. 570-44000	$2,500.00	$1,398.00	$3,898.00
Total Special Benefit Assessment (Non - Agricultural Lands)……				$49,300.00	$43,815.00	$93,115.00

SPECIAL BENEFIT ASSESSMENT

(AGRICULTURAL LANDS GRANTABLE)

Roll No.	Owner	Item Description	Estimated Cost	Cost of Report	Special Benefit
570-45902	2034053 Ontario Ltd.	Bridge No.18 - Station 2+675 (Future Replacement) (50%)	$0.00	$1,250.00	$1,250.00
		Station 2+572 - Supply and installation of stone erosion protection with filter fabric underlay (50%)	$1,200.00	$665.00	$1,865.00
		Total Special Benefit - Roll No. 570-45902	$1,200.00	$1,915.00	$3,115.00
570-45930	1486044 Ontario Ltd.	Station 2+452 - Supply and installation of stone erosion protection with filter fabric underlay (50%)	$1,200.00	$665.00	$1,865.00
		Station 2+572 - Supply and installation of stone erosion protection with filter fabric underlay (50%)	$1,200.00	$665.00	$1,865.00
		Bridge No. 17 - Station 2+567 (Future Replacement) (50%)	$0.00	$1,250.00	$1,250.00
		Total Special Benefit - Roll No. 570-45930	$2,400.00	$2,580.00	$4,980.00
570-45950	1486044 Ontario Ltd.	Station 2+275 - Supply and installation of stone erosion protection with filter fabric underlay (50%)	$800.00	$443.00	$1,243.00
		Station 2+363 - Supply and installation of stone erosion protection with filter fabric underlay (100%)	$1,600.00	$886.00	$2,486.00
		Station 2+452 - Supply and installation of stone erosion protection with filter fabric underlay (50%)	$1,200.00	$665.00	$1,865.00
		Bridge No. 15 - Station 2+359 (Future Replacement) (50%)	$0.00	$1,250.00	$1,250.00
		Total Special Benefit - Roll No. 570-45950	$3,600.00	$3,244.00	$6,844.00
570-46201	507822 Ontario Inc. First Mirage Management Inc.	Station 2+162 - Supply and installation of stone erosion protection with filter fabric underlay (50%)	$225.00	$125.00	$350.00
		Station 2+275 - Supply and installation of stone erosion protection with filter fabric underlay (50%)	$800.00	$443.00	$1,243.00
		Bridge No.14 - Station 2+208 (Future Replacement) (50%)	$0.00	$1,250.00	$1,250.00
		Total Special Benefit - Roll No. 570-46201	$1,025.00	$1,818.00	$2,843.00
Total Special Benefit Assessment (Agricultural Lands Grantable)……..			$8,225.00	$9,557.00	$17,782.00

(SECTION 26 & NON - AGRICULTURAL LANDS NON-PRORATABLE)

Roll No.	Owner	Item Description	Estimated Cost	Cost of Report	Special Benefit
Shawnee Road	Town of Tecumseh	Bridge No.20 - Station 2+201 (Future Replacement + Bridge Cleaning) (100%)	$500.00	$3,631.00	$4,131.00
E.C. Row Expressway	City of Windsor	Station 0+098 - Supply and installation of stone erosion protection with filter fabric underlay (100%)	$1,250.00	$323.00	$1,573.00
E.C. Row Expressway	City of Windsor	Costs associated with the trucking and disposal of contaminated material excavated from the drain (100%)	$171,450.00	$44,300.00	$215,750.00
E.C. Row Expressway	City of Windsor	Bridge No.2 - Removal (100%)	$2,500.00	$646.00	$3,146.00
E.C. Row Expressway	City of Windsor	Bridge No.4 - Repair of drain bottom on downstream and upstream ends of bridge using stone erosion protection (100%)	$20,600.00	$5,323.00	$25,923.00
Anchor Drive	City of Windsor	Bridge No.5 - Station 1+020 (Future Replacement + Bridge Cleaning) (100%)	$1,000.00	$3,758.00	$4,758.00
Banwell Road	City of Windsor	Bridge No.13 - Station 2+116 (Future Replacement + Bridge Cleaning) (100%)	$500.00	$3,629.00	$4,129.00
		Total Special Benefit - City of Windsor	$197,300.00	$57,979.00	$255,279.00
Public Utility	Enbridge Gas Inc.	Bridge No.1 - Replacement (25%)	$21,500.00	$5,555.00	$27,055.00
		Cost associated with daylighting gas distribution and transmission mains over Bridge No. 1 (50%)	$0.00	$550.00	$550.00
		Total Special Benefit - Enbridge Gas Inc.	$21,500.00	$6,105.00	$27,605.00
Public Utility	Bell Canada Inc.	Bridge No.1 - Replacement (25%)	$21,500.00	$5,555.00	$27,055.00
		Cost associated with daylighting gas distribution and transmission mains over Bridge No.1 (50%)	$0.00	$550.00	$550.00
		Total Special Benefit - Bell Canada Inc.	$21,500.00	$6,105.00	$27,605.00
Public Utility	Enwin Water	Bridge No.1 - Replacement (25%)	$21,500.00	$5,555.00	$27,055.00
Public Utility	Enwin Powerlines	Bridge No.1 - Replacement (25%)	$21,500.00	$5,555.00	$27,055.00
		Bridge No.3 - Replacement (100%)	$47,100.00	$12,170.00	$59,270.00
		Total Special Benefit - Enwin Powerlines	$68,600.00	$17,725.00	$86,325.00
Total Special Benefit Assessment (Section 26 & Non-Agricultural Lands Non Pro-Ratable)			$330,900.00	$97,100.00	$428,000.00

OVERALL TOTAL SPECIAL BENEFIT ASSESSMENT $538,641.00

*** DENOTES SECONDARY ACCESS CULVERT**

"SCHEDULE D-2"
DETAILS OF SPECIAL BENEFIT
GOUIN DRAIN BRANCH NORTH
TOWN OF TECUMSEH

SPECIAL BENEFIT ASSESSMENT
(NON - AGRICULTURAL LANDS)

Roll No.	Owner	Item Description	Estimated Cost	Cost of Report	Special Benefit
Gouin Street	Town of Tecumseh	Increased cost of work completed within residential lands, including pipe installation, temporary construction fencing, and property restoration (100%)	$12,150.00	$2,300.00	$14,450.00
Total Special Benefit Assessment (Non - Agricultural Lands)……			$12,150.00	$2,300.00	$14,450.00

SPECIAL BENEFIT ASSESSMENT
(NON - AGRICULTURAL LANDS NON-PRORATABLE)

Roll No.	Owner	Item Description	Estimated Cost	Cost of Report	Special Benefit
Gouin Street	Town of Tecumseh	Non-proratable assessments include the cost of enclosed drain repair with non-shrink concrete grout, and the cost of the CCTV inspection (less flushing costs) (100%)	$29,700.00	$5,550.00	$35,250.00
Total Special Benefit Assessment (Non - Agricultural Lands Non Pro-Rateable)			$29,700.00	$5,550.00	$35,250.00

OVERALL TOTAL SPECIAL BENEFIT ASSESSMENT $49,700.00

"SCHEDULE E-1"
SCHEDULE OF ASSESSMENT FOR FUTURE MAINTENANCE
GOUIN DRAIN (STA 2+162 TO STA 3+286) WITHIN THE TOWN OF TECUMSEH

ONTARIO LANDS:

Description	Area Affected (Acres)	(Ha.)	Owner	Special Benefit	Benefit	Outlet	Total Assessment
570-46900	7.06	2.86 *	Ministry of Transportation Ontario	$0.00	$9.00	$37.00	$46.00
Total on Ontario Lands				$0.00	$9.00	$37.00	$46.00

MUNICIPAL LANDS:

Description		Area Affected (Acres)	(Ha.)	Owner	Special Benefit	Benefit	Outlet	Total Assessment
Block 'A'	Lands	112.38	45.48	Town of Tecumseh	$0.00	$1,208.0	$4,570.00	$5,778.00
Block 'A'	Roads	27.13	10.98	Town of Tecumseh	$0.00	$406.00	$1,839.00	$2,245.00
Total on Municipal Lands					$0.00	$1,614.00	$6,409.00	$8,023.00

PRIVATELY-OWNED - AGRICULTURAL LANDS (GRANTABLE)

Roll No.	Con.	Description	Area Affected (Acres)	(Ha.)	Owner	Special Benefit	Benefit	Outlet	Total Assessment
570-45902	2	Pt. Lots 147&148 RP12R1064 Pt. 2	32.79	13.27	2034053 Ontario Ltd.	$0.00	$241.00	$340.00	$581.00
570-45930	2 & 3	W. Pt. Lot 147 12R6571 Pt. 1	24.76	10.02	1486044 Ontario Ltd.	$0.00	$196.00	$228.00	$424.00
570-45950	2	Pt. Lot 146 RP12R4263 Pt. 2 RP12R5826 Pts. 1&2	37.53	15.19	1486044 Ontario Ltd.	$0.00	$291.00	$321.00	$612.00
570-46201	2	Pt. Lot 144&145 RP12R18339 Pt. 1	22.19	8.98	507822 Ontario Inc. First Mirage Management Inc.	$0.00	$149.00	$165.00	$314.00
Total on Privately-Owned - Agricultural Lands (Grantable)						$0.00	$877.00	$1,054.00	$1,931.00
TOTAL ASSESSMENT (Town of Tecumseh)						**$0.00**	**$2,500.00**	**$7,500.00**	**$10,000.00**

	(Acres)	(Ha.)
Total Area Town of Tecumseh:	**263.84**	**106.78**

*** DENOTES LANDS WITH REDUCED ASSESSEMENT FOR WOODLOT**

"SCHEDULE E-2"
SCHEDULE OF ASSESSMENT FOR FUTURE MAINTENANCE
GOUIN DRAIN (STA 0+000 TO STA 2+162) WITHIN CITY OF WINDSOR

TOWN OF TECUMSEH

ONTARIO LANDS:

Description	Area Affected (Acres)	(Ha.)	Owner	Special Benefit	Benefit	Outlet	Total Assessment
570-46900	7.06	2.86 *	Ministry of Transportation Ontario	$0.00	$4.00	$29.00	$33.00
Total on Ontario Lands				$0.00	$4.00	$29.00	$33.00

MUNICIPAL LANDS:

Description		Area Affected (Acres)	(Ha.)	Owner	Special Benefit	Benefit	Outlet	Total Assessment
County Road No. 22		8.86	3.59	County of Essex	$0.00	$37.00	$206.00	$243.00
Block 'A'	Lands	112.38	45.48	Town of Tecumseh	$0.00	$478.0	$2,205.00	$2,683.00
Block 'A'	Roads	27.13	10.98	Town of Tecumseh	$0.00	$167.00	$887.00	$1,054.00
Total on Municipal Lands					$0.00	$682.00	$3,298.00	$3,980.00

PRIVATELY-OWNED - NON-AGRICULTURAL LANDS:

Roll No.	Con.	Description			Owner	Special Benefit	Benefit	Outlet	Total Assessment
570-46700	2	Pt. Lot 147 RP 12R5669 Pt. 1 & 2	0.77	0.31	Steve Babic Enterprises Ltd.	$0.00	$1.00	$4.00	$5.00
Total on Privately-Owned - Non-Agricultural Lands						$0.00	$1.00	$4.00	$5.00

PRIVATELY-OWNED - AGRICULTURAL LANDS (GRANTABLE)

Roll No.	Con.	Description	Area Affected (Acres)	(Ha.)	Owner	Special Benefit	Benefit	Outlet	Total Assessment
570-45902	2	Pt. Lots 147&148 RP12R1064 Pt. 2	32.79	13.27	2034053 Ontario Ltd.	$0.00	$86.00	$214.00	$300.00
570-45930	2 & 3	W. Pt. Lot 147 12R6571 Pt. 1	30.76	12.45	1486044 Ontario Ltd.	$0.00	$75.00	$201.00	$276.00
570-45950	2	Pt. Lot 146 RP12R4263 Pt. 2 RP12R5826 Pts. 1&2	40.53	16.40	1486044 Ontario Ltd.	$0.00	$106.00	$265.00	$371.00
570-46201	2	Pt. Lot 144&145 RP12R18339 Pt. 1	22.19	8.98	507822 Ontario Inc. First Mirage Management Inc.	$0.00	$54.00	$145.00	$199.00
Total on Privately-Owned - Agricultural Lands (Grantable)						$0.00	$321.00	$825.00	$1,146.00
TOTAL ASSESSMENT (Town of Tecumseh)						**$0.00**	**$1,008.00**	**$4,156.00**	**$5,164.00**

	(Acres)	(Ha.)
Total Area Town of Tecumseh:	**282.47**	**114.32**

CITY OF WINDSOR

MUNICIPAL LANDS:

Description		Area Affected (Acres)	(Ha.)	Owner	Special Benefit	Benefit	Outlet	Total Assessment
Anchor Drive		2.68	1.08	City of Windsor	$0.00	$56.00	$65.00	$121.00
Banwell Road		19.91	8.06	City of Windsor	$0.00	$115.00	$651.00	$766.00
E.C. Row Expressway		58.90	23.84	City of Windsor	$0.00	$666.00	$1,377.00	$2,043.00
E.C. Row Avenue East		6.00	2.43	City of Windsor	$0.00	$205.00	$196.00	$401.00
070-890-00600		1.82	0.74	City of Windsor	$0.00	$2.00	$16.00	$18.00
070-890-05500		7.65	3.10	Windsor Utilities Commission	$0.00	$7.00	$38.00	$45.00
070-950-20401		0.23	0.09	City of Windsor	$0.00	$0.00	$1.00	$1.00
090-040-00103		105.74	42.80	City of Windsor	$0.00	$300.00	$721.00	$1,021.00
090-040-03402		5.14	2.08	City of Windsor	$0.00	$10.00	$48.00	$58.00
090-040-03403		7.55	3.06	City of Windsor	$0.00	$37.00	$52.00	$89.00
090-040-03502		1.80	0.73	City of Windsor	$0.00	$7.00	$34.00	$41.00
090-040-04000		1.57	0.64	City of Windsor	$0.00	$2.00	$11.00	$13.00
090-040-05000		11.06	4.48	City of Windsor	$0.00	$10.00	$46.00	$56.00
Block 'E'	Lands	4.60	1.86	City of Windsor	$0.00	$55.00	$50.00	$105.00
Block 'E'	Roads	1.28	0.52	City of Windsor	$0.00	$12.00	$23.00	$35.00
Total on Municipal Lands					$0.00	$1,484.00	$3,329.00	$4,813.00

PRIVATELY-OWNED - NON-AGRICULTURAL LANDS:

Roll No.	Con.	Description	Area Affected (Acres)	(Ha.)	Owner	Special Benefit	Benefit	Outlet	Total Assessment
070-650-01303	3	Pt. Lot 138&139 RP12R25708 Pts. 1-3, 6&12	2.90	1.17	Gary Barbesin	$0.00	$8.00	$15.00	$23.00
Total on Privately-Owned - Non-Agricultural Lands						$0.00	$8.00	$15.00	$23.00
TOTAL ASSESSMENT (City of Windsor)						**$0.00**	**$1,492.00**	**$3,344.00**	**$4,836.00**

	(Acres)	(Ha.)
Total Area City of Windsor:	**238.83**	**96.68**

	(Acres)	(Ha.)
Total Area Town of Tecumseh & City of Windsor	**521.30**	**211.00**

TOTAL OVERALL ASSESSMENT (Town of Tecumseh & City of Windsor)	**$0.00**	**$2,500.00**	**$7,500.00**	**$10,000.00**

*** DENOTES LANDS WITH REDUCED ASSESSEMENT FOR WOODLOT**

"SCHEDULE E-3"
SCHEDULE OF ASSESSMENT FOR FUTURE MAINTENANCE
GOUIN DRAIN (BRIDGES 14, 15, 16, 17 & 18) WITHIN TOWN OF TECUMSEH

ONTARIO LANDS:

Description	Area Affected (Acres)	(Ha.)	Owner	Special Benefit	Benefit	Outlet	Total Assessment
570-46900	7.06	2.86 *	Ministry of Transportation Ontario	$0.00	$0.00	$74.00	$74.00
Total on Ontario Lands				$0.00	$0.00	$74.00	$74.00

MUNICIPAL LANDS:

Description		Area Affected (Acres)	(Ha.)	Owner	Special Benefit	Benefit	Outlet	Total Assessment
Block 'A'	Lands	112.38	45.48	Town of Tecumseh	$0.00	$0.00	$5,672.00	$5,672.00
Block 'A'	Roads	27.13	10.98	Town of Tecumseh	$0.00	$0.00	$2,282.00	$2,282.00
Total on Municipal Lands					$0.00	$0.00	$7,954.00	$7,954.00

PRIVATELY-OWNED - AGRICULTURAL LANDS (GRANTABLE)

Roll No.	Con.	Description	Area Affected (Acres)	(Ha.)	Owner	Special Benefit	Benefit	Outlet	Total Assessment
570-45902	2	Pt. Lots 147&148 RP12R1064 Pt. 2	32.79	13.27	2034053 Ontario Ltd.	$0.00	$0.00	$552.00	$552.00
570-45930	2 & 3	W. Pt. Lot 147 12R6571 Pt. 1	24.76	10.02	1486044 Ontario Ltd.	$0.00	$0.00	$416.00	$416.00
570-45950	2	Pt. Lot 146 RP12R4263 Pt. 2 RP12R5826 Pts. 1&2	37.53	15.19	1486044 Ontario Ltd.	$0.00	$0.00	$631.00	$631.00
570-46201	2	Pt. Lot 144&145 RP12R18339 Pt. 1	22.19	8.98	507822 Ontario Inc. First Mirage Management Inc.	$0.00	$0.00	$373.00	$373.00
Total on Privately-Owned - Agricultural Lands (Grantable)						$0.00	$0.00	$1,972.00	$1,972.00
TOTAL ASSESSMENT (Town of Tecumseh)						**$0.00**	**$0.00**	**$10,000.00**	**$10,000.00**

	(Acres)	(Ha.)
Total Area Town of Tecumseh:	**263.84**	**106.78**

*** DENOTES LANDS WITH REDUCED ASSESSEMENT FOR WOODLOT**

"SCHEDULE E-4"
SCHEDULE OF ASSESSMENT FOR FUTURE MAINTENANCE
GOUIN DRAIN (BRIDGE 6) WITHIN CITY OF WINDSOR

TOWN OF TECUMSEH

ONTARIO LANDS:

Description	Area Affected (Acres)	(Ha.)	Owner	Special Benefit	Benefit	Outlet	Total Assessment
570-46900	7.06	2.86 *	Ministry of Transportation Ontario	$0.00	$0.00	$46.00	$46.00
Total on Ontario Lands				$0.00	$0.00	$46.00	$46.00

MUNICIPAL LANDS:

Description		Area Affected (Acres)	(Ha.)	Owner	Special Benefit	Benefit	Outlet	Total Assessment
Block 'A'	Lands	112.38	45.48	Town of Tecumseh	$0.00	$0.00	$3,546.00	$3,546.00
Block 'A'	Roads	27.13	10.98	Town of Tecumseh	$0.00	$0.00	$1,427.00	$1,427.00
Total on Municipal Lands					$0.00	$0.00	$4,973.00	$4,973.00

PRIVATELY-OWNED - AGRICULTURAL LANDS (GRANTABLE)

Roll No.	Con.	Description	Area Affected (Acres)	(Ha.)	Owner	Special Benefit	Benefit	Outlet	Total Assessment
570-45902	2	Pt. Lots 147&148 RP12R1064 Pt. 2	32.79	13.27	2034053 Ontario Ltd.	$0.00	$0.00	$345.00	$345.00
570-45930	2 & 3	W. Pt. Lot 147 12R6571 Pt. 1	24.76	10.02	1486044 Ontario Ltd.	$0.00	$0.00	$260.00	$260.00
570-45950	2	Pt. Lot 146 RP12R4263 Pt. 2 RP12R5826 Pts. 1&2	37.53	15.19	1486044 Ontario Ltd.	$0.00	$0.00	$395.00	$395.00
570-46201	2	Pt. Lot 144&145 RP12R18339 Pt. 1	22.19	8.98	507822 Ontario Inc. First Mirage Management Inc.	$0.00	$0.00	$233.00	$233.00
Total on Privately-Owned - Agricultural Lands (Grantable)						$0.00	$0.00	$1,233.00	$1,233.00
TOTAL ASSESSMENT (Town of Tecumseh)						**$0.00**	**$0.00**	**$6,252.00**	**$6,252.00**

	(Acres)	(Ha.)
Total Area Town of Tecumseh:	**263.84**	**106.78**

CITY OF WINDSOR

MUNICIPAL LANDS:

Description	Area Affected (Acres)	(Ha.)	Owner	Special Benefit	Benefit	Outlet	Total Assessment
Anchor Drive	2.68	1.08	City of Windsor	$0.00	$0.00	$140.00	$140.00
Banwell Road	19.91	8.06	City of Windsor	$0.00	$0.00	$1,047.00	$1,047.00
E.C. Row Avenue East	6.00	2.43	City of Windsor	$0.00	$0.00	$316.00	$316.00
070-890-00600	1.82	0.74	City of Windsor	$0.00	$0.00	$26.00	$26.00
070-890-05500	7.65	3.10	Windsor Utilities Commission	$0.00	$0.00	$81.00	$81.00
090-040-00103	105.74	42.80	City of Windsor	$0.00	$0.00	$1,668.00	$1,668.00
090-040-03402	5.14	2.08	City of Windsor	$0.00	$0.00	$108.00	$108.00
090-040-03403	7.55	3.06	City of Windsor		$0.00	$119.00	$119.00
090-040-03502	1.80	0.73	City of Windsor	$0.00	$0.00	$76.00	$76.00
090-040-04000	1.57	0.64	City of Windsor	$0.00	$0.00	$25.00	$25.00
090-040-05000	11.06	4.48	City of Windsor	$0.00	$0.00	$116.00	$116.00
Total on Municipal Lands				$0.00	$0.00	$3,722.00	$3,722.00

PRIVATELY-OWNED - NON-AGRICULTURAL LANDS:

Roll No.	Con.	Description	Area Affected (Acres)	(Ha.)	Owner	Special Benefit	Benefit	Outlet	Total Assessment
070-650-01303	3	Pt. Lot 138&139 RP12R25708 Pts. 1-3, 6&12	2.00	0.81	Gary Barbesin	$0.00	$0.00	$26.00	$26.00
Total on Privately-Owned - Non-Agricultural Lands						$0.00	$0.00	$26.00	$26.00

TOTAL ASSESSMENT (City of Windsor)	**$0.00**	**$0.00**	**$3,748.00**	**$3,748.00**		

	(Acres)	(Ha.)
Total Area City of Windsor:	**172.92**	**70.01**

	(Acres)	(Ha.)
Total Area Town of Tecumseh & City of Windsor	**436.76**	**176.79**

TOTAL OVERALL ASSESSMENT (Town of Tecumseh & City of Windsor)	**$0.00**	**$0.00**	**$10,000.00**	**$10,000.00**

*** DENOTES LANDS WITH REDUCED ASSESSEMENT FOR WOODLOT**

"SCHEDULE E-5"
SCHEDULE OF ASSESSMENT FOR FUTURE MAINTENANCE
GOUIN DRAIN BRANCH NORTH (STA. 0+000A TO STA. 0+064A)
TOWN OF TECUMSEH

MUNICIPAL LANDS:

Description		Area Affected (Acres)	Area Affected (Ha.)	Owner	Special Benefit	Benefit	Outlet	Total Assessment
Block 'B'	Roads	12.75	5.16	Town of Tecumseh	$0.00	$0.00	$2,851.00	$2,851.00
Block 'B'	Lands	53.27	21.56	Town of Tecumseh	$0.00	$0.00	$7,149.00	$7,149.00
Total on Municipal Lands					$0.00	$0.00	$10,000.00	$10,000.00
TOTAL ASSESSMENT					**$0.00**	**$0.00**	**$10,000.00**	**$10,000.00**

	(Acres)	(Ha.)
Total Area:	**66.02**	**26.72**

"SCHEDULE E-6"
SCHEDULE OF ASSESSMENT FOR FUTURE MAINTENANCE
GOUIN DRAIN BRANCH NORTH (STA 0+064A TO STA 0+198A)
TOWN OF TECUMSEH

PRIVATELY-OWNED - NON-AGRICULTURAL LANDS:

Roll No.	Con.	Description			Owner	Special Benefit	Benefit	Outlet	Total Assessment
570-43250	2	Plan 1222 Pt. Lot 11 R1216082 Pts 6, 30 & 60	0.15	0.06	Zoran & Milica Stojadinovic	$0.00	$356.00	$242.00	$598.00
570-43260	2	Plan 1222 Pt. Lot 11 R1216082 Pts 5, 29 & 59	0.15	0.06	Catherine M. & Ross A. Danby	$0.00	$747.00	$225.00	$972.00
570-43270	2	Plan 1222 Pt. Lot 11 R1216082 Pts 4, 28 & 58	0.13	0.05	David T. Gallant	$0.00	$682.00	$162.00	$844.00
570-43280	2	Plan 1222 Pt. Lot 11 R1216082 Pts 3, 27 & 57	0.13	0.05	Brian & Elisa Houston	$0.00	$682.00	$144.00	$826.00
570-43290	2	Plan 1222 Pt. Lot 11 R1216082 Pts 2, 26 & 56	0.13	0.05	John & Silvana Crispo	$0.00	$682.00	$126.00	$808.00
570-43295	2	Plan 1222 Pt. Lot 11 12R16082 Pts 1, 25 & 53 to 55	0.13	0.05	Troy & Lisa-Marie Meloche	$0.00	$682.00	$109.00	$791.00
570-43300	2	Plan 1222 Pt. Lots 10 & 11 12R13869 Part 1	0.74	0.30	Giuseppe Viselli	$0.00	$2,955.00	$544.00	$3,499.00
570-43400	2	Plan 1222 N Pt. Lot 10	0.21	0.09	Gilles A. & Lynda M. Lacombe	$0.00	$0.00	$131.00	$131.00
570-43500	2	Plan 1222 Pt. Lot 10	0.21	0.09	Scott R. Liebrock & Alexis R. Sovie	$0.00	$0.00	$151.00	$151.00
570-43600	2	Plan 1222 Pt. Lot 10	0.22	0.09	Dwain & Nancy Lariviere	$0.00	$0.00	$173.00	$173.00
570-43700	2	Plan 1222 S Pt. Lot 10	0.07	0.03	Andre Viselli	$0.00	$0.00	$65.00	$65.00
570-43800	2	Plan 1222 N Pt. Lot 13	0.46	0.19	Joanne L. Pierre	$0.00	$714.00	$428.00	$1,142.00
Total on Privately-Owned - Non-Agricultural Lands						$0.00	$7,500.00	$2,500.00	$10,000.00
TOTAL ASSESSMENT						**$0.00**	**$7,500.00**	**$2,500.00**	**$10,000.00**

	(Acres)	(Ha.)
Total Area	**2.74**	**1.11**

"SCHEDULE E-7"
SCHEDULE OF ASSESSMENT FOR FUTURE MAINTENANCE
GOUIN DRAIN BRANCH SOUTH
TOWN OF TECUMSEH

MUNICIPAL LANDS:

Description		Area Affected (Acres)	(Ha.)	Owner	Special Benefit	Benefit	Outlet	Total Assessment
Block 'D'	Lands	1.58	0.64	Town of Tecumseh	$0.00	$0.00	$10,000.00	$10,000.00
Total on Municipal Lands					$0.00	$0.00	$10,000.00	$10,000.00
TOTAL ASSESSMENT					**$0.00**	**$0.00**	**$10,000.00**	**$10,000.00**
		(Acres)	(Ha.)					
	Total Area:	**1.58**	**0.64**					

"SCHEDULE F"
DRAINAGE REPORT FOR THE
GOUIN DRAIN & BRANCHES
TOWN OF TECUMSEH & CITY OF WINDSOR

SPECIAL PROVISIONS - GENERAL

1.0 GENERAL SPECIFICATIONS

The General Specifications attached hereto is part of "Schedule F." It also forms part of this specification and is to be read with it, but where there is a difference between the requirements of the General Specifications and those of the Special Provisions which follow, the Special Provisions will take precedence.

2.0 DESCRIPTION OF WORK

The work to be carried out under this Contract includes, but is not limited to, the supply of all **labour, equipment, and materials to complete** the following items:

Gouin Drain

Open Drain Work

- Brushing of the drain including the disposal by burning on-site or removal off-site with trimming and/or removal of existing trees as required to accommodate the drainage works, as follows:
  - Light brushing between Stations 0+000 and 0+400, Stations 0+520 and 0+670, and Stations 1+032 and 2+116. Work includes temporary removal of approximately 210 metres of chain-link fence to access the drain, and restoration to existing conditions.
  - Medium brushing between Stations 2+116 and 2+758 (completed August 2020).
    This item has been completed by the Town. It is not to be included when tendering the work for construction.
- Excavation, levelling, and trucking of excavated materials works, as follows:
  - Drain deepening, as follows:
    - Station 0+172 to Station 1+010, totalling approximately 838 lineal metres of drain and approximately 1,600 m^3 of material.
  - Excavation of drain bottom only, as follows:
    - Station 1+010 to Station 2+758, totalling approximately 1,748 lineal metres of drain and approximately 1,390 m^3 of material.
    - Station 3+128 to Station 3+208, totalling approximately 80 lineal metres of drain and approximately 25 m^3 of material.
  - Trucking and disposal of excavated materials off-site, as follows:

        - Stations 1+109 to Station 2+116, totalling approximately 880 m^3 of material.
        - Stations 3+128 to Station 3+208, totalling approximately 25 m^3 of material.
    - Levelling of excavated materials, as follows:
        - Station 1+010 to Station 1+109, totalling approximately 99 lineal metres of drain and approximately 10 m^3 of material.
        - Station 2+116 to Station 2+758, totalling approximately 642 lineal metres of drain and approximately 500 m^3 of material.
- Seeding of grass buffer strips, as follows:
    - Seeding of 1.0 m wide grass buffer strip beyond the top of bank on the south side of the drain from Station 1+032 to Station 2+107 (approximately 1,080 m^2).
    - Seeding of 1.0 m wide grass buffer strip beyond the top of bank on the north and south side of the drain from Station 2+122 to Station 2+680 (approximately 1,120 m^2).
    - Seeding of 1.0 m wide grass buffer strip beyond the top of bank on the west side of the drain from Station 2+680 to Station 2+758 (approximately 80 m^2).
    - Seeding of 1.0 m wide grass buffer strip beyond the top of bank on the north and south side of the drain from Station 3+128 to Station 3+208 (approximately 160 m2).
- Private access bridge cleaning works, as follows:
    - Bridges No. 6, 7, 14, 15,16, 17, 18
- Removal of access bridges, as follows:
    - <u>Bridge No. 8 – Station 1+278 – City of Windsor (Roll No. 090-040-00103)</u> – The work is to include removal and disposal of existing 9.7 m long, 2240 mm x 1630 mm corrugated steel pipe arch as well as the existing bagged concrete headwalls and gravel driveway. Complete with grading and seeding of the drain banks, site clean-up and restoration within the working area.
    - <u>Bridge No. 9 – Station 1+442 – City of Windsor (Roll No. 090-040-00103)</u> – The work is to include removal and disposal of existing 8.2 m long, 2240 mm x 1630 mm corrugated steel pipe arch as well as the bagged concrete headwalls and gravel driveway. Complete with grading and seeding of the drain banks, site clean-up and restoration within the working area.
    - <u>Bridge No. 10 – Station 1+646 – City of Windsor (Roll No. 090-040-00103)</u> – The work is to include removal and disposal of existing 7.8 m long, 2240 mm x 1630 mm corrugated steel pipe arch as well as the existing concrete headwalls and gravel driveway. Complete with grading and seeding of the drain banks, site clean-up and restoration within the working area.
    - <u>Bridge No. 19 – Station 3+167 – Ryan A. LaBute (Roll No. 570-44000)</u> – The work is to include removal and disposal of existing 12 m long, 600 mm diameter corrugated steel pipe as well as the existing with rip rap and gravel

driveway. Complete with grading and seeding of the drain banks, site clean-up and restoration within the working area.

- Stone erosion protection (SEP) works, as follows:
  - Station 1+104 – Supply and install 10 m^2 (300 mm thick) of stone erosion protection (SEP) including new filter fabric underlay at the location of surface inlet swale on south side.
  - Station 1+376 – Supply and install 15 m^2 (300 mm thick) of stone erosion protection (SEP) including new filter fabric underlay at the location of surface inlet swale on south side.
  - Station 1+549 – Supply and install 10 m^2 (300 mm thick) of stone erosion protection (SEP) including new filter fabric underlay at the location of surface inlet swale on south side.
  - Station 1+751 – Supply and install 10 m^2 (300 mm thick) of stone erosion protection (SEP) including new filter fabric underlay at the location of surface inlet swale on south side.
  - Station 2+162 – Supply and install 5 m^2 (300 mm thick) of stone erosion protection (SEP) including new filter fabric underlay at the location of surface inlet swale on south side.
  - Station 2+275 – Supply and install 20 m^2 (300 mm thick) of stone erosion protection (SEP) including new filter fabric underlay at the location of surface inlet swale on north and south side.
  - Station 2+363 – Supply and install 20 m^2 (300 mm thick) of stone erosion protection (SEP) including new filter fabric underlay at the location of surface inlet swale on north and south side.
  - Station 2+452 – Supply and install 30 m^2 (300 mm thick) of stone erosion protection (SEP) including new filter fabric underlay at the location of surface inlet swale on north and south side.
  - Station 2+572 – Supply and install 30 m^2 (300 mm thick) of stone erosion protection (SEP) including new filter fabric underlay at the location of surface inlet swale on north and south side.
- Temporary Silt Control Measures During Construction
- Trucking of excavated materials works, as follows:
  - Trucking and landfilling of contaminated excavated materials off-site, as follows:
    - Station 0+162 to Station 0+250, totalling approximately 45 m^3 of material.
    - Station 0+470 to Station 1+010, totalling approximately 1,005 m^3 of material.
  - Trucking of excavated materials off-site to a site capable of receiving soils meeting the Table 3.1 RPI and/or 3.1 ICC ESWS that has a salt-parameter exemption, as follows:

        - Station 0+250 to Station 0+470, totalling approximately 550 m^3 of material.
- Stone erosion protection (SEP) works, as follows:
    - Station 0+098 – Supply and install 15 m^2 (300 mm thick) of stone erosion protection (SEP) including new filter fabric underlay at the location of washout on south drain bank.
- Private access bridge cleaning works, as follows:
    - Cleaning of Bridge No. 5 – Station 1+020 19 m long, 1520 mm diameter corrugated steel pipe (CSP) road culvert.
    - Cleaning of Bridge No. 13 – Station 2+116 15.6 m long, 2230 mm x 1700 mm corrugated steel pipe arch (CSPA) road culvert.
    - Cleaning of Bridge No. 20 – Station 3+214 12 m long, 760 mm diameter corrugated steel pipe (CSP) road culvert.
- Bridge works, as follows:
    - <u>Bridge No. 1 – Station 0+200 (Enbridge Gas, Enwin Water & Bell Canada)</u> – Removal and disposal of existing 28 m long twin 1370 mm x 1000 mm CSPA, existing end walls and backfill off-site that are not suitable for native backfill. Installation of a new 32 m long, 2500 mm x 1830 mm corrugated steel pipe arch (CSPA). Clear stone bedding material beneath pipe minimum 150 mm thickness, up to pipe springline (approximately 110 tonnes). Clean native or imported clean native backfill material from springline of pipe culvert to the underside of grassed driveway (approximately 300 m^3). Topsoil (approximately 15 m^3), fine grading and seeding (approximately 230 m^2). Sloping stone end walls and lining of drain bottom with stone erosion protection to allow for excavation below proposed grade line at upstream and downstream ends of culvert (approximately 130 m^2). Removal and restoration of fence to existing conditions. Cost includes installation of all necessary supports for existing utilities necessary during construction and third party inspection.
    - <u>Bridge No. 3 – Station 0+825 (Enwin Powerlines)</u> – Removal and disposal of existing 7 m long, twin 1520 mm x 1160 mm CSPA, existing end walls and backfill off-site that are not suitable for native backfill. Installation of a new 16 m long, 2500 mm x 1830 mm corrugated steel pipe arch (CSPA). Clear stone bedding material minimum 150 mm beneath pipe, up to pipe springline (approximately 75 tonnes). Granular 'B' backfill up to the underside of Granular 'A' driveway material (approximately 115 tonnes). Native material backfill beyond edges of driveway to construct the 0.5 m wide native buffer strips (approximately 30 m^3). Granular 'A' (crushed limestone) compacted driveway surface, minimum 200 mm thickness (approximately 40 tonnes). Sloping stone end walls and lining of drain bottom with stone erosion protection to allow for excavation below proposed grade line at upstream and downstream ends of culvert (approximately 85 m^2).

- Bridge repairs, as follows:
  - Bridge No. 4 – Station 0+958 (City of Windsor) – Lining of drain bottom and drain banks on downstream and upstream ends of bridge where drain bottom falls below design grade using stone erosion protection (300 mm thickness) (approximately 260 m^2) to be embedded into drain bottom.
- Removal of access bridges, as follows:
  - Bridge No. 2 – Station 0+534 – Removal and disposal of existing 6 m long twin 1900 mm x 1050 mm CSPA, existing end walls and backfill off-site. Complete with grading and seeding of the drain banks, site clean-up and restoration within the working area.

Gouin Drain Branch North

Closed Drain Work

- Work required within property Municipal No. 1800 Corbi Lane includes:
  - Station 0+091A - Supply and installation of one (1) new 600 mm x 600 mm precast concrete catch basin (denoted CB1) complete with cast iron heavy-duty grate as manufactured by Coldstream Concrete (or approved equal) and a minimum 300 mm deep sump. The grates shall be equipped with fasteners to secure grates to catch basins as supplied by the manufacturer. Work to include connection of all new and existing pipes and grouting of all voids around pipes with non-shrink concrete grout.
  - Station 0+079A to Station 0+091A - Supply and install approximately 12 metres of 300 mm diameter solid corrugated high density polyethylene (HDPE), smooth wall, 320 kPa pipe (Boss 2000 or approved equal) with bell and spigot joining system. Join pipe with existing 300 mm diameter HDPE pipe with Fernco coupler (or approved equal). Granular 'B' bedding beneath pipe, minimum 150 mm thickness and backfill up to springline of pipe (approximately 10 tonnes). Clean native backfill material from Granular 'B' to underside of top soil (approximately 27 m^3). Minimum 50 mm thick layer of top soil above native material, fine grade and seed. Work includes removal and disposal of existing 12 metre (approx.) 1050 mm diameter corrugated steel pipe (CSP). The Contractor shall supply and install temporary construction fencing along the designated working corridor.
  - Reinstatement of fence and restoration of all disturbed areas to existing conditions.
- Work required within property Municipal No. 1806 Corbi Lane includes:
  - Station 0+112.5A - Supply and installation of one (1) new 600 mm x 600 mm precast concrete catch basin (denoted CB2) complete with cast iron heavy-duty grate as manufactured by Coldstream Concrete (or approved equal) and a minimum 300 mm deep sump. The grates shall be equipped with fasteners to secure grates to catch basins as supplied by the manufacturer. Remove and dispose a portion of existing 1050 mm diameter corrugated steel pipe (CSP) to accommodate installation of CB2. Work includes connection of all new and existing pipes and grouting of all voids around pipes with non-shrink concrete

grout.

- Station 0+091A to Station 0+112.5A - Supply and install approximately 21.5 metres of 300 mm diameter polyethylene (PE), smooth wall pipe. Work includes slipping new 300 mm diameter PE pipe into existing 1050 mm diameter corrugated steel pipe (CSP). The Contractor shall supply and install temporary construction fencing along the designated working corridor.
- Reinstatement of fence and restoration of all disturbed areas to existing conditions.

- Work required within property Municipal No. 1812 Corbi Lane includes:
  - Station 0+133A – Remove and dispose of existing catch basin maintenance hole. Supply and installation of one (1) new 600 mm x 600 mm precast concrete catch basin (denoted CB3) complete with cast iron heavy-duty grate as manufactured by Coldstream Concrete (or approved equal) and a minimum 300 mm deep sump. The grates shall be equipped with fasteners to secure grates to catch basins as supplied by the manufacturer. Remove and dispose a portion of existing 1050 mm diameter corrugated steel pipe (CSP) to accommodate installation of CB3. Work includes connection of all new and existing pipes and grouting of all voids around pipes with non-shrink concrete grout.
  - Station 0+112.5A to Station 0+133A - Supply and install approximately 20.5 metres of 300 mm diameter solid corrugated high density polyethylene (HDPE), smooth wall, 320 kPa pipe (Boss 2000 or approved equal) with bell and spigot joining system. Work includes slipping new 300 mm diameter HDPE pipe into existing 1050 mm diameter corrugated steel pipe (CSP). The Contractor shall supply and install temporary construction fencing along the designated working corridor.
  - Reinstatement of fence and restoration of all disturbed areas restored to existing conditions.
- Injection of non-shrink concrete grout to fill voids between the existing 1050 mm diameter corrugated steel pipe (CSP) and new 300 mm diameter high density polyethylene (HDPE) pipe between Station 0+091A and Station 0+133A (approximately 88 tonnes), ensuring the HDPE pipe does not shift within the CSP.

3.0 ACCESS TO THE WORK

Access to the drain from Station 0+000 to Station 0+942 shall be from E.C. Row Expressway near Bridge No. 3 at Station 0+825. Access to the drain from Station 0+982 to Station 1+104 shall be from Anchor Drive. Access to the drain from Station 1+191 to Station 2+116 shall be from E.C. Row Avenue East. Access to the drain from Station 2+116 to Station 2+758 shall be from Banwell Road using the access bridge located approximately 270 metres north of the Gouin Drain. Access to the work from Station 3+128 to Station 3+167 shall be from Shawnee Road.

Access to the work specified on Gouin Drain Branch North from Station 0+064A to Station 0+133A shall be from Gouin Street, from property Roll No. 570-43295 and Roll No. 570-43300.

All road areas, grass lawn areas and fence lines disturbed shall be restored to original conditions at the Contractor's expense. The Contractor shall make his/her own arrangements for any additional access for his/her convenience.

4.0 WORKING AREA

The Contractor shall restrict his equipment to the working corridors as specified in this Section. Any damage resulting from non-compliance with this Section shall be borne by the Contractor. The working corridor shall be measured from the top of the drain bank and shall be as follows:

FROM STA.	TO STA.	PRIMARY (See Note 1)	SECONDARY (See Note 2)
0+000	0+920	9 m wide on south side of drain	-
0+920	1+032	9 m wide on west side of drain	-
1+032	2+116	9 m wide on south side of drain	-
2+116	2+680	9 m wide on south side of drain*	6.0 m wide on north side of drain
2+680	2+758	9 m wide on west side of drain*	-
2+758	2+816	6 m centered over the drain	-
2+816	3+064	6 m centered over the drain (See Note 3)	-
3+064	3+128	2.2 m wide south of the drain and 2.8 m wide north of the drain (See Note 3)	-
3+128	3+207	6 m wide on south side of drain	-
3+207	3+286	6 m wide south of the drain and 3 m wide north of the drain	-
0+000A	0+080A	6 m centered over the drain	-
0+080A	0+198A	6 m centered over the drain	-
0+000B	0+071B	6 m centered over the drain	-

Note 1: *Primary working corridor* indicates the access corridor along the side of the drain where excavation and levelling is recommended (unless noted otherwise below and/or in the Specifications, as well as all purposes listed for Secondary Working

Corridors).

Note 2: *Secondary working corridor* indicates the access corridor alongside the drain where construction equipment may travel for the purpose of trucking, drain bank repairs, tile inlet repairs, surface water inlet repairs, grass buffer strips and other miscellaneous works. **No disposal of fill or levelling of materials shall be permitted within a secondary working corridor. As further specified, use of this secondary working corridor may be further restricted due to site condition. Read all Specifications, Drawings and/or notes before completing works.**

Note 3: The working corridor is adopting existing municipal easements.

Note:** **In the event that a landowner owns the property on both sides of the drain, the landowner can choose which side of the drain to place the spoil. The landowner should advise the Drainage Superintendent of their preference of spoil placement before improvements to the drain are made so that the Drainage Superintendent can notify the Contractor in advance.

SPECIAL PROVISIONS – OPEN DRAIN

5.0 BRUSHING

Brushing shall be carried out on the entire drain within the above identified sections of the drain where required and as specified herein. All brush and trees located within the drain side slopes shall be cut parallel to the side slopes, as close to the ground as practicable. Tree branches that overhang the drain shall be trimmed. Small branches and limbs are to be disposed of by the Contractor along with the other brush. Tree stumps, where removed to facilitate the drain excavation and reshaping of the drain banks, may be burned by the Contractor where permitted; otherwise, they shall be disposed of, off the site. The Contractor shall make every effort to preserve mature trees which are beyond the drain side slopes, and the working corridors. If requested to do so by the Drainage Superintendent, the Contractor shall preserve certain mature trees within the designated working corridors (see Section 4.0).

Except as specified herein, all brush and trees shall be stockpiled adjacent to the drain within the working corridors. Stockpiles shall not be less than 100 m apart and shall be a minimum of 2.0 m from the edge of the drain bank. All brush, timber, logs, stumps, large stones or other obstructions and deleterious materials that interfere with the construction of the drain, as encountered along the course of the drain are to be removed from the drain by the Contractor. Large stones and other similar material shall be disposed of by the Contractor off the site.

Following completion of the work, the Contractor is to trim up any broken or damaged limbs on trees which remain standing, disposing of the branches cut off along with other brush and leaving the trees in a neat and tidy condition. Brush and trees removed from the working area are to be put into piles by the Contractor, in locations where they can be safely burned, and to be burned by the Contractor after obtaining the necessary permits, as required. If, in the opinion of the Drainage Superintendent, any of the piles are too wet or green to be burned, he shall so advise the Contractor to haul away the unburned materials to an approved dump site. Prior to, and during the course of burning operations, the Contractor shall comply with the current guidelines prepared by the Air Quality Branch of the Ontario Ministry of Environment and shall ensure that the Environmental Protection Act is not violated. Since the trees and brush that are cut off flush with the earth surface may sprout new growth later, it is strongly recommended that the Municipality make arrangements for spraying this new growth at the appropriate time so as to kill the

trees and brush.

As part of this work, the Contractor shall remove any loose timber, logs, stumps, large stones or other debris from the drain bottom and from the side slopes. **Timber, logs, stumps, large stones or other debris shall be disposed of off-site.**

6.0 EXCAVATION AND LEVELLING OF EXCAVATED MATERIALS

6.1 Excavation of Existing Drain Channel

In all cases, the Contractor shall use the benchmarks to establish the proposed grade. However, for convenience, the drawings provide the approximate depth from the surface of the ground and from the existing drain bottom to the proposed grades. **THE CONTRACTOR SHALL NOT EXCAVATE DEEPER THAN THE GRADELINES SHOWN ON THE DRAWINGS**. Should over-excavation of the drain bank occur, the Contractor will **not** be permitted to repair with native material packed into place by the excavator and reshaped. Should over-excavation occur, the Contractor will be required to have a bank repair detail engineered by a Professional Engineer (hired by the Contractor), to ensure long term stability of the bank is maintained. Such repairs shall be subject to approval by the Engineer and will be at no extra cost to the item.

All excavated material shall be handled as specified in either Section 6.2 or Section 17.0. Materials deposited on the farmlands shall be within the working corridors, at least 1.0 m from the top of the drain bank, or as specified on the drawings. Upon allowing drying of excavated materials (if necessary) and as approved by the Drainage Superintendent, the Contractor shall level excavated materials in accordance with Section 6.2. Excavated material shall not be placed on dykes, in ditches, tiles or depressions intended to conduct water into the drain.

Seeding of the disturbed drain banks shall be completed immediately following drain construction and as specified in Section 8.0.

All excavation work shall be done in such a manner as to not harm any vegetation or trees, not identified in this report or by the Drainage Superintendent for clearing. Any damages to trees or vegetation caused by the Contractors work shall be rectified to the satisfaction of the Drainage Superintendent.

The Contractor shall exercise caution around existing tile inlets and shall confirm with the property owners that all tiles have been located and tile ends repaired as specified.

6.2 Levelling of Excavated Materials

Excavation of the drain bottom shall be completed as specified in Section 6.1, above

and also as specified below and as shown on the drawings.

Excavated drain materials shall be spread to a depth not to exceed 300 mm, unless specified otherwise on the drawings. The material shall be sufficiently levelled to allow further working by agricultural implements. All stones and other debris removed from the drain, which may interfere with agricultural implements, shall be disposed of off-site. Excavated material shall not be placed on dykes, in ditches, tiles or depressions intended to conduct water into the drain.

6.3 Trucking of Excavated Materials

Trucking of excavated materials to an off-site disposal site is to be arranged by the Contractor as per Section 17.0 On-site and Excess Soil Management.

The Contractor shall be solely responsible for acquiring any and all permits and approvals required prior to hauling and disposal of materials off-site. The Contractor shall restore any such areas which are damaged by his operations, to original or better condition. The Contractor will be held liable for damages to roads, sodded areas and gardens, resulting from his non-compliance with these Specifications.

7.0 STONE EROSION PROTECTION (SEP)

The Contractor shall supply and install the required quantities of graded stone rip-rap erosion protection materials where specified. All stone to be used for erosion protection shall be 125 - 250 mm clear **quarried rock** or OPSS 1001 placed over a non-woven filter fabric Terrafix 270R or approved equivalent. **Concrete rip-rap will not be permitted**.

The minimum thickness requirement of the erosion stone layer is 300 mm with no portion of the filter fabric to be exposed.

8.0 HYDRAULIC SEEDING OF DRAIN BANKS

All existing grassed areas disturbed by construction shall be hydraulic mulch seeded as specified herein. The existing ground surface to be seeded shall be loosened to a depth of 25 mm and shall be rendered uniformly loose for that 25 mm depth. The surface shall be predominantly fine and free from weeds and other unwanted vegetation. All other loose surface litter shall be removed and disposed of.

Hydraulic mulch shall consist of finely ground cellulose pulp derived from recycled newsprint and shall be dyed green. Its fiber consistency shall be approximately 60% fine fiber with the balance being paper particles, 40% of which shall be a diameter of 3 mm minimum and 6 mm maximum. Hydraulic mulch shall be applied at 2,000 kg per 10,000 m². Clean water shall be applied at 42,700 liters per 10,000 m².

Seeding and mulching shall be a one step process in which the seed, fertilizer and hydraulic mulch are applied simultaneously in a water slurry via the hydraulic seeder/mulcher. The materials shall be added to the supply tank while it is being loaded with water. The materials shall be thoroughly mixed into a homogeneous water slurry and shall be distributed uniformly over the prepared surface. The materials shall be measured by mass or by a mass-calibrated volume measurement, acceptable to the Drainage Superintendent.

The hydraulic seeder/mulcher shall be equipped with mechanical agitation equipment capable of mixing the materials into a homogenous state until applied. The discharge pumps and gun nozzles shall be capable of applying the material uniformly.

Grass seed shall be Canada No. 1 grass seed mixture meeting the requirements of a Waterway Slough Mixture as supplied by Growmark or approved equal, as follows:

Creeping Red Fescue	*20%*
Meadow Fescue	*30%*
Tall Fescue	*30%*
Timothy	*10%*
White Clover	*10%*

Bags shall bear the label of the supplier indicating the content by species, grade and mass. Seed shall be applied at a rate of 200 kg per 10,000 m².

Fertilizer shall be 8-32-16 applied at 350 kg per 10,000 m². It shall be in granular form, dry, free from lumps and in bags bearing the label of the manufacturer, indicating mass and analysis.

The hydraulic seeding shall be deemed "Completed by the Contractor" when the seed has established in all areas to the satisfaction of the Engineer. Re-seeding and/or other methods required to establish the grass will be given consideration to achieve the end result and the costs shall be incidental to the works.

9.0 GRASS BUFFER STRIPS

Grass buffer strips of 1 metre wide shall be established and preserved immediately adjacent to both banks of the new open channel. Grass buffer strips are to be established as indicated in Section 2.0 'Description of Work'. Establishment of grass buffer strips shall be executed using the same seeding methods as described in Section 10.0.

10.0 SEEDING OF GRASS BUFFER STRIPS

All disturbed grassed areas identified as new or existing grass buffers shall be seeded as specified herein. The existing ground surface to be seeded shall be loosened to a depth of 25 mm and shall be rendered uniformly loose for that 25 mm depth. The surface shall be predominantly fine and free from weeds and other unwanted vegetation. All other loose surface litter shall be removed and disposed of. If mulching is required, it shall be carried out by the contractor as part of the item's tendered price.

Grass seed shall be Canada No. 1 grass seed mixture meeting the requirements of a Waterway Slough Mixture as supplied by Growmark or approved equal, as follows:

Creeping Red Fescue	*20%*
Meadow Fescue	*30%*
Tall Fescue	*30%*
Timothy	*10%*
White Clover	*10%*

Bags shall bear the label of the supplier indicating the content by species, grade and mass. Seed shall be applied at a rate of 200 kg per 10,000 m².

Fertilizer shall be 8-32-16 applied at 350 kg per 10,000 m². It shall be in granular form, dry, free from lumps and in bags bearing the label of the manufacturer, indicating mass and analysis.

The seeding shall be deemed "Completed by the Contractor" when the seed has established in all areas to the satisfaction of the Engineer. Re-seeding and/or other methods required to establish the grass will be given consideration to achieve the end result and the costs shall be incidental to the works.

11.0 CLEANING OF PRIVATE ACCESS CULVERTS AND ROAD BRIDGES

At the locations listed below, the Contractor shall clean the existing pipes or culverts to their full capacity and cross section or width. The operation may be carried out by mechanical means or by flushing. Any damage resulting from the Contractor's operation shall be rectified at his expense. All material removed from the pipes or culverts shall be transported to a dump site arranged by the Contractor. The Contractor shall be solely responsible for acquiring all permits required for the dump site. The Contractor shall take precautions during the construction period to avoid re-sedimentation of the pipes and culverts. Any sediment deposited as a result of construction activities shall be removed at the Contractor's expense.

- Bridge No. 5 – Station 1+020, 19 m long, two 1520 mm diameter corrugated

steel pipes (CSP) road culvert.

- Bridge No. 6 – Station 1+109, 7.6 m long, 2240 mm x 1630 mm corrugated steel pipe arch (CSPA) culvert.
- Bridge No. 7 – Station 1+191, 40.5 m long, 2440 mm x 1600 mm corrugated steel pipe arch (CSPA) culvert.
- Bridge No. 13 – Station 2+116, 15.6 m long, 2240 mm x 1630 mm corrugated steel pipe arch (CSPA) road culvert.
- Bridge No. 14 – Station 2+208, 7. 8 m long, 2240 mm x 1630 mm corrugated steel pipe arch (CSPA) culvert.
- Bridge No. 15 – Station 2+359, 7.7 m long, 2240 mm x 1630 mm corrugated steel pipe arch (CSPA) culvert.
- Bridge No. 16 – Station 2+445, 7.7m long, 2240 mm x 1630 mm corrugated steel arch pipe (CSPA) culvert.
- Bridge No. 17 – Station 2+567, 7.5 m long, 2240 mm x 1630 mm corrugated steel pipe arch (CSPA) culvert.
- Bridge No. 18 – Station 2+675, 7.6 m long, 2240 mm x 1630 mm corrugated steel pipe arch (CSPA) culvert.
- Bridge No. 20 – Station 3+214, 12 m long, 760 mm diameter corrugated steel pipe (CSP) culvert.

12.0 FARM & UTILITY BRIDGE CONSTRUCTION

12.1 Location of New Bridges

The replacement of Bridge Nos. 1, 3, 6, 7, 14, 15, 17 & 18 inclusive shall be constructed in accordance with the specifications and drawings attached hereto. The centerline of the new culverts shall be located to align with the existing laneway in each case.

12.2 Removal of Existing Bridges

The Contractor shall exercise caution when removing these materials as to minimize damage to the drain banks. Any damage to the drain shall be restored to original conditions at the expense of the Contractor. The removed materials (existing culvert debris and end wall materials) shall be hauled away off-site.

12.3 Materials for New Bridges

Materials shall be as follows:

	BRIDGE WITH GRASSED TOP SURFACE (CSPA)
Culvert Pipe	**Bridge No. 1 - Station 0+200:** *New 32 m long, 2500 mm x 1830 mm aluminized Type II corrugated steel pipe arch (CSPA) wall thickness of 3.5 mm and 125 mm x 25 mm corrugations with rerolled ends. New culverts shall be joined with annular aluminized corrugated wide bolt and angle couplers (minimum of 8 corrugation overlap and 3.5 mm wall thickness) and no single pipe less than 6.0 m in length. All pipes connected with couplers shall abut to each other with no more than a 25 mm gap between pipes prior to installation of the coupler and wrapped with filter fabric.*
Pipe Bedding Below Pipe	*20-25 mm clear stone conforming to OPSS Division 10.*
Backfill up to Pipe Culvert Springline	*20-25 mm clear stone conforming to OPSS Division 10.*
Backfill Above Pipe Springline up to Bottom of Driveway Surface Materials	*Dry native material free of topsoil, organic matter, broken concrete, steel, wood and deleterious substances. Alternatively, Granular 'A' or 'B' conforming to OPSS Division 10.*
Driveway Surface	*50 mm minimum top soil, fine graded and seeded.*
Erosion Stone	*All stone to be used for erosion protection shall be 125 - 250 mm clear quarried rock or OPSS.Muni 1004, minimum 300 mm thickness.*
Driveway Buffer Strips	*Dry native material free of topsoil, organic matter, broken concrete, steel, wood and deleterious substances.*
Filter Fabric	*"Non-Woven" geotextile filter fabric with a minimum strength equal to or greater than Terrafix 270R, Amoco 4546, Mirafi 140NC or approved equivalent.*

	BRIDGE WITH ASPHALT TOP SURFACE (CSPA)
Culvert Pipe	**Bridge No. 7 - Station 1+191:** *New 41 m long, 2230 mm x 1700 mm aluminized Type II corrugated steel pipe arch (CSPA) wall thickness of 3.5 mm and 125 mm x 25 mm corrugations with rerolled ends. New culverts shall be joined with annular aluminized corrugated wide bolt and angle couplers (minimum of 8 corrugation overlap and 3.5 mm wall thickness) and no single pipe less than 6.0 m in length. All pipes connected with couplers shall abut to each other with no more than a 25 mm gap between pipes prior to installation of the coupler and wrapped with filter fabric.*
Pipe Bedding Below Pipe	*20-25 mm clear stone conforming to OPSS Division 10.*
Backfill up to Pipe Culvert Springline	*20-25 mm clear stone conforming to OPSS Division 10.*
Backfill Above Pipe Springline up to Bottom of Driveway Surface Materials	*Granular 'A' conforming to OPSS Division 10.*
Driveway Surface	*40mm HL4 Asphalt, with 60mm HL8 Base Asphalt, crowned for drainage with full compacted granular 'A' backfill below.*
Erosion Stone	*All stone to be used for erosion protection shall be 125 - 250 mm clear quarried rock or OPSS 1004, minimum 300 mm thickness.*
Buffer Strips	*Dry native material free of topsoil, organic matter, broken concrete, steel, wood and deleterious substances.*
Filter Fabric	*"Non-Woven" geotextile filter fabric with a minimum strength equal to or greater than Terrafix 270R, Amoco 4546, Mirafi 140NC or approved equivalent.*
	BRIDGE WITH GRANULAR TOP SURFACE (CSPA)
Culvert Pipe	**Bridge No. 3 - Station 0+825:** *New 16 m long, 2500 mm x 1830 mm aluminized Type II corrugated steel pipe arch (CSPA) wall thickness of 3.5 mm and 125 mm x 25 mm corrugations with rerolled ends. New culverts shall be joined with annular aluminized corrugated wide bolt and angle couplers (minimum of 8 corrugation overlap and 3.5 mm wall*

thickness) and no single pipe less than 6.0 m in length. All pipes connected with couplers shall abut to each other with no more than a 25 mm gap between pipes prior to installation of the coupler and wrapped with filter fabric.

Bridge No. 6 - Station 1+109: *New 14 m long, 2230 mm x 1700 mm aluminized Type II corrugated steel pipe arch (CSPA) wall thickness of 3.5 mm and 125 mm x 25 mm corrugations with rerolled ends. New culverts shall be joined with annular aluminized corrugated wide bolt and angle couplers (minimum of 8 corrugation overlap and 3.5 mm wall thickness) and no single pipe less than 6.0 m in length. All pipes connected with couplers shall abut to each other with no more than a 25 mm gap between pipes prior to installation of the coupler and wrapped with filter fabric.*

Bridge No. 14 - Station 2+208: *New 16 m long, 2230 mm x 1700 mm aluminized Type II corrugated steel pipe arch (CSPA) wall thickness of 3.5 mm and 125 mm x 25 mm corrugations with rerolled ends. New culverts shall be joined with annular aluminized corrugated wide bolt and angle couplers (minimum of 8 corrugation overlap and 3.5 mm wall thickness) and no single pipe less than 6.0 m in length. All pipes connected with couplers shall abut to each other with no more than a 25 mm gap between pipes prior to installation of the coupler and wrapped with filter fabric.*

Bridge No. 15 - Station 2+359: *New 16 m long, 2230 mm x 1700 mm aluminized Type II corrugated steel pipe arch (CSPA) wall thickness of 3.5 mm and 125 mm x 25 mm corrugations with rerolled ends. New culverts shall be joined with annular aluminized corrugated wide bolt and angle couplers (minimum of 8 corrugation overlap and 3.5 mm wall thickness) and no single pipe less than 6.0 m in length. All pipes connected with couplers shall abut to each other with no more than a 25 mm gap between pipes prior to installation of the coupler and wrapped with filter fabric.*

	Bridge No. 17 - Station 2+567: *New 16 m long, 2230 mm x 1700 mm aluminized Type II corrugated steel pipe arch (CSPA) wall thickness of 3.5 mm and 125 mm x 25 mm corrugations with rerolled ends. New culverts shall be joined with annular aluminized corrugated wide bolt and angle couplers (minimum of 8 corrugation overlap and 3.5 mm wall thickness) and no single pipe less than 6.0 m in length. All pipes connected with couplers shall abut to each other with no more than a 25 mm gap between pipes prior to installation of the coupler and wrapped with filter fabric.*
	Bridge No. 18 - Station 2+675: *New 16 m long, 2230 mm x 1700 mm aluminized Type II corrugated steel pipe arch (CSPA) wall thickness of 3.5 mm and 125 mm x 25 mm corrugations with rerolled ends. New culverts shall be joined with annular aluminized corrugated wide bolt and angle couplers (minimum of 8 corrugation overlap and 3.5 mm wall thickness) and no single pipe less than 6.0 m in length. All pipes connected with couplers shall abut to each other with no more than a 25 mm gap between pipes prior to installation of the coupler and wrapped with filter fabric.*
Pipe Bedding Below Pipe	*20-25 mm clear stone conforming to OPSS Division 10.*
Backfill up to Pipe Culvert Springline	*20-25 mm clear stone conforming to OPSS Division 10.*
Backfill Above Pipe Springline up to Bottom of Driveway	*Dry native material free of topsoil, organic matter, broken concrete, steel, wood and deleterious substances. Alternatively, Granular 'A' or 'B' conforming to OPSS Division 10.*
Surface Materials	
Driveway Surface	*Granular 'A' made from crushed limestone conforming to OPSS Division 10. Minimum 200 mm thickness.*
Erosion Stone	*All stone to be used for erosion protection shall be 125 - 250 mm clear quarried rock or OPSS 1004, minimum 300 mm thickness.*
Buffer Strips	*Dry native material free of topsoil, organic matter, broken concrete, steel, wood and deleterious substances.*
Filter Fabric	*"Non-Woven" geotextile filter fabric with a minimum strength equal to or greater than Terrafix 270R, Amoco 4546, Mirafi*

140NC or approved equivalent.

12.4 Culvert Installation

Suitable dykes shall be constructed in the drain so that the installation of the pipe can be accomplished in the dry. The drain bottom shall be cleaned, prepared, shaped and compacted to suit the new culvert configuration, as shown on the drawings. Granular materials shall be compacted to 100% of their maximum dry density; imported clean native materials shall be supplied, placed and compacted to 95% of their maximum dry density.

12.5 Sloping Stone End Walls

Sloping stone end walls shall be constructed of quarry stone rip-rap, as shown on the drawings and as specified in Section 7.0. Each end wall shall extend from the invert of the new culvert to the top of the proposed lane. The end walls shall be sloped 1 vertical to 1.5 horizontal, with a filter fabric underlay surrounding the pipe and spanning across the entire width of the drain. The minimum thickness requirement of the erosion stone layer is 300 mm, with no portion of the filter fabric to be exposed.

12.6 Granular 'A' Driveway

The Contractor shall construct the driveway with a maximum 3% longitudinal grade approach over the new culvert providing a minimum 300 mm cover. This work includes the installation of a minimum 200 mm thickness of compacted Granular 'A' (crushed limestone) surface. The minimum top width of the driveway shall be as shown on the drawings.

12.7 Native Materials

Native materials suitable for use as backfill, as defined under Section 10.2, shall be salvaged from the existing bridge site, as required to complete the work as shown on the drawings, **(Native Backfill Zone only)**. Where there is an insufficient amount of native fill materials for backfilling the culvert, the Contractor may elect to import additional dry native materials or alternatively use Granular 'B' at his/her own expense.

12.8 Lateral Tile Drains

Should the Contractor encounter any lateral tiles within the proposed culvert limits not shown on attached drawings, the Contractor shall re-route the outlet tile drain(s) in consultation with the Drainage Superintendent, as required, to accommodate the

new culvert. **Tile drain outlets through the wall of the new culvert pipe will not be permitted**. All costs associated with re-routing lateral tile drains (if any) shall be at the Contractor's expense.

Care must be taken in handling plastic drain pipe in cold weather to avoid causing damage.

Plastic drain pipe shall be held in position on planned grade immediately after installation by careful placement of backfill material.

13.0 ROAD CROSSING WORK ON OPEN DRAIN

13.1 Existing Structure(s)

The Contractor shall completely remove the existing road bridge(s) as follows:

- **Bridge No. 5 -** Station 1+020, (Anchor Drive), consisting of two 19 m long, 1520 mm diameter corrugated steel pipes (CSP) with concrete block end walls.
- **Bridge No. 13 -** Station 2+116, (Banwell Road), consisting of a 15.6 m long, 2240 mm x 1630 mm corrugated steel pipe arch (CSPA) with rip rap end protection.
- **Bridge No. 20** – Station 3+214 (Shawnee Road), consisting of a 12 m long, 760 mm diameter corrugated steel pipe (CSP) with rip rap end protection on the pipe outlet and 900 mm diameter CSP catch basin at the pipe inlet.

Dry, native material, free of topsoil, organic matter, broken concrete, steel, wood and deleterious substances may be used as native backfill for the new bridge beyond the limits of the road surface and shoulders. All excess materials removed from the existing bridge structure that are not suitable to use as native backfill, shall be disposed of, off the site. Such materials include rubber tires, poured concrete end walls, broken concrete, stones, wood, metal, etc.

13.2 Location of Bridge Replacement

The bridge replacements shall be located and installed as shown on the drawings.

13.3 Materials for New Bridge

Materials shall be as follows:

Culvert Pipe	**Bridge No. 5 - Station 1+020:** *Two new 18.0 m long, 1500 mm diameter high quality concrete pipe (CSA A-257.2, Class 65-D) complete with clear stone bedding, full Granular 'A' backfill.*

Pipe Bedding Below Pipe	*20-25 mm clear stone conforming to OPSS Division 10.*
Backfill up to underside of Roadway Surface	*Granular 'A' conforming to OPSS Division 10.*
Roadway Surface	*40mm HL4 Asphalt, with 60mm HL8 Base Asphalt, crowned for drainage with full compacted granular 'A' backfill below.*
Erosion Stone	*All stone to be used for erosion protection shall be 125 - 250 mm clear quarried rock or OPSS 1004, minimum 300 mm thickness.*
Precast Interlocking Concrete Blocks	*New Concrete lock blocks, 600 mm x 600 mm x 3000 mm, 600 mm x 600 mm x 2400 mm, 600 mm x 600 mm x 1200 mm, 600 mm x 600 mm x 600 mm, with filter fabric underlay.*
Filter Fabric	*"Non-Woven" geotextile filter fabric with a minimum strength equal to or greater than Terrafix 270R, Amoco 4546, Mirafi 140NC or approved equivalent.*
Culvert Pipe	**Bridge No. 13 - Station 2+116:** *New 18 m long, 2500 mm x 1830 mm polymer laminated corrugated steel pipe arch (CSPA) wall thickness of 3.5 mm and 125 mm x 25 mm corrugations with rerolled ends. New culverts shall be joined with annular polymer laminated corrugated wide bolt and angle couplers (minimum of 8 corrugation overlap and 3.5 mm wall thickness) and no single pipe less than 6.0 m in length. All pipes connected with couplers shall abut to each other with no more than a 25 mm gap between pipes prior to installation of the coupler and wrapped with filter fabric.*
Pipe Bedding Below Pipe	*20-25 mm clear stone conforming to OPSS Division 10.*
Backfill up to Pipe Culvert Springline	*20-25 mm clear stone conforming to OPSS Division 10.*
Backfill up to underside of Roadway Surface and Shoulders	*Granular 'A' conforming to OPSS Division 10.*
Roadway Surface	*40mm HL4 Asphalt, with 60mm HL8 Base Asphalt.*
Precast Interlocking Concrete Blocks	*New Concrete lock blocks, 600 mm x 600 mm x 3000 mm, 600 mm x 600 mm x 1200 mm, 600 mm x 600 mm x 600 mm, with*

	filter fabric underlay.
Erosion Stone	*All stone to be used for erosion protection shall be 125 - 250 mm clear quarried rock or OPSS 1004, minimum 300 mm thickness.*
Buffer Strips	*Dry native material free of topsoil, organic matter, broken concrete, steel, wood and deleterious substances.*
Filter Fabric	*"Non-Woven" geotextile filter fabric with a minimum strength equal to or greater than Terrafix 270R, Amoco 4546, and Mirafi 140NC or approved equivalent.*
Culvert Pipe	**Bridge No. 20 - Station 3+214:** *New 12 m long, 750 mm diameter polymer laminated corrugated steel pipe (CSP) wall thickness of 2.8 mm and 68 mm x 13 mm corrugations with rerolled ends. New culverts shall be joined with annular polymer laminated corrugated wide bolt and angle couplers (minimum of 8 corrugation overlap and 2.8 mm wall thickness) and no single pipe less than 6.0 m in length. All pipes connected with couplers shall abut to each other with no more than a 25 mm gap between pipes prior to installation of the coupler and wrapped with filter fabric.*
Pipe Bedding Below Pipe	*20-25 mm clear stone conforming to OPSS Division 10.*
Backfill up to Pipe Culvert Springline	*Granular 'A' conforming to OPSS Division 10.*
Backfill up to underside of Roadway Surface and Shoulders	*Granular 'A' conforming to OPSS Division 10.*
Backfill up to underside of Surface material outside of roadway	*Dry native material free of topsoil, organic matter, broken concrete, steel, wood and deleterious substances. Alternatively, the Contractor may elect to use full compacted granular 'A' backfill at their expense.*
Roadway Surface	*40mm HL4 Asphalt, with 60mm HL8 Base Asphalt.*
Grassed Surface outside of roadway	*50 mm minimum top soil, fine graded and seeded*
Erosion Stone	*All stone to be used for erosion protection shall be 125 - 250 mm clear quarried rock or OPSS 1004, minimum 300 mm thickness.*

Buffer Strips	*Dry native material free of topsoil, organic matter, broken concrete, steel, wood and deleterious substances.*
Filter Fabric	*"Non-Woven" geotextile filter fabric with a minimum strength equal to or greater than Terrafix 270R, Amoco 4546, and Mirafi 140NC or approved equivalent.*

13.4 Lateral Tile Drains

Should the Contractor encounter any lateral tiles within the proposed culvert limits not shown on attached drawings, the Contractor shall re-route the outlet tile drain(s) in consultation with the Drainage Superintendent, as required, to accommodate the new culvert. **Tile drain outlets through the wall of the new culvert pipe will not be permitted**. All costs associated with re-routing lateral tile drains (if any) shall be at the Contractor's expense.

13.5 Culvert Installation

Suitable dykes shall be constructed in the drain so that the installation of the pipe can be accomplished in the dry. The drain bottom shall be cleaned, prepared, shaped and compacted to suit the new culvert configuration, as shown on the drawings. Granular materials shall be compacted to 100% of their maximum dry density; native materials shall be compacted to 95% of their maximum dry density.

13.6 Vertical Concrete Lock Block End Walls (Bridge No. 5 & Bridge No. 13)

End walls shall be constructed of interlocking concrete blocks as shown on the attached drawings using 600 mm wide x 600 mm high x 1200 mm long blocks. Where specified, the contractor shall make use of half blocks (600 mm x 600 mm x 600 mm), 3000 mm long blocks (600 mm x 600 mm x 3000 mm), and 2400 mm long blocks (600 mm x 600 mm x 2400 mm). Each end wall shall extend from the invert of the new culvert to the top of the proposed driveway. The concrete block end walls shall be set at a 10:1(V:H) batter. The concrete block end walls shall be keyed into the existing drain banks and provided with a filter fabric backing to separate the backfill materials from the concrete blocks. All void space between the culvert and the concrete blocks shall be filled with concrete minimum 30 MPa compressive strength.

Other styles and sizes of concrete blocks may be considered for the construction of the end walls. If the Contractor wishes to use concrete blocks that vary from the style or size specified, he/she shall submit the manufacturers block Specifications and an intended block layout plan to the Drainage Superintendent and/or the Engineer prior to commencing construction. Any additional costs incurred from the use of alternative blocks shall be the Contractor’s responsibility.

13.7 Native Materials

Native materials suitable for use as backfill, as defined under Section 13.3, shall be salvaged from the existing bridge site as required to complete the work as shown on the drawings. Any surplus native materials (if any) not required in the bridge installation shall be managed by the Contractor at their expense in accordance with Section 16.2.

13.8 Relocation of Existing Road Crossing (Bridge No. 5)

The Contractor shall relocate the existing 750 mm diameter corrugated steel pipe crossing Anchor Drive into the Gouin Drain as shown on the drawings. The Contractor shall supply and install a 45o CSP ‘elbow’ and a concrete 1500 mm x 750 mm ‘tee’ as necessary to complete the connection.

13.9 Driveway Restoration

The Contractor shall construct the driveway as shown on the drawings. This work includes the removal of topsoil, placement of compacted native material, and the installation of a minimum of 200 mm of compacted Granular 'A' surface (crushed limestone). The width of the driveway and layout of gravel surface shall be as shown on the drawings.

13.10 Site Cleanup and Restoration

As part of the work and upon completion, the Contractor shall remove and dispose of, off-site any loose timber, logs, stumps, large stones, rubber tires, cinder blocks or other debris from the drain bottom and from the side slopes. Where the construction works cross a lawn, the Contractor shall take extreme care to avoid damaging the lawn, shrubs and trees encountered. Upon completion of the work, the Contractor shall completely restore the area by the placement and fine grading of topsoil and seeding or sodding the area as specified by the Engineer or Drainage Superintendent.

14.0 NEW CATCH BASINS

The Contractor shall arrange for the supply and installation of pre-cast concrete catch basins at the locations and elevations as shown on the plans and profiles.

The Contractor shall install all precast structures plumb and true to line and grade. Precast bases shall be set to the specified grade, shall be level, and shall have uniform overall contact with the underlying soil.

All catch basins installed shall meet the dimensions and locations outlined in the drawings. Precast concrete catch basins shall conform to the requirements of

Ontario Provincial Standard Specification (OPSS 1351). The floor elevation shall be at least 300 mm below the invert of the outlet pipe in the wall of the catch basin.

Pipe placed in the walls for inlet and outlet connections shall extend through the wall a sufficient distance to allow for connections. The pipes shall be trimmed flush with the inside wall and shall be securely sealed into place using grout.

All catch basins shall be manufactured to allow for a minimum 150 mm height of riser adjustment rings to permit elevation modifications if required.

Catch basins shall be backfilled with clean native material in maximum 300 mm lifts and compacted to 98% of the maximum standard proctor density.

13.11 Catch Basin No. 1 to No. 3 (Gouin Drain Branch North)

Catch basin No. 1 to No. 3 shall be as per OPSD 705.010 and be supplied with cast iron frame and grate as per OPSD 400.02.

13.12 Catch Basin No. 11 (Shawnee Road)

Catch basin No. 11 shall be 900 mm x 1200 mm in size, and be supplied with a heavy duty galvanized steel flap top grate, both as manufactured by Coldstream Concrete or approved equal. The grate is to be equipped with equipped with fasteners to secure the grate to the catch basin as supplied by the manufacture.

Existing pipes within CB11 are to be reconnected to the new catch basin with new BOSS 2000 HDPE pipes and Fernco couplers, or approved equivalents.

15.0 REPLACEMENT AND SLIP-LINING OF ENCLOSED DRAIN

The Contractor shall repair the Gouin Drain Branch North as outlined on the drawings appended hereto to the dimensions and location shown. Prior to work, the Contractor shall remove and dispose of existing catch basin maintenance hole at CB3 location, and prepare existing 1050 mm diameter corrugated steel pipe for repair by cutting out a section of pipe in order to receive the proposed pre-cast concrete catch basin. The Contractor shall take care not to damage existing backyard structures. Cost to repair damaged property shall be at the Contractor's expense.

15.1 Pipe Slip-Lining (Station 0+091A to Station 0+133A)

The Contractor shall slip-line the existing 1050 mm diameter corrugated steel pipe between Station 0+091A and Station 0+133A with a 300 mm diameter high density polyethylene, smooth wall pipe positioned so the bottom of the 300 mm diameter pipe meets the invert of the 1050 mm diameter pipe along the entire length of the pipe.

Work includes fixing the new 300 mm diameter pipe to the existing 1050 mm diameter pipe and filling voids between pipes with non-shrink flowable backfill material. The non-shrink backfill shall consist of pre-mixed sand and Portland cement slurry provided by the concrete truck with pumping unit. The Contractor shall confirm with the owners and Municipality that all private drain connections to the old pipe have been found and are connected to the new 300 mm diameter HDPE pipe prior to infilling.

15.2 Pipe Replacement (Station 0+079A to Station 0+091A)

The Contractor shall remove and dispose of the existing 1050 mm diameter corrugated steel pipe from the proposed location of the new catch basin (CB1) at Station 0+091A to the downstream end of the 1050 mm diameter pipe where the Contractor shall expose and connect to the existing 300 mm diameter plastic pipe using a Fernco coupler.

15.3 Drainage Pipe Materials

15.3.1 H.D.P.E. Pipe

Gouin Drain Branch North (Sta. 0+064A to Sta. 0+113A)	*New 300 mm (12") diameter solid (non-perforated) corrugated High Density Polyethylene (H.D.P.E.) smooth wall interior (Armtec Boss 2000 or approved equivalent) unless otherwise specified conforming to the following specifications: ASTM @3350, CSA B182.8-02 and OPSS 1840. The pipe is to provide a minimum pipe stiffness of 320 kPa. Joined using (soil tight) "gasketed bell & spigot" Ultra Stab joining system (as manufactured by Armtec Limited or approved equal), supplied by the pipe manufacturer and conforming to ASTM D3350, CSA 182.8-02 and OPSS 1840.*
Pipe Bedding	*Granular 'B' conforming to OPSS Division 10 to springline of pipe.*
Backfill except under driveways	*Dry native material free of topsoil, organic matter, broken concrete, steel, wood and deleterious substances.*
Topsoil Surface	*Salvaged topsoil minimum 100 mm thickness.*

15.4 Site Cleanup and Restoration

The Contractor shall reinstate the property fence lines that were removed in order to

access the work. As part of the work and upon completion, the Contractor shall remove and dispose of, off-site any loose timber, logs, stumps, large stones, rubber tires, cinder blocks or other debris from the drain bottom and from the side slopes. Where the construction works cross a lawn, the Contractor shall take extreme care to avoid damaging the lawn, shrubs and trees encountered. Upon completion of the work, the Contractor shall completely restore the area by the placement and fine grading of topsoil and seeding or sodding the area as specified by the Engineer or Drainage Superintendent.

16.0 TEMPORARY CONSTRUCTION FENCING

The Contractor shall erect, maintain and relocate as necessary to suit construction, 1.8 metre tall rigid temporary construction fencing to meet the requirements of the Ministry of Labour. The fencing is to surround the working corridor between Stations 0+079A and 0+133A of Gouin Drain Branch North. The Contractor will ensure that sufficient labour is provided to maintain the fencing on a daily basis, as well as to relocate the fencing as considered necessary to complete the work.

17.0 ON-SITE AND EXCESS SOIL MANAGEMENT

The Contractor's attention is hereby drawn to the fact that construction of this Contract will necessitate special measures being taken with respect to the management of on-site and excess soil to meet the requirements of Ontario Regulation 406/19 On-Site and Excess Soil Management and supporting documents, in particular the Rules for Soil Management and Excess Soil Quality Standards, MECP, December 2019.

The Contractor shall prepare an excavation contingency plan in compliance with Section 23 of O.Reg. 406/19 and submit the procedure to the Owner for review and approval prior to excavating any soil in the Project Area.

The Contractor is responsible for ensuring that any vehicle hauling excess soil from the project area meets the criteria listed in Section 17 of O.Reg 406/19 and can provide the information set out in Section 18 of O.Reg. 406/19 upon request.

Excavated material originating from the drain between Station 1+109 and Station 3+286 may be handled according to Schedule 2, Section 3, paragraph 6 of O.Reg. 406/19. Should the abutting landowner request the excavated material to remain on site, the Contractor shall transport the excavated material to a location specified by the Drainage Superintendent within the abutting lands.

In general, on-site storage will not be permitted, unless special approval is provided by the Town. If required and approved, on-site soil storage shall comply with the Soil

Storage Rules set out in Section C of the Rules for Soil Management and Excess Soil Quality Standards.

17.1 Chemical Soils Analysis and Results

An Environmental Review Report and Soil Characterization Report (both dated April 26, 2021) have been prepared for the Project Area.

As described in the Soil Characterization Report, soils excavated between Station 0+163 and Station 1+020 are recommended to be managed as follows:

- Soils between TP-101 and TP-105 may be reused at a receiving site that accepts soils meeting Table 3.1 Residential, Parkland and Institutional (RPI) and/or Table 3.1 Industrial, Commercial and Community (ICC) Excess Soil Quality Standards (ESQS), with salt parameter exemptions, pending review and acceptance by the reviewer. These soils are not suitable for receivers that do not accept salt-impacted soils. Part I Section D.1 (3) of the Rules for Soil Management and Excess Soil Quality Standards prescribed the following reuse conditions for excess soil with salt (sodium adsorption ratio and electrical conductivity) impacts.
    - The excess soil is finally placed at one of the following locations:
        - Where it is reasonable to expect that the soil will be affected by the same chemicals as a result of continued application of a substance for the safety of vehicular or pedestrian traffic under conditions of snow or ice;
        - At an industrial or commercial property use and to which non-potable standards would be applicable; or
        - At least 1.5 metres below the surface of the soil.
    - The excess soil is not finally placed at any of the following locations:
        - Within 30 metres of a waterbody;
        - Within 100 metres of a potable water well or area with an intended property use that may require a potable water well; or
        - A location that will be used for growing crops or pasturing livestock unless the excess soil is placed 1.5 metres or greater below the soil surface.
    - The project leader or operator of the Project Area has informed the reuse site owner or operator that the excess soil is from a location that may be expected to contain the chemical and, if sampling and

analysis has been conducted in accordance with the Regulation, the project leader or operator of the Project Area has provided relevant sampling results to the reuse site owner or operator, including the soil characterization report if prepared, and identified and communicated any potential risks to surface water and ground water to the reuse site owner or operator.

Soils east of TP-105 contain exceedances of the Table 3.1 RPI and ICC ESQS for non-salt related parameters (i.e., cyanide, zinc and petroleum hydrocarbons (PHCs), fractions F2 and F3). These soils are not isolated to a single location and are present throughout this zone. These soils are not suitable for reuse and will require management as waste at an appropriate facility.

Should construction extend west of TP-101, based on the heterogeneity of the soil quality observed and absence of sampling data west of TP-101, these soils should be managed as waste.

If construction constraints do not allow for the segregation of soils between TP-101 and TP-105, all soils are to be managed as waste.

The Contractor shall not claim any misunderstanding with regard to subsurface physical or chemical conditions provided in the reports for this contract. No claims related to Contract delays while obtaining an approved disposal/reuse site will be paid to the Contractor.

17.2 Excess Excavated Material

Material excavated in carrying out the work of the various tender items included in this Contract which is surplus to the requirements of the Contract shall be reused offsite at the Contractor's expense in accordance with OPSS 180. It is the Contractor’s responsibility to find a suitable reuse site and no claims related to Contract delays while obtaining an approved reuse site will be paid to the Contractor. Any additional chemical testing required by reuse sites shall be at the Contractor’s expense. The Contractor shall determine the appropriate reuse site and all costs associated with the disposal shall be at the Contractor’s expense.

All excess soils must be finally placed within a period of 90 days following excavation.

The Contractor shall provide the Contract Administrator with a copy of OPSF 180-2 form, “SITE SELECTION NOTIFICATION FOR MATERIAL MANAGED AS DISPOSABLE FILL” as well as a copy of OPSF 180-3 form, “PROPERTY OWNER’S RELEASE” two weeks prior to the start of excavation activities. The Contractor shall certify that soil

reuse sites can accept the volume and quality of excess soil being transported from the project area. The Contractor is not permitted to start any excavation works until these forms have been signed and provided the Contract Administrator.

This item applies to any item that includes excavation, removal and reuse of excess material. All costs associated with the requirements of this special provision are to be included within the unit prices for those items.

17.3 Payment

There is no payment associated with this special provision. The costs associated with these requirements are to be included within the unit prices for the items which require excess materials management.

GENERAL SPECIFICATIONS

1.0 AGREEMENT AND GENERAL CONDITIONS

The part of the Specifications headed "Special Provisions" which is attached hereto forms part of this Specification and is to be read with it. Where there is any difference between the requirements of this General Specification and those of the Special Provisions, the Special Provisions shall govern.

Where the word "Drainage Superintendent" is used in this specification, it shall mean the person or persons appointed by the Council of the Municipality having jurisdiction to superintend the work.

Tenders will be received and contracts awarded only in the form of a lump sum contract for the completion of the whole work or of specified sections thereof. The Tenderer agrees to enter into a formal contract with the Municipality upon acceptance of the tender. The General Conditions of the contract and Form of Agreement shall be those of the Stipulated Price Contract CCDC2-Engineers, 1994 or the most recent revision of this document.

2.0 EXAMINATION OF SITE, PLANS AND SPECIFICATIONS

Each tenderer must visit the site and review the plans and specifications before submitting his/her tender and must satisfy himself/herself as to the extent of the work and local conditions to be met during the construction. Claims made at any time after submission of his/her tender that there was any misunderstanding of the terms and conditions of the contract relating to site conditions, will not be allowed. The Contractor will be at liberty, before bidding to examine any data in the possession of the Municipality or of the Engineer.

The quantities shown or indicated on the drawings or in the report are estimates only and are for the sole purpose of indicating to the tenderers the general magnitude of the work. The tenderer is responsible for checking the quantities for accuracy prior to submitting his/her tender.

3.0 MAINTENANCE PERIOD

The successful Tenderer shall guarantee the work for a period of one (1) year from the date of acceptance thereof from deficiencies that, in the opinion of the Engineer, were caused by faulty workmanship or materials. The successful Tenderer shall, at his/her own expense, make good and repair deficiencies and every part thereof, all to the satisfaction of the Engineer. Should the successful Tenderer for any cause, fail

to do so, then the Municipality may do so and employ such other person or persons as the Engineer may deem proper to make such repairs or do such work, and the whole costs, charges and expense so incurred may be deducted from any amount due to the Tenderer or may be collected otherwise by the Municipality from the Tenderer.

4.0 GENERAL CO-ORDINATION

The Contractor shall be responsible for the coordination between the working forces of other organizations and utility companies in connection with this work. The Contractor shall have no cause of action against the Municipality or the Engineer for delays based on the allegation that the site of the work was not made available to him by the Municipality or the Engineer by reason of the acts, omissions, misfeasance or non-feasance of other organizations or utility companies engaged in other work.

5.0 RESPONSIBILITY FOR DAMAGES TO UTILITIES

The Contractor shall note that overhead and underground utilities such as hydro, gas, telephone and water are not necessarily shown on the drawings. It is the Contractor's responsibility to contact utility companies for information regarding utilities, to exercise the necessary care in construction operations and to take other precautions to safeguard the utilities from damage. All work on or adjacent to any utility, pipeline, railway, etc., is to be carried out in accordance with the requirements of the utility, pipeline, railway, or other, as the case may be, and its specifications for such work are to be followed as if they were part of this specification. The Contractor will be liable for any damage to utilities.

6.0 CONTRACTOR’S LIABILITY

The Contractor, his/her agents and all workmen or persons under his/her control including sub-contractors, shall use due care that no person or property is injured and that no rights are infringed in the prosecution of the work. The Contractor shall be solely responsible for all damages, by whomsoever claimable, in respect to any injury to persons or property of whatever description and in respect of any infringement of any right, privilege or easement whatever, occasioned in the carrying on of the work, or by any neglect on the Contractor's part.

The Contractor, shall indemnify and hold harmless the Municipality and the Engineer, their agents and employees from and against claims, demands, losses, costs, damages, actions, suits, or proceedings arising out of or attributable to the Contractor's performance of the contract.

7.0 PROPERTY BARS AND SURVEY MONUMENTS

The Contractor shall be responsible for marking and protecting all property bars and survey monuments during construction. All missing, disturbed or damaged property bars and survey monuments shall be replaced at the Contractor's expense, by an Ontario Land Surveyor.

8.0 MAINTENANCE OF FLOW

The Contractor shall, at his/her own cost and expense, permanently provide for and maintain the flow of all drains, ditches and water courses that may be encountered during the progress of the work.

9.0 ONTARIO PROVINCIAL STANDARDS

Ontario Provincial Standard Specifications (OPSS) and Ontario Provincial Standard Drawings (OPSD) shall apply and govern at all times unless otherwise amended or extended in these Specifications or on the Drawing. Access to the electronic version of the Ontario Provincial Standards is available online through the MTO website, free of charge to all users. To access the electronic standards on the Web, go to http://www.mto.gov.on.ca/english/transrd/. Under the title Technical Manuals is a link to the Ontario Provincial Standards. Users require Adobe Acrobat to view all pdf files.

10.0 APPROVALS, PERMITS AND NOTICES

The construction of the works and all operations connected therewith are subject to the approval, inspection, by-laws and regulations of all Municipal, Provincial, Federal and other authorities having jurisdiction in respect to any matters embraced in this Contract. The Contractor shall obtain all approvals and permits and notify the affected authorities when carrying out work in the vicinity of any public utility, power, underground cables, railways, etc.

11.0 SUBLETTING

The Contractor shall keep the work under his/her personal control, and shall not assign, transfer, or sublet any portion without first obtaining the written consent of the Municipality.

12.0 TIME OF COMPLETION

The Contractor shall complete all work on or before the date fixed at the time of tendering. The Contractor will be held liable for any damages or expenses occasioned by his/her failure to complete the work on time and for any expenses of inspection, superintending, re-tendering or re-surveying, due to their neglect or failure to carry out the work in a timely manner.

13.0 TRAFFIC CONTROL

The Contractor will be required to control vehicular and pedestrian traffic along roads at all times and shall, at his/her own expense, provide for placing and maintaining such barricades, signs, flags, lights and flag persons as may be required to ensure public safety. The Contractor will be solely responsible for controlling traffic and shall appoint a representative to maintain the signs and warning lights at night, on weekends and holidays and at all other times that work is not in progress. All traffic control during construction shall be strictly in accordance with the **Occupational Health and Safety Act** and the current version of the **Ontario Traffic Manuals**. Access to the electronic version of the **Ontario Traffic Manual** is available online through the MTO website, free of charge to all users. To access the electronic standards on the Web, go to http://www.mto.gov.on.ca/english/transrd/, click on "Library Catalogue," under the "Title," enter "Ontario Traffic Manual" as the search. Open the applicable "Manual(s)" by choosing the "Access Key," once open look for the "Attachment," click the pdf file. Users require Adobe Acrobat to view all pdf files.

Contractors are reminded of the requirements of the Occupational Health and Safety Act pertaining to Traffic Protection Plans for workers and Traffic Control Plan for Public Safety.

14.0 SITE CLEANUP AND RESTORATION

As part of the work and upon completion, the Contractor shall remove and dispose of, off-site any loose timber, logs, stumps, large stones, rubber tires, cinder blocks or other debris from the drain bottom and from the side slopes. Where the construction works cross a lawn, the Contractor shall take extreme care to avoid damaging the lawn, shrubs and trees encountered. Upon completion of the work, the Contractor shall completely restore the area by the placement and fine grading of topsoil and seeding or sodding the area as specified by the Engineer or Drainage Superintendent.

15.0 UTILITY RELOCATION WORKS

In accordance with Section 26 of the Drainage Act, if utilities are encountered during the installation of the drainage works that conflict with the placement of the new culvert, the operating utility company shall relocate the utility at their own costs. The Contractor however will be responsible to co-ordinate these required relocations (if any) and their co-ordination work shall be considered incidental to the drainage works.

16.0 FINAL INSPECTION

All work shall be carried out to the satisfaction of the Drainage Superintendent for the Municipality, in compliance with the specifications, drawings and the Drainage Act. Upon completion of the project, the work will be inspected by the Engineer and the Drainage Superintendent. Any deficiencies noted during the final inspection shall be immediately rectified by the Contractor.

Final inspection will be made by the Engineer within 20 days after the Drainage Superintendent has received notice in writing from the Contractor that the work is completed, or as soon thereafter as weather conditions permit.

17.0 FISHERIES CONCERNS

Standard practices to be followed to minimize disruption to fish habitat include embedment of the culvert a minimum 10% below grade, constructing the work 'in the dry' and cutting only trees necessary to do the work (no clear-cutting). No in-water work is to occur during the timing window unless otherwise approved by the appropriate authorities.

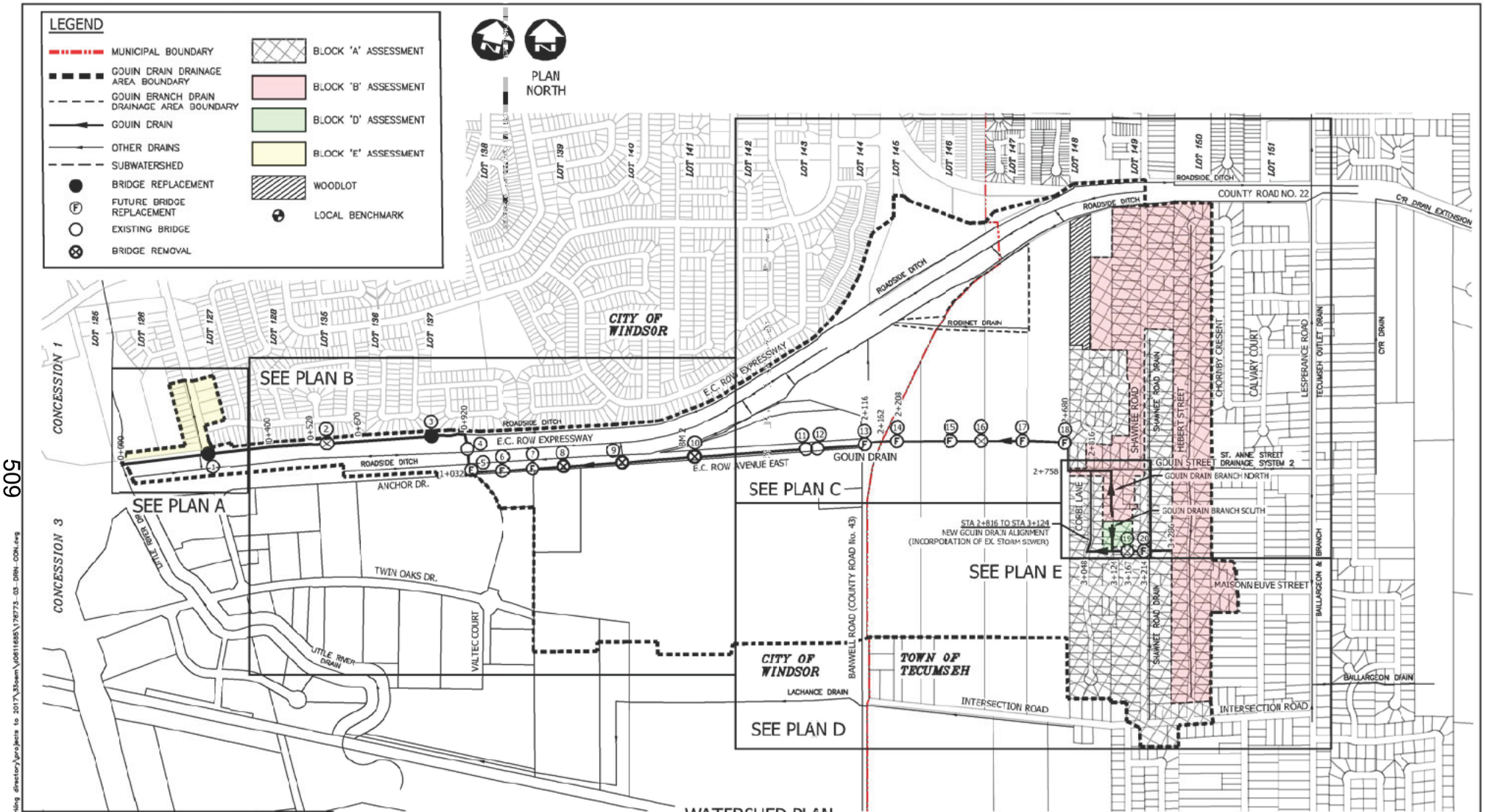

WATERSHED PLAN
SCALE=1:10,000

'SCHEDULE G'

LICENSED PROFESSIONAL ENGINEER
M. D. HERNANDEZ
100078099
Jan 20/23
PROVINCE OF ONTARIO

Conditions of Use

Verify elevations and/or dimensions on drawing prior to use. Report any discrepancies to Dillon Consulting Limited.

Do not scale dimensions from drawing.

Do not modify drawing, re-use it, or use it for purposes other than those intended at the time of its preparation without prior written permission from Dillon Consulting Limited.

No	ISSUED FOR	DATE	BY
3	FINAL REPORT SUBMISSION	20 JAN 23	MDH
2	PUBLIC INFORMATION CENTRE	25 MAR 22	MDH
1	CLIENT REVIEW	4 MAR 22	MDH

DESIGN: MDH	REVIEWED BY: CDP
DRAWN: KAW/OEM	CHECKED BY: TRO
DATE: January 20, 2023	
SCALE: AS SHOWN	

DILLON CONSULTING

PROJECT NO: 17-6773

DRAWING SCALES BASED ON A 11" X 17" SHEET

Drainage Report for the
GOUIN DRAIN
Town of Tecumseh & City of Windsor

SHEET TITLE: OVERALL WATERSHED PLAN

PAGE NO: 1 of 21

Jan 20, 2023 – 10:04am C:\pw working directory\projects to 2017\33sem\06816985\176773-03-DRN-CON.dwg

LEGEND

- MUNICIPAL BOUNDARY
- GOUIN DRAIN DRAINAGE AREA BOUNDARY
- GOUIN BRANCH DRAIN DRAINAGE AREA BOUNDARY
- GOUIN DRAIN
- OTHER DRAINS
- SUBWATERSHED
- BLOCK 'E' ASSESSMENT
- BRIDGE REPLACEMENT
- FUTURE BRIDGE REPLACEMENT
- EXISTING BRIDGE
- BRIDGE REMOVAL
- LOCAL BENCHMARK

PLAN NORTH

NOTES:
1. BENCHMARK INFORMATION ON SHEET 13

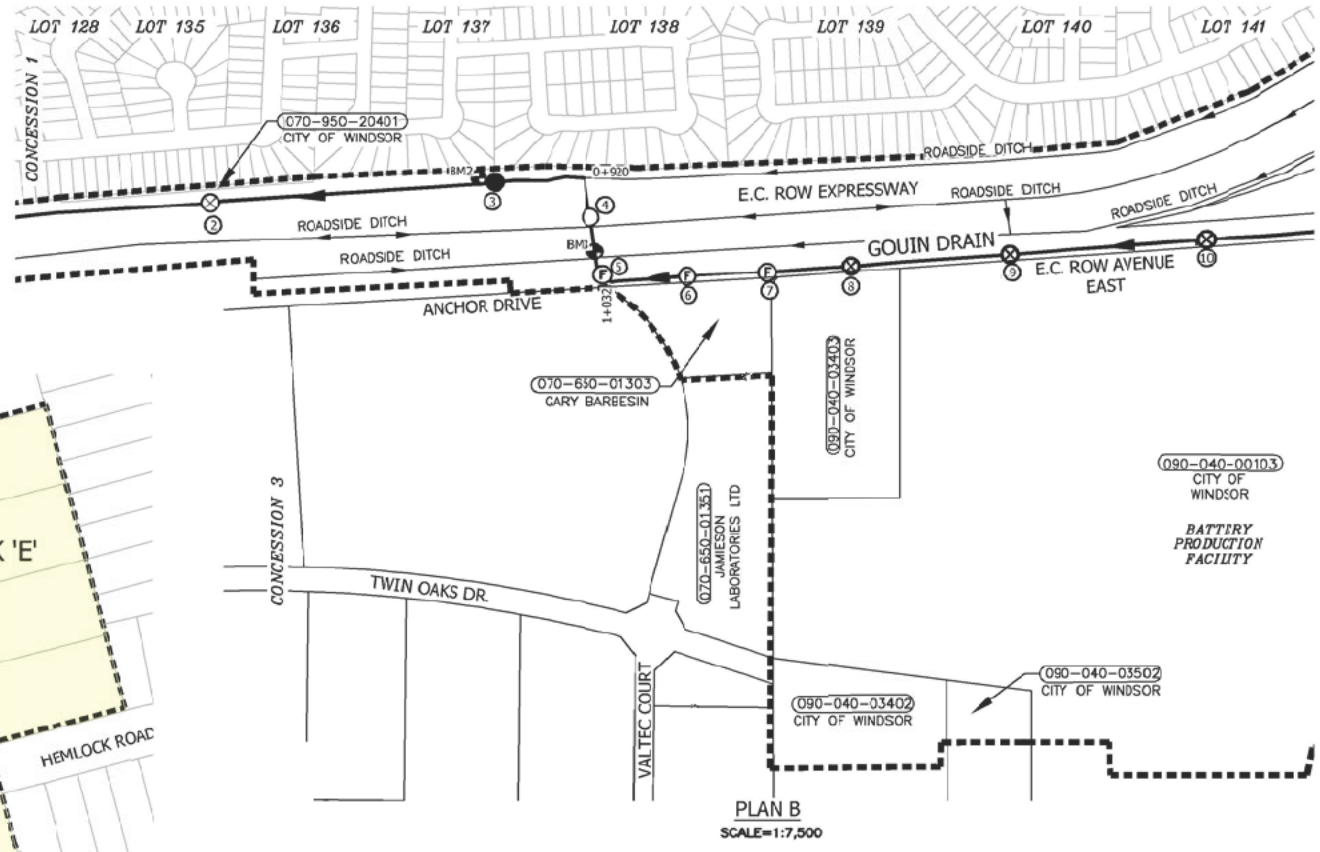

PLAN B
SCALE=1:7,500

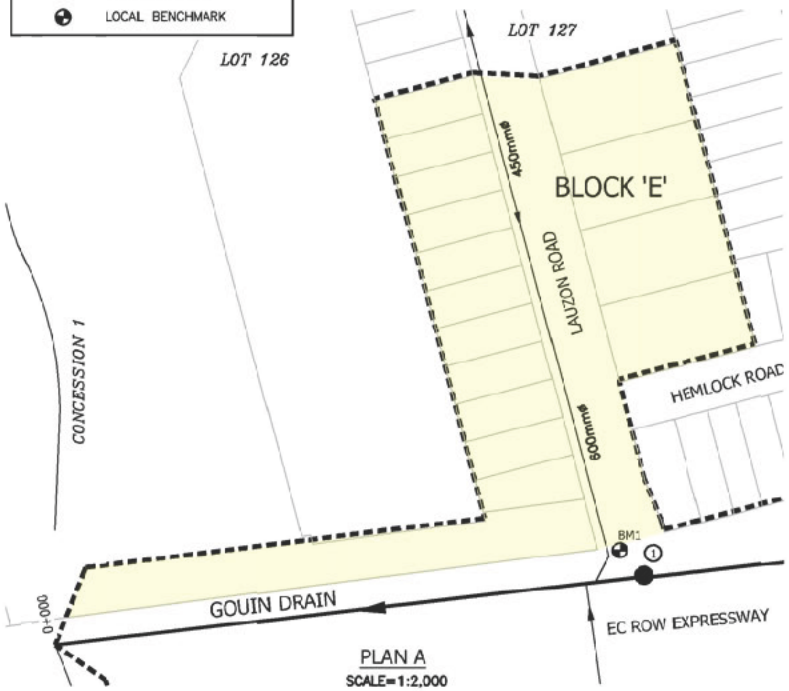

PLAN A
SCALE=1:2,000

LICENSED PROFESSIONAL ENGINEER
M. D. HERNANDEZ
100078099
Jan 20/23
PROVINCE OF ONTARIO

Conditions of Use

Verify elevations and/or dimensions on drawing prior to use. Report any discrepancies to Dillon Consulting Limited.

Do not scale dimensions from drawing.

Do not modify drawing, re-use it, or use it for purposes other than those intended at the time of its preparation without prior written permission from Dillon Consulting Limited.

No.	ISSUED FOR	DATE	BY
3	FINAL REPORT SUBMISSION	20 JAN 23	MDH
2	PUBLIC INFORMATION CENTRE	25 MAR 22	MDH
1	CLIENT REVIEW	4 MAR 22	MDH

DESIGN	MDH
REVIEWED BY	CDP
DRAWN	KAW/CEM
CHECKED BY	TRO
DATE	January 20, 2023
SCALE	AS SHOWN

DILLON CONSULTING

PROJECT NO 17-6773

DRAWING SCALES BASED ON A 11" X 17" SHEET

'SCHEDULE G'

Drainage Report for the
GOUIN DRAIN
Town of Tecumseh & City of Windsor

SHEET TITLE
PLAN A & B

PAGE NO. 2 of 21

Jan 20, 2023 – 10:04am G:\pw working directory\projects to 2017\33sem\j061168\17-6773-03-DRN-CON.dwg

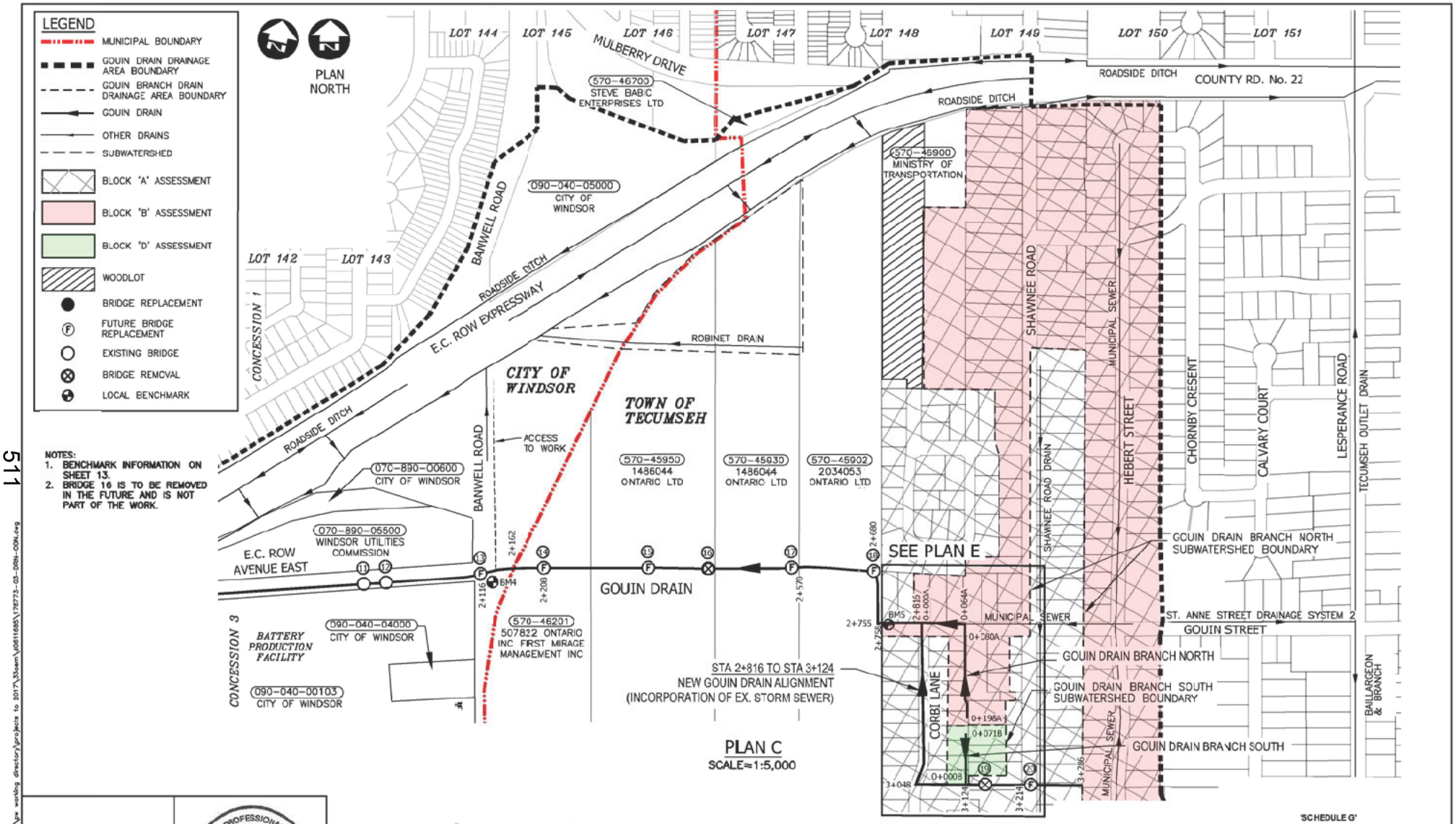

NOTES:
1. BENCHMARK INFORMATION ON SHEET 13.
2. BRIDGE 16 IS TO BE REMOVED IN THE FUTURE AND IS NOT PART OF THE WORK.

PLAN C
SCALE=1:5,000

'SCHEDULE G'

LICENSED PROFESSIONAL ENGINEER
M. D. HERNANDEZ
100078099
Jan 20/23
PROVINCE OF ONTARIO

Conditions of Use

Verify elevations and/or dimensions on drawing prior to use. Report any discrepancies to Dillon Consulting Limited.

Do not scale dimensions from drawing.

Do not modify drawing, re-use it, or use it for purposes other than those intended at the time of its preparation without prior written permission from Dillon Consulting Limited.

No.	ISSUED FOR	DATE	BY
3	FINAL REPORT SUBMISSION	20 JAN 23	MDH
2	PUBLIC INFORMATION CENTRE	25 MAR 22	MDH
1	CLIENT REVIEW	4 MAR 22	MDH

DESIGN	MDH
REVIEWED BY	CDP
DRAWN	KAW/OEM
CHECKED BY	TRO
DATE	January 20, 2023
SCALE	AS SHOWN

DILLON CONSULTING

PROJECT NO 17-6773

DRAWING SCALES BASED ON A 11" X 17" SHEET

Drainage Report for the
GOUIN DRAIN
Town of Tecumseh & City of Windsor

SHEET TITLE PLAN C

PAGE NO. 3 of 21

Jan 20, 2023 – 10:04am G:\pw working directory\projects to 2017\35sem\06116985\76773-03-DRN-CON.dwg

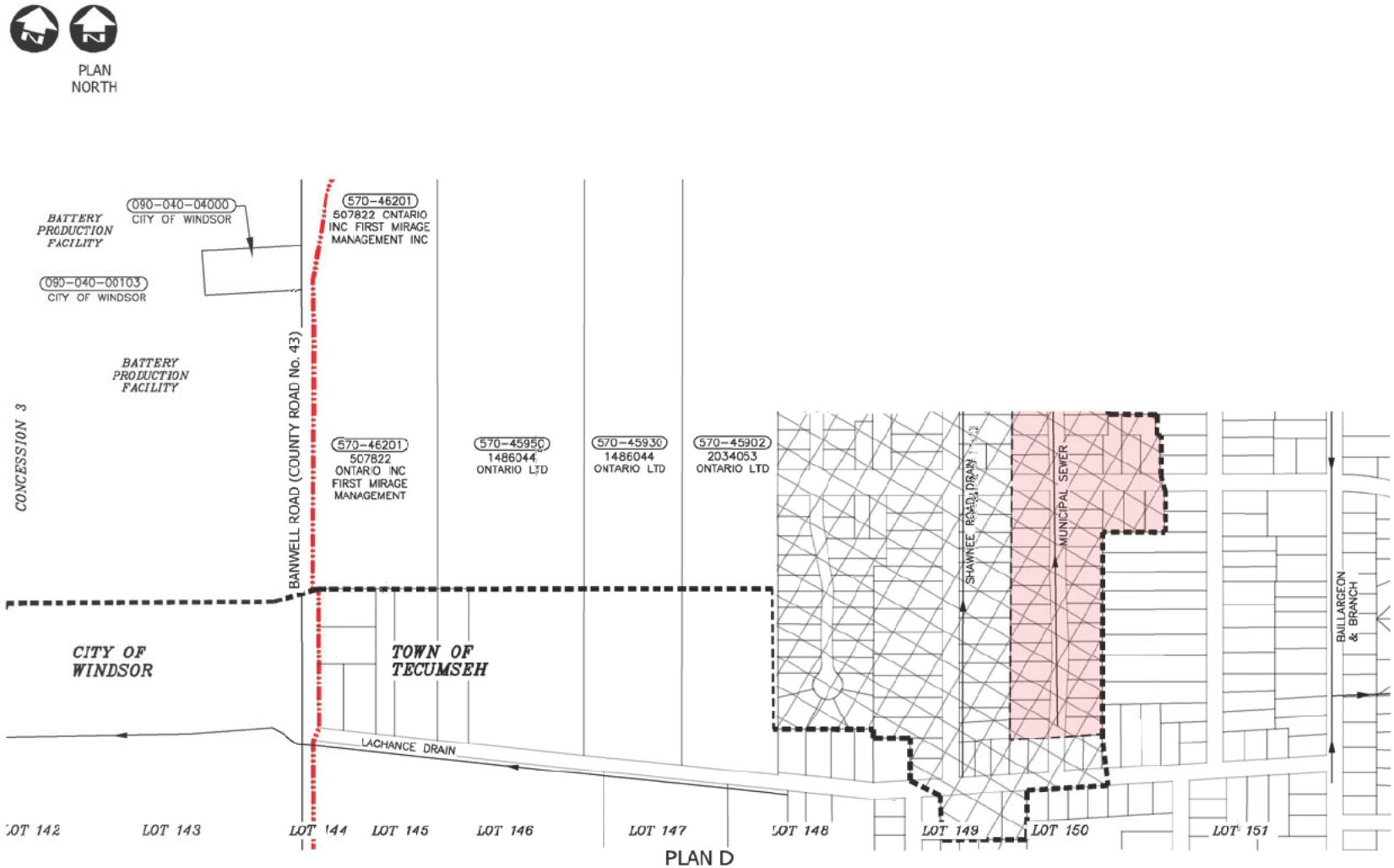

PLAN D
SCALE=1:5,000

LEGEND
- MUNICIPAL BOUNDARY
- GOUIN DRAIN DRAINAGE AREA BOUNDARY
- GOUIN BRANCH DRAIN DRAINAGE AREA BOUNDARY
- GOUIN DRAIN
- OTHER DRAINS
- SUBWATERSHED
- BLOCK 'A' ASSESSMENT
- BLOCK 'B' ASSESSMENT
- BRIDGE REPLACEMENT
- FUTURE BRIDGE REPLACEMENT
- EXISTING BRIDGE
- BRIDGE REMOVAL
- LOCAL BENCHMARK

NOTES:
1. BENCHMARK INFORMATION ON SHEET 13

LICENSED PROFESSIONAL ENGINEER
M. D. HERNANDEZ
100078059
Jan 20/23
PROVINCE OF ONTARIO

Conditions of Use

Verify elevations and/or dimensions on drawing prior to use. Report any discrepancies to Dillon Consulting Limited.

Do not scale dimensions from drawing.

Do not modify drawing, re-use it, or use it for purposes other than those intended at the time of its preparation without prior written permission from Dillon Consulting Limited.

No.	ISSUED FOR	DATE	BY
3	FINAL REPORT SUBMISSION	20 JAN 23	MDH
2	PUBLIC INFORMATION CENTRE	25 MAR 22	MDH
1	CLIENT REVIEW	4 MAR 22	MDH

DESIGN: MDH
REVIEWED BY: CDP
DRAWN: KAW/CEM
CHECKED BY: TRO
DATE: January 20, 2023
SCALE: AS SHOWN

DILLON CONSULTING
PROJECT NO: 17-6773
DRAWING SCALES BASED ON A 11" X 17" SHEET

'SCHEDULE G'

Drainage Report for the
GOUIN DRAIN
Town of Tecumseh & City of Windsor

SHEET TITLE: PLAN D

PAGE NO: 4 of 21

Jan 20, 2023 – 10:04am G:\pw working directory\projects to 2017\35sem\06116585\176773-02-DRN-CON.dwg

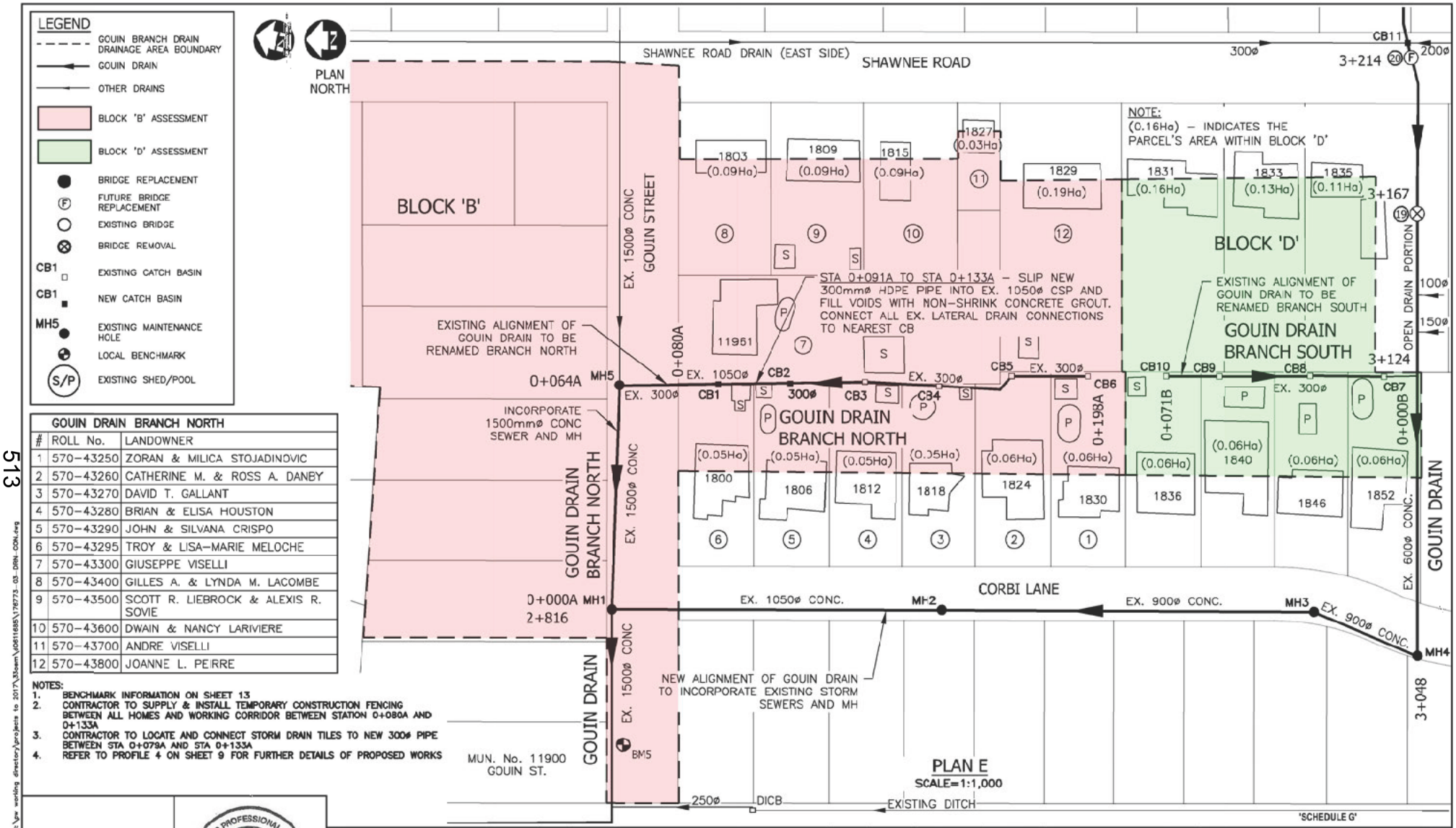

GOUIN DRAIN BRANCH NORTH		
#	ROLL No.	LANDOWNER
1	570-43250	ZORAN & MILICA STOJADINOVIC
2	570-43260	CATHERINE M. & ROSS A. DANBY
3	570-43270	DAVID T. GALLANT
4	570-43280	BRIAN & ELISA HOUSTON
5	570-43290	JOHN & SILVANA CRISPO
6	570-43295	TROY & LISA-MARIE MELOCHE
7	570-43300	GIUSEPPE VISELLI
8	570-43400	GILLES A. & LYNDA M. LACOMBE
9	570-43500	SCOTT R. LIEBROCK & ALEXIS R. SOVIE
10	570-43600	DWAIN & NANCY LARIVIERE
11	570-43700	ANDRE VISELLI
12	570-43800	JOANNE L. PEIRRE

NOTES:

1. BENCHMARK INFORMATION ON SHEET 13
2. CONTRACTOR TO SUPPLY & INSTALL TEMPORARY CONSTRUCTION FENCING BETWEEN ALL HOMES AND WORKING CORRIDOR BETWEEN STATION 0+080A AND 0+133A
3. CONTRACTOR TO LOCATE AND CONNECT STORM DRAIN TILES TO NEW 300ø PIPE BETWEEN STA 0+079A AND STA 0+133A
4. REFER TO PROFILE 4 ON SHEET 9 FOR FURTHER DETAILS OF PROPOSED WORKS

LICENSED PROFESSIONAL ENGINEER
M. D. HERNANDEZ
100078099
Jan 20/23
PROVINCE OF ONTARIO

Conditions of Use

Verify elevations and/or dimensions on drawing prior to use. Report any discrepancies to Dillon Consulting Limited.

Do not scale dimensions from drawing.

Do not modify drawing, re-use it, or use it for purposes other than those intended at the time of its preparation without prior written permission from Dillon Consulting Limited.

No.	ISSUED FOR	DATE	BY
3	FINAL REPORT SUBMISSION	20 JAN 23	MDH
2	PUBLIC INFORMATION CENTRE	25 MAR 22	MDH
1	CLIENT REVIEW	4 MAR 22	MDH

DESIGN: MDH | REVIEWED BY: CDP
DRAWN: OEM | CHECKED BY: TRO
DATE: January 20, 2023
SCALE: AS SHOWN

DILLON CONSULTING
PROJECT NO: 17-6773
DRAWING SCALES BASED ON A 11" X 17" SHEET

Drainage Report for the
GOUIN DRAIN
Town of Tecumseh & City of Windsor

SHEET TITLE: PLAN E

PAGE NO: 5 of 21

Jan 20, 2023 – 10:04am C:\pw_working directory\projects to 2017\33sam\J0611685\176773-03_DRN_CON.dwg

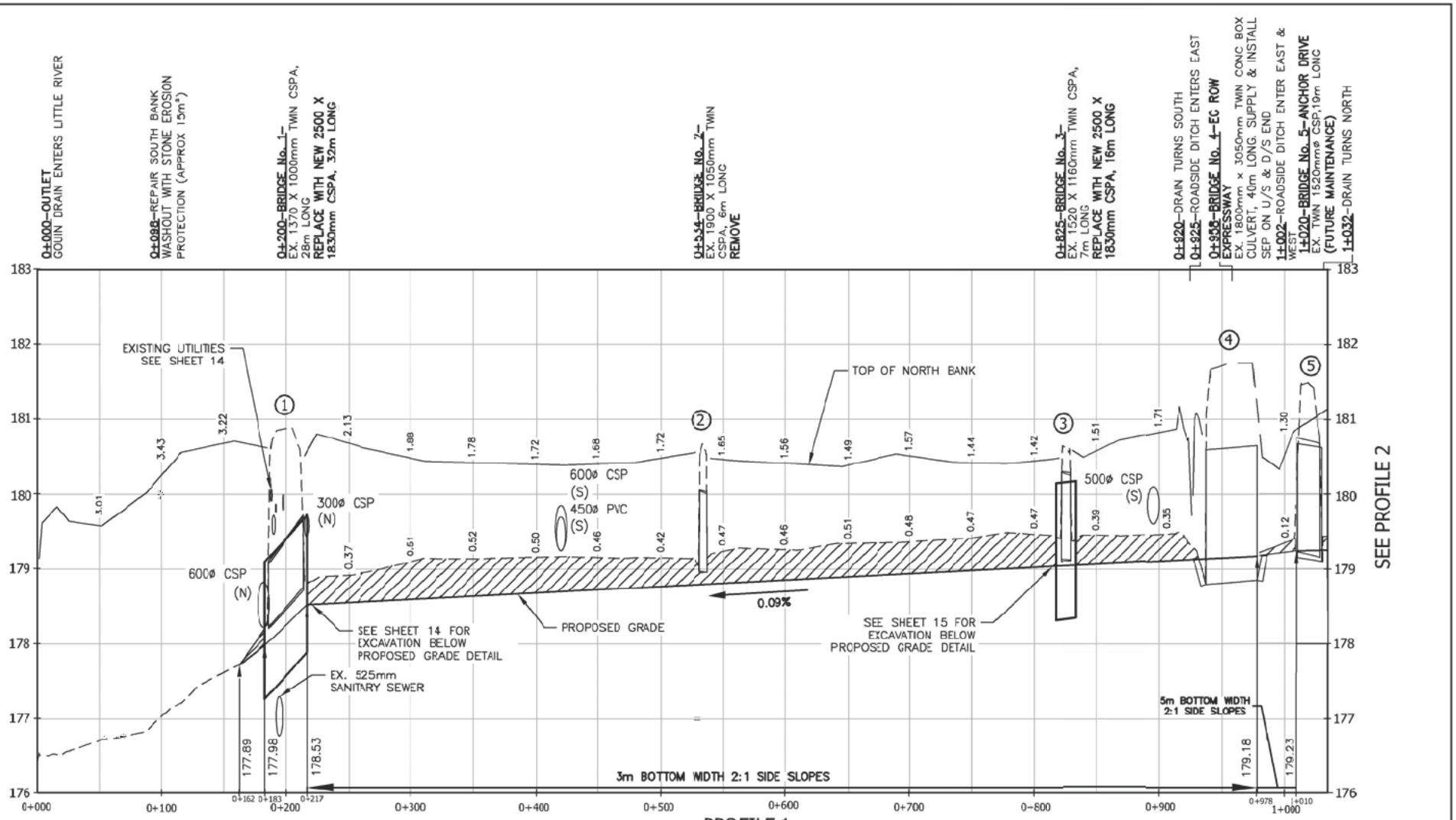

PROFILE 1

SCALE–HORIZ.=1: 3,000
VERT.=1: 100

'SCHEDULE G'

LICENSED PROFESSIONAL ENGINEER
M. D. HERNANDEZ
100078099
Jan 20/23
PROVINCE OF ONTARIO

Conditions of Use

Verify elevations and/or dimensions on drawing prior to use. Report any discrepancies to Dillon Consulting Limited.

Do not scale dimensions from drawing.

Do not modify drawing, re-use it, or use it for purposes other than those intended at the time of its preparation without prior written permission from Dillon Consulting Limited.

No	ISSUED FOR	DATE	BY
3	FINAL REPORT SUBMISSION	20 JAN 23	MDH
2	PUBLIC INFORMATION CENTRE	25 MAR 22	MDH
1	CLIENT REVIEW	4 MAR 22	MDH

DESIGN: MDH	REVIEWED BY: CDP
DRAWN: OEM	CHECKED BY: TRO
DATE: January 20, 2023	
SCALE: AS SHOWN	

DILLON CONSULTING

PROJECT NO: 17-6773

DRAWING SCALES BASED ON A 11" X 17" SHEET

Drainage Report for the
GOUIN DRAIN
Town of Tecumseh & City of Windsor

SHEET TITLE: PROFILE STATION 0+000 TO STATION 1+010

PAGE NO: 6 of 21

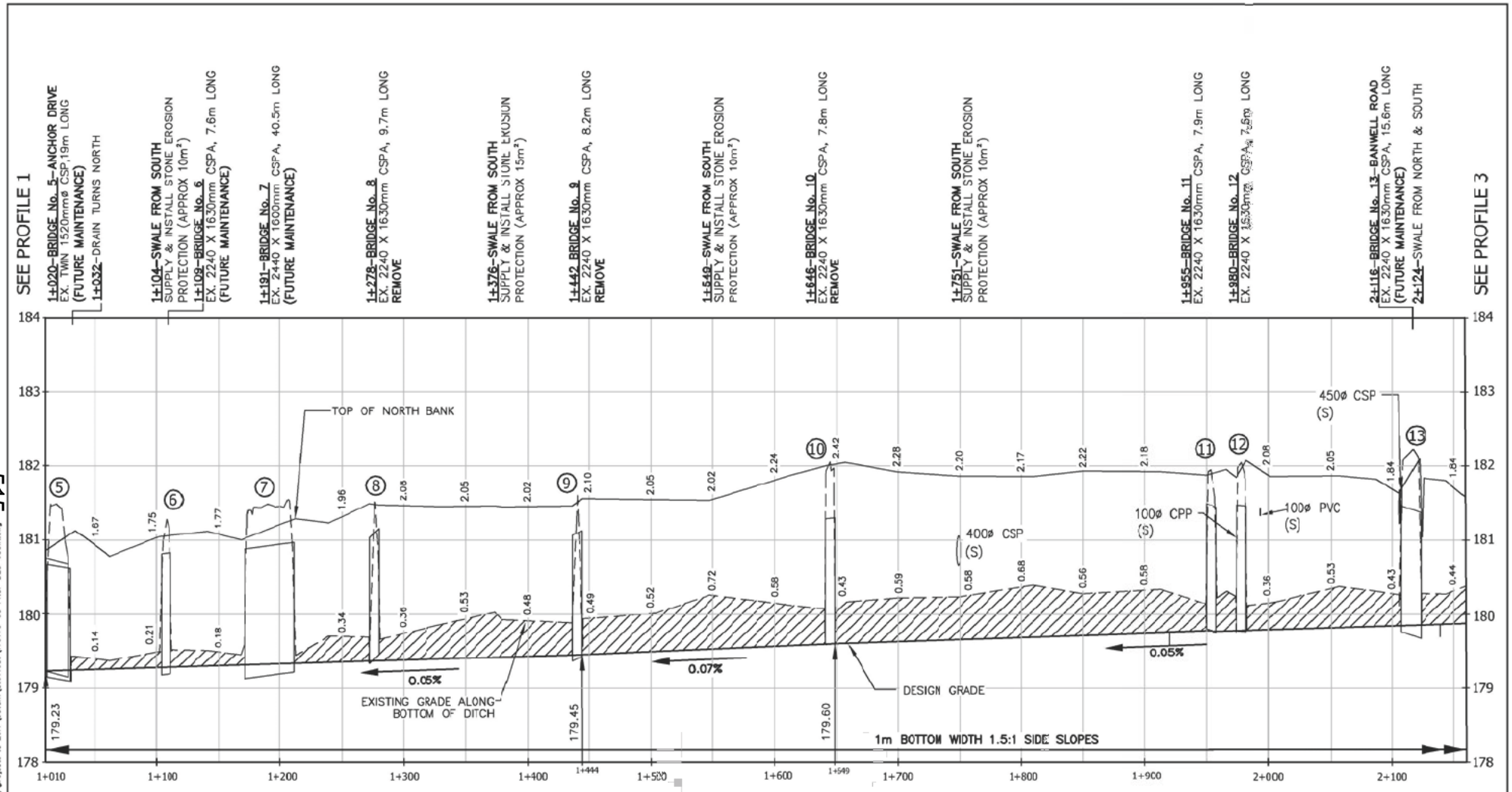

PROFILE 2

SCALE-HORIZ.=1:3,000
VERT.=1:100

'SCHEDULE G'

LICENSED PROFESSIONAL ENGINEER
M. D. HERNANDEZ
100078099
Jan 20/23
PROVINCE OF ONTARIO

Conditions of Use

Verify elevations and/or dimensions on drawing prior to use. Report any discrepancies o Dillon Consulting Limited.

Do not scale dimensions fom drawing.

Do not modify drawing, re-use it, or use it for purposes other than those intended at thetime of its preparation without prior written permission from Dilon Consulting Limited.

No	ISSUED FOR	DATE	BY
3	FINAL REPORT SUBMISSION	18 JAN 23	MDH
2	PUBLIC INFORMATION CENTRE	25 MAR 22	MDH
1	CLIENT REVIEW	4 MAR 22	MDH

DESIGN	MDH
REVIEWED BY	CDP
DRAWN	KAW/CEM
CHECKED BY	TRO
DATE	January 18, 2022
SCALE	AS SHOWN

DILLON CONSULTING

PROJECT NO 17-6773

DRAWING SCALES BASED ON A 11" X 17" SHEET

Drainage Report for the
GOUIN DRAIN
Town of Tecumseh & City of Windsor

SHEET TITLE
PROFILE STATION 1+010 TO STATION 2+160

PAGE NO. 7 of 21

Jan 20, 2023 – 10:05am C:\pw working directory\projects to 2017\33sem\d061168\\76773-03-PROF-DES-GOUIN.dwg

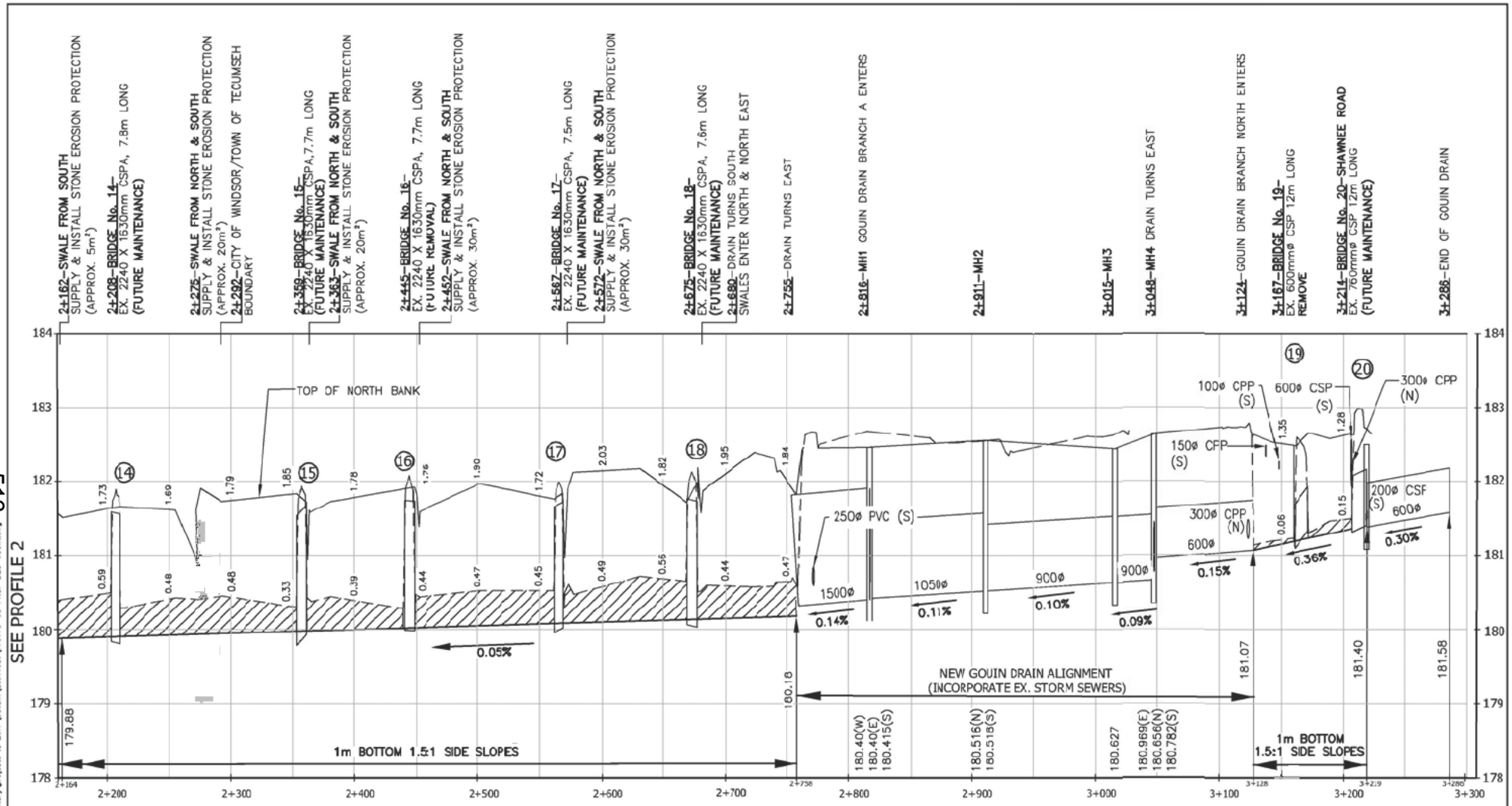

PROFILE 3

SCALE-HORIZ.=1:3,000
VERT.=1:100

'SCHEDULE G'

LICENSED PROFESSIONAL ENGINEER
M. D. HERNANDEZ
100078039
Jan 20/23
PROVINCE OF ONTARIO

Conditions of Use

Verify elevations and/or dimensions on drawing prior to use. Report any discrepancies to Dillon Consulting Limited.

Do not scale dimensions from drawing.

Do not modify drawing, re-use it, or use it for purposes other than those intended at the time of its preparation without prior written permission from Dillon Consulting Limited.

No	ISSUED FOR	DATE	BY
3	FINAL REPORT SUBMISSION	18 JAN 23	MDH
2	PUBLIC INFORMATION CENTRE	25 MAR 22	MDH
1	CLIENT REVIEW	4 MAR 22	MDH

DESIGN	MDH
REVIEWED BY	CDP
DRAWN	KAW/CEM
CHECKED BY	TRO
DATE	January 18, 2022
SCALE	AS SHOWN

DILLON CONSULTING

PROJECT NO 17-6773

DRAWING SCALES BASED ON A 11" X 17" SHEET

Drainage Report for the
GOUIN DRAIN
Town of Tecumseh & City of Windsor

SHEET TITLE
PROFILE STATION 2+160 TO STATION 3+286

PAGE NO. 8 of 21

Jan 20, 2023 – 10:06am C:\pw working directory\projects to 2017\33sem\d061168\\76773-03-PROF-DES-GOUIN.dwg

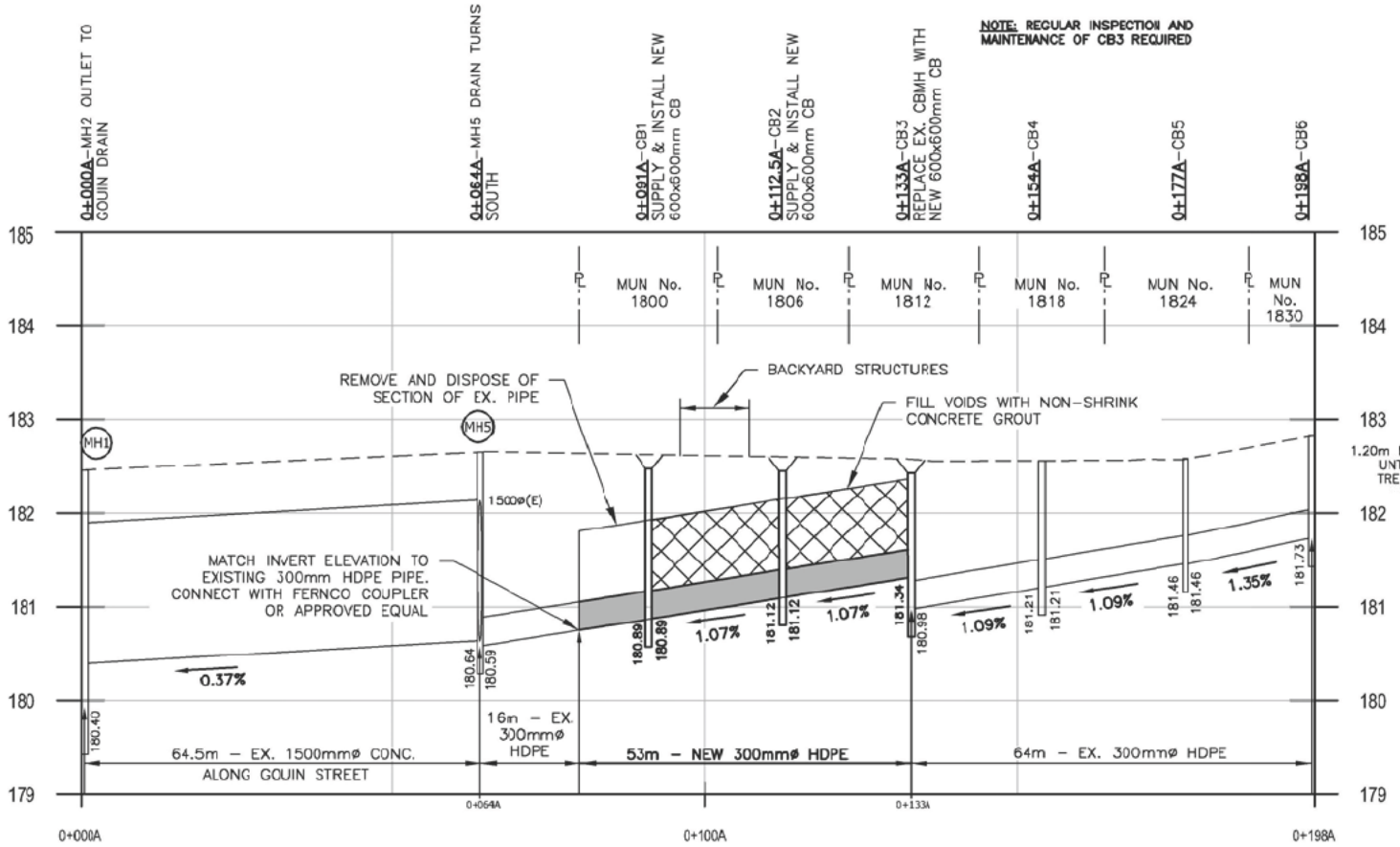

PROFILE 4 - GOUIN DRAIN BRANCH NORTH

SCALE-HORIZ.=1:750
VERT.=1:50

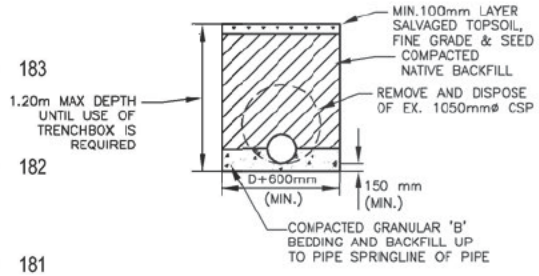

GOUIN DRAIN BRANCH NORTH REPLACEMENT DETAIL

SCALE – NTS

TABLE 1 - CATCH BASIN DETAILS

CATCH BASIN No.	SIZE (mm)	STATION	TOP ELEVATION (m)	INVERT ELEVATION (m) INLETS	INVERT ELEVATION (m) OUTLETS
CB1	600x600	0+091A	182.48	S. INV 180.89 (300ø)	N. INV 180.89 (300ø)
CB2	600x600	0+112.5A	182.45	S. INV 180.12 (300ø)	N. INV 180.12 (300ø)
CB3	600x600	0+133A	182.43	S. INV 180.98 (300ø)	N. INV 181.34 (300ø)

NOTE: TOP ELEVATION OF CATCH BASINS ARE TO BE APPROXIMATELY 0.15m BELOW EXISTING GRADE

'SCHEDULE G'

LICENSED PROFESSIONAL ENGINEER
M. D. HERNANDEZ
100078099
Jan 20/23
PROVINCE OF ONTARIO

Conditions of Use

Verify elevations and/or dimensions on drawing prior to use. Report any discrepancies to Dillon Consulting Limited.

Do not scale dimensions from drawing.

Do not modify drawing, re-use it, or use it for purposes other than those intended at the time of its preparation without prior written permission from Dillon Consulting Limited.

No.	ISSUED FOR	DATE	BY
3	FINAL REPORT SUBMISSION	18 JAN 23	MDH
2	PUBLIC INFORMATION CENTRE	28 MAR 22	MDH
1	CLIENT REVIEW	8 MAR 22	MDH

DESIGN: MDH | REVIEWED BY: CDP
DRAWN: OEM | CHECKED BY: TRO
DATE: January 18, 2022
SCALE: AS SHOWN

DILLON CONSULTING
PROJECT NO: 17-6773
DRAWING SCALES BASED ON A 11" X 17" SHEET

Drainage Report for the
GOUIN DRAIN
Town of Tecumseh & City of Windsor

SHEET TITLE: PROFILE GOUIN DRAIN BRANCH NORTH

PAGE NO: 9 of 21

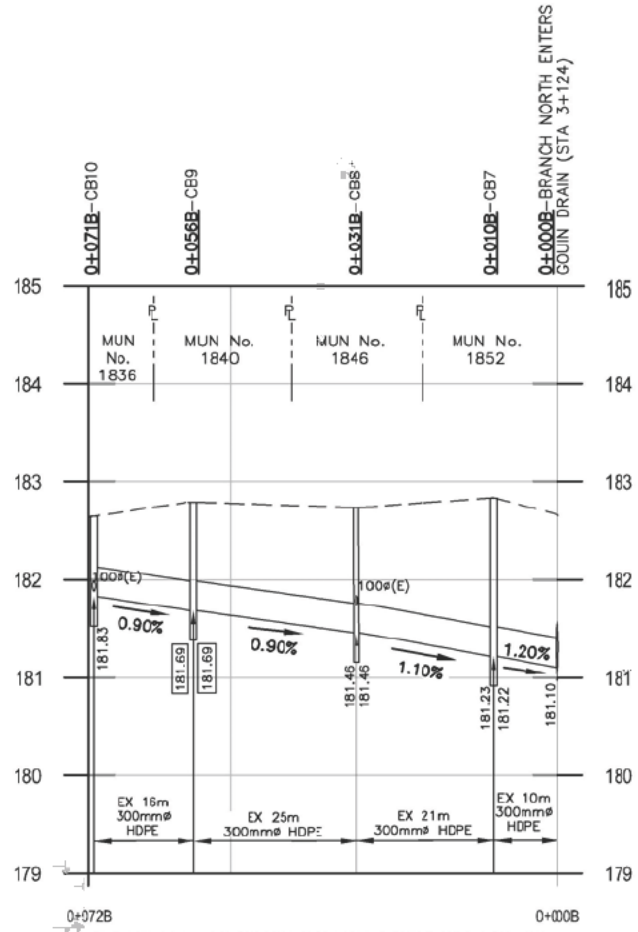

181.69 – TEXT BOX INDICATES ELEVATION IS ASSUMED AND NOT SURVEYED

PROFILE 5 - GOUIN DRAIN BRANCH SOUTH

SCALE-HORIZ.=1:750
VERT.=1:50

'SCHEDULE G'

LICENSED PROFESSIONAL ENGINEER
M. D. HERNANDEZ
100078039
Jan 20/23
PROVINCE OF ONTARIO

Conditions of Use

Verify elevations and/or dimensions on drawing prior to use. Report any discrepancies to Dillon Consulting Limited.

Do not scale dimensions from drawing.

Do not modify drawing, re-use it, or use it for purposes other than those intended at the time of its preparation without prior written permission from Dillon Consulting Limited.

No.	ISSUED FOR	DATE	BY
3	FINAL REPORT SUBMISSION	18 JAN 23	MDH
2	PUBLIC INFORMATION CENTRE	25 MAR 22	MDH
1	CLIENT REVIEW	4 MAR 22	MDH

DESIGN MDH	REVIEWED BY CDP
DRAWN OEM	CHECKED BY TRO
DATE January 18, 2022	
SCALE AS SHOWN	

DILLON CONSULTING

PROJECT NO 17-6773

DRAWING SCALES BASED ON A 11" X 17" SHEET

Drainage Report for the
GOUIN DRAIN
Town of Tecumseh & City of Windsor

SHEET TITLE
PROFILE GOUIN DRAIN BRANCH SOUTH & BRANCH DRAIN DETAILS

PAGE NO. 10 of 21

Jan 20, 2023 – 10:06am C:\pw working directory\projects to 2017\33cam\d0411685\176773-03-PROF-DES-GOUIN.dwg

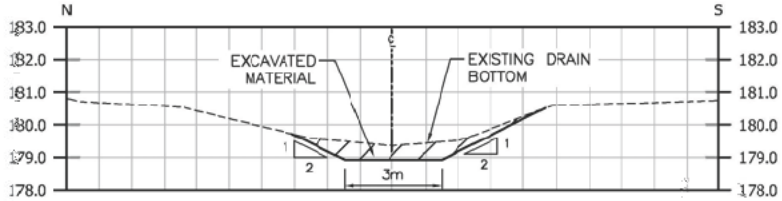

CROSS-SECTION 0+690 (LOOKING UPSTREAM)
SCALE–1:150

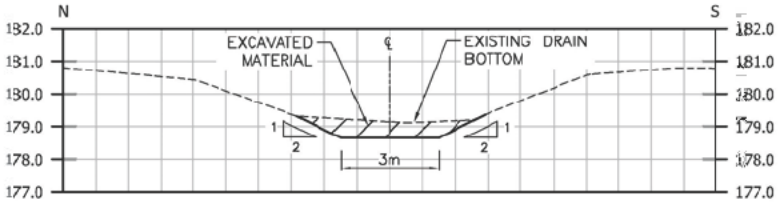

CROSS-SECTION 0+365 (LOOKING UPSTREAM)
SCALE–1:150

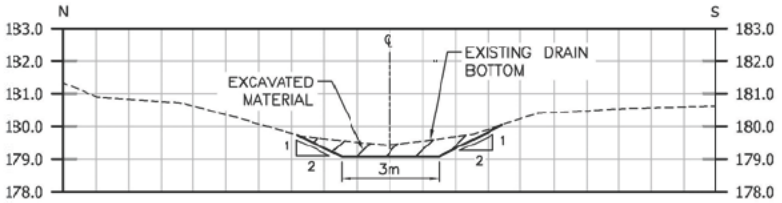

CROSS-SECTION 0+867 (LOOKING UPSTREAM)
SCALE–1:150

'SCHEDULE G'

LICENSED PROFESSIONAL ENGINEER
M. D. HERNANDEZ
100078059
Jan 20/23
PROVINCE OF ONTARIO

Conditions of Use

Verify elevations and/or dimensions on drawing prior to use. Report any discrepancies to Dillon Consulting Limited.

Do not scale dimensions from drawing.

Do not modify drawing, re-use it, or use it for purposes other than those intended at the time of its preparation without prior written permission from Dillon Consulting Limited.

No	ISSUED FOR	DATE	BY
3	FINAL REPORT SUBMISSION	20 JAN 23	MDH
2	PUBLIC INFORMATION CENTRE	25 MAR 22	MDH
1	CLIENT REVIEW	4 MAR 22	MDH

DESIGN: MDH
REVIEWED BY: CDP
DRAWN: OEM
CHECKED BY: TRO
DATE: January 20, 2023
SCALE: AS SHOWN

DILLON CONSULTING

PROJECT NO: 17-6773
DRAWING SCALES BASED ON A 11" X 17" SHEET

Drainage Report for the
GOUIN DRAIN
Town of Tecumseh & City of Windsor

SHEET TITLE: CROSS SECTIONS STATION 0+000 TO STATION 1+010

PAGE NO: 11 of 21

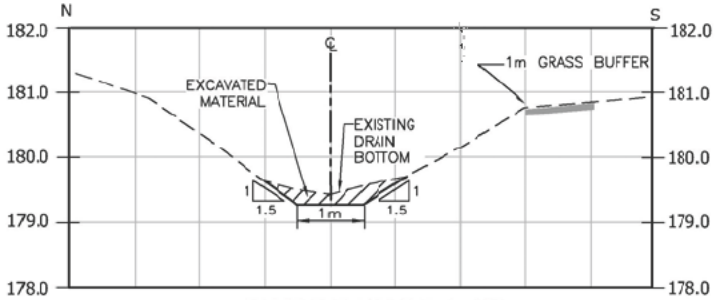

CROSS SECTION STA. 1+080
SCALE–1: 75

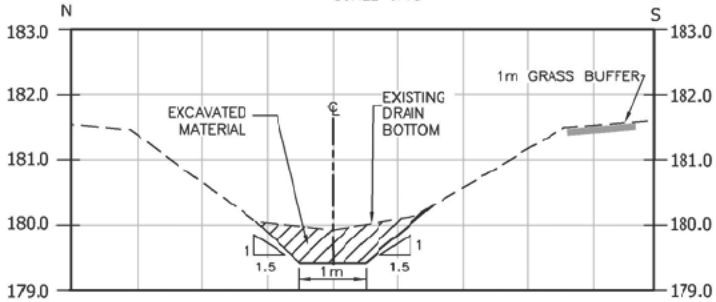

CROSS SECTION STA. 1+380
SCALE–1: 75

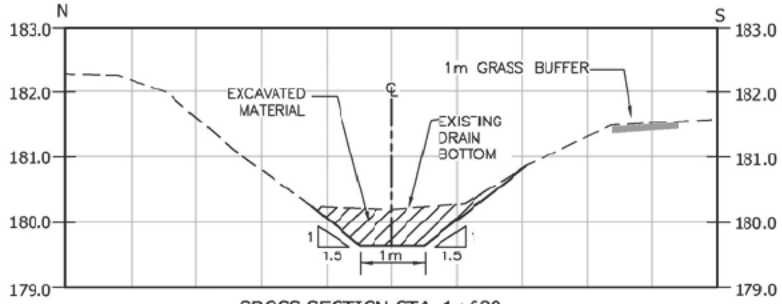

CROSS SECTION STA. 1+680
SCALE–1: 75

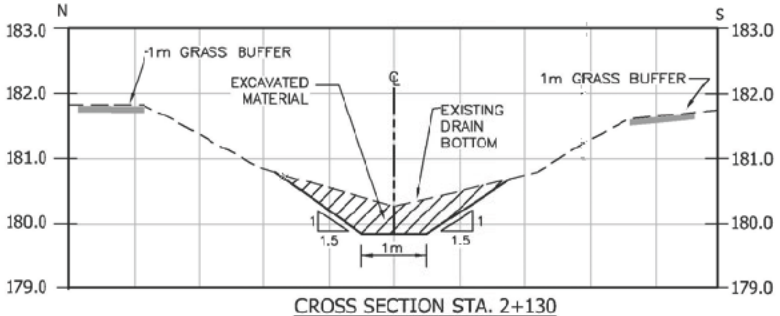

CROSS SECTION STA. 2+130
SCALE–1: 75

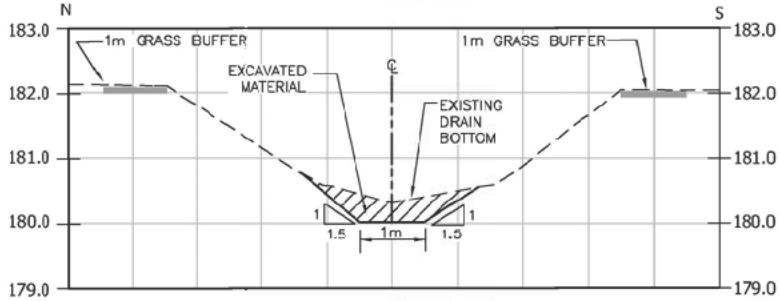

CROSS SECTION STA. 2+430
SCALE–1: 75

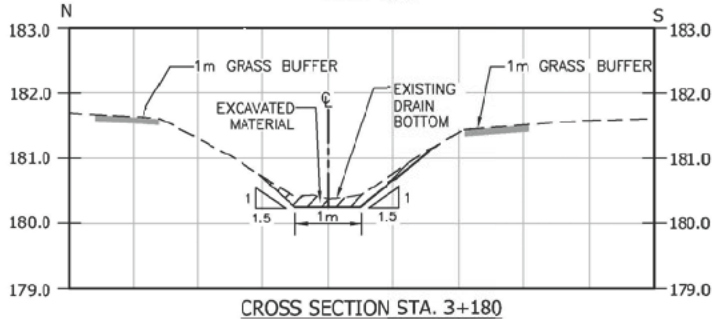

CROSS SECTION STA. 3+180
SCALE–1: 75

LICENSED PROFESSIONAL ENGINEER
M. D. HERNANDEZ
100078099
Jan 20/23
PROVINCE OF ONTARIO

Conditions of Use

Verify elevations and/or dimensions on drawing prior to use. Report any discrepancies to Dillon Consulting Limited.

Do not scale dimensions from drawing.

Do not modify drawing, re-use it, or use it for purposes other than those intended at the time of its preparation without prior written permission from Dillon Consulting Limited.

No.	ISSUED FOR	DATE	BY
3	FINAL REPORT SUBMISSION	18 JAN 23	MDH
2	PUBLIC INFORMATION CENTRE	25 MAR 22	MDH
1	CLIENT REVIEW	4 MAR 22	MDH

DESIGN: MDH
REVIEWED BY: CDP
DRAWN: KAW/CEM
CHECKED BY: TRO
DATE: January 18, 2022
SCALE: AS SHOWN

DILLON CONSULTING
PROJECT NO: 17-6773
DRAWING SCALES BASED ON A 11" X 17" SHEET

'SCHEDULE G'

Drainage Report for the
GOUIN DRAIN
Town of Tecumseh & City of Windsor

SHEET TITLE: CROSS SECTIONS STATION 1+010 TO STATION 3+286

PAGE NO. 12 of 21

TABLE 2 - ACCESS BRIDGE DESIGN INFORMATION	BRIDGE REPLACEMENTS		FUTURE BRIDGE REPLACEMENTS								
DESCRIPTION	BRIDGE No. 1	BRIDGE No. 3	BRIDGE No. 5	BRIDGE No. 6	BRIDGE No. 7	BRIDGE No. 13	BRIDGE No. 14	BRIDGE No. 15	BRIDGE No. 17	BRIDGE No. 18	BRIDGE No. 20
BRIDGE ℄ LOCATION (STA.)	0+200	0+825	1+020	1+109	1+191	2+116	2+208	2+359	2+567	2+675	3+214
BRIDGE TYPE	UTILITY	UTILITY	ROAD	FARM	DRIVEWAY	ROAD	FARM	FARM	FARM	FARM	ROAD
PIPE INVERT ELEV. U/S SIDE(m)	177.89	178.35	179.06	179.12	179.16	179.69	179.72	179.74	179.91	179.97	181.38
PIPE INVERT ELEV. D/S SIDE(m)	177.28	178.33	179.04	179.11	179.11	179.67	179.70	179.73	179.90	179.95	181.31
TOP OF ℄ DRIVEWAY SURFACE ELEV. (m)	180.88	180.64	181.57	181.28	181.49	182.23	181.90	181.94	182.01	182.13	182.99
DRAIN BOTTOM (m) (DESIGN) (AT CENTRELINE OF CULVERT)	178.25	179.05	179.25	179.29	179.33	179.86	179.90	179.98	180.08	180.14	181.34
MIN. TOP WIDTH OF DRIVEWAY (m)	24.0	7.3	8.5	7.3	22.0	12.0	7.3	7.3	7.3	7.3	6.0
MIN. CULVERT GRADE (%)	1.90%	0.10%	0.10%	0.10%	0.10%	0.10%	0.10%	0.10%	0.10%	0.10%	0.10%
CULVERT TYPE	CSPA	CSPA	65-D	CSPA	CSPA	CSPA	CSPA	CSPA	CSPA	CSPA	CSP
CULVERT MATERIAL	ALUM.	ALUM.	CONCRETE	ALUM.	ALUM.	POLY-LAM.	ALUM.	ALUM.	ALUM.	ALUM.	POLY-LAM.
CULVERT LENGTH (m)	32	16	18	14	41	18	16	16	16	16	12
CULVERT THICKNESS (mm)	3.5	3.5	–	3.5	3.5	3.5	3.5	3.5	3.5	3.5	2.8
CULVERT CORRUGATIONS (mm)	125x25	125x25	–	125X25	125X25	125x25	125x25	125x25	125x25	125x25	68x13
PIPE SIZE (mm)	2500x1830	2500x1830	TWIN 1500	2230x1700	2230x1700	2500x1830	2230X1700	2230X1700	2230X1700	2230X1700	750
CULVERT ENDWALL TYPE	SLOPING	SLOPING	BLOCK	SLOPING	SLOPING	BLOCK	SLOPING	SLOPING	SLOPING	SLOPING	SLOPING
TOP OF BLOCK WALL ELEV. (m)	–	–	181.30	–	–	182.00	–	–	–	–	–
NUMBER OF BLOCK ROWS HIGH	–	–	4	–	–	4	–	–	–	–	–

SITE BENCHMARKS
BM1 – TOP OF NUT OF FIRE HYDRANT LOCATED SOUTH OF LAUZON ROAD CUL-DE-SAC AT APPROX. STA. 0+196. ELEVATION=181.34m
BM2 – SOUTH EAST CORNER OF CONCRETE PAD OF ELECTRICAL SWITCHING UNIT AT APPROX. STA. 0+817. ELEVATION=180.87m
BM3 – TOP OF SOUTH END OF CONCRETE BOX CULVERT UNDER EC ROW EXPRESSWAY AT APPROX. STA. 0+980. ELEVATION=181.18m
BM4 – RIM ELEVATION OF MAINTENANCE HOLE LOCATED EAST OF BANWELL ROAD & SOUTH OF DRAIN AT APPROX. STA. 2+131. ELEVATION=182.88m
BM5 – PKNAIL IN TOP OF CONCRETE CURB ON NORTH SIDE OF GOUIN STREET ON THE PRODUCTION SOUTHERLY OF THE EAST SIDE OF DWELLING LOCATED AT MUN. NO. 11900 GOUIN STREET ELEVATION=182.50m

NOTE: CONTRACTOR TO VERIFY BENCHMARKS PRIOR TO CONSTRUCTION.

CONTRACTOR IS RESPONSIBLE FOR ARRANGING UTILITY LOCATES PRIOR TO CONSTRUCTION

LICENSED PROFESSIONAL ENGINEER
M. D. HERNANDEZ
100078099
Jan 20/23
PROVINCE OF ONTARIO

Conditions of Use

Verify elevations and/or dimensions on drawing prior to use. Report any discrepancies to Dillon Consulting Limited.

Do not scale dimensions from drawing.

Do not modify drawing, re-use it, or use it for purposes other than those intended at the time of its preparation without prior written permission from Dillon Consulting Limited.

No.	ISSUED FOR	DATE	BY
3	FINAL REPORT SUBMISSION	18 JAN 23	MDH
2	PUBLIC INFORMATION CENTRE	25 MAR 22	MDH
1	CLIENT REVIEW	4 MAR 22	MDH

DESIGN: MDH | REVIEWED BY: CDP
DRAWN: KAW/OEM | CHECKED BY: TRO
DATE: January 18, 2022
SCALE: AS SHOWN

DILLON CONSULTING
PROJECT NO: 17-6773
DRAWING SCALES BASED ON A 11" X 17" SHEET

Drainage Report for the
GOUIN DRAIN
Town of Tecumseh & City of Windsor

SHEET TITLE: BRIDGE DESIGN INFORMATION

PAGE NO: 13 of 21

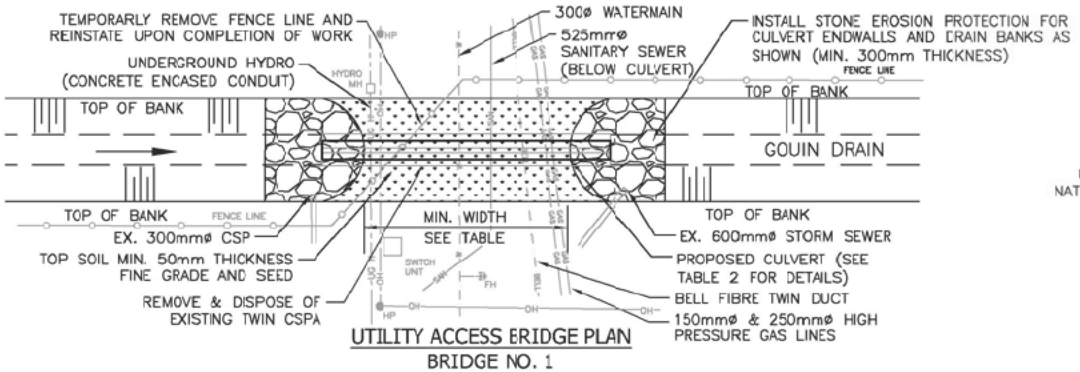

UTILITY ACCESS BRIDGE PLAN
BRIDGE NO. 1
NOT TO SCALE

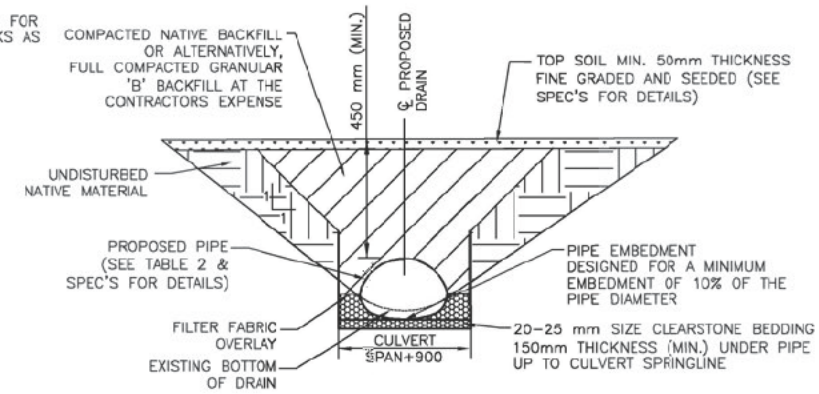

UTILITY ACCESS BRIDGE CROSS SECTION
BRIDGE NO. 1
NOT TO SCALE

NOTE:
- LOCATION OF UTILITIES IS APPROXIMATE. CONTRACTOR MUST ACQUIRE UTILITY LOCATES PRIOR TO WORK AND NOTIFY RESPECTIVE UTILITY COMPANY. CONTRACTOR IS RESPONSIBLE FOR PROTECTING ALL UTILITIES TO THE SATISFACTION OF THE RESPECTIVE UTILITY OWNER FOR THE DURATION OF CONSTRUCTION.
- UTILITY SUPPORT PLAN FOR THE CONCRETE ENCASED HYDRO CONDUIT REQUIRED TO BE SEALED BY A PROFESSIONAL ENGINEER LICENSED IN THE PROVINCE OF ONTARIO

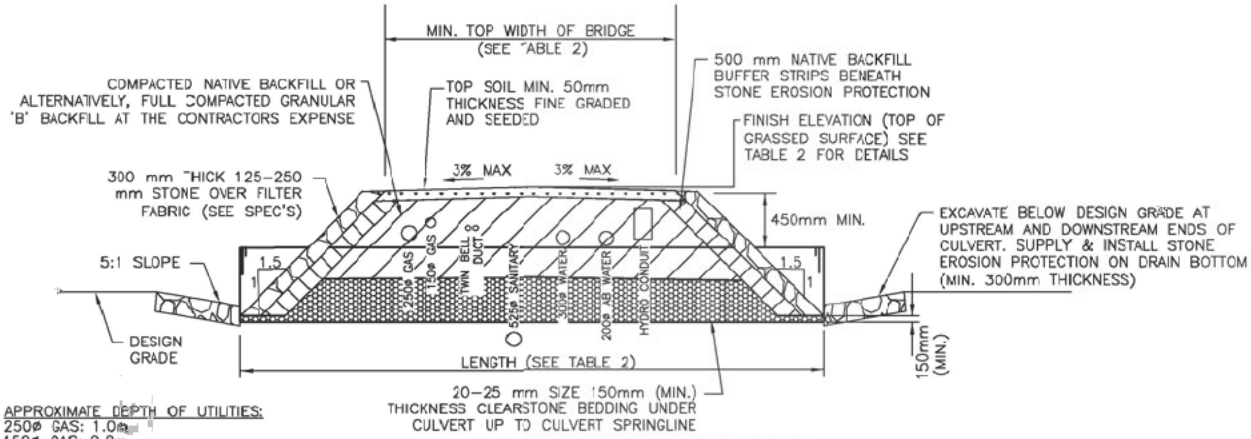

APPROXIMATE DEPTH OF UTILITIES:
250ø GAS: 1.0m
150ø GAS: 0.8m
TWIN BELL DUCT: 0.9m
525ø SANITARY: 3.5m
300ø WATER: 1.0m
0.6mWx0.8mH HYDRO CONDUIT: UNKNOWN
200ø ABANDONED WATER: UNKNOWN

UTILITY ACCESS BRIDGE LONGITUDINAL SECTION
BRIDGE NO. 1
NOT TO SCALE

LICENSED PROFESSIONAL ENGINEER
M. D. HERNANDEZ
100078099
Jan 20/23
PROVINCE OF ONTARIO

Conditions of Use

Verify elevations and/or dimensions on drawing prior to use. Report any discrepancies to Dillon Consulting Limited.

Do not scale dimensions from drawing.

Do not modify drawing, re-use it, or use it for purposes other than those intended at the time of its preparation without prior written permission from Dillon Consulting Limited.

No	ISSUED FOR	DATE	BY
3	FINAL REPORT SUBMISSION	18 JAN 23	MDH
2	PUBLIC INFORMATION CENTRE	25 MAR 22	MDH
1	CLIENT REVIEW	4 MAR 22	MDH

DESIGN MDH	REVIEWED BY CDP
DRAWN OEM	CHECKED BY TRO
DATE January 18, 2022	
SCALE AS SHOWN	

DILLON CONSULTING
PROJECT NO 17-6773
DRAWING SCALES BASED ON A 11" X 17" SHEET

'SCHEDULE G'

Drainage Report for the
GOUIN DRAIN
Town of Tecumseh & City of Windsor

SHEET TITLE
BRIDGE No. 1 REPLACEMENT

PAGE NO. 14 of 21

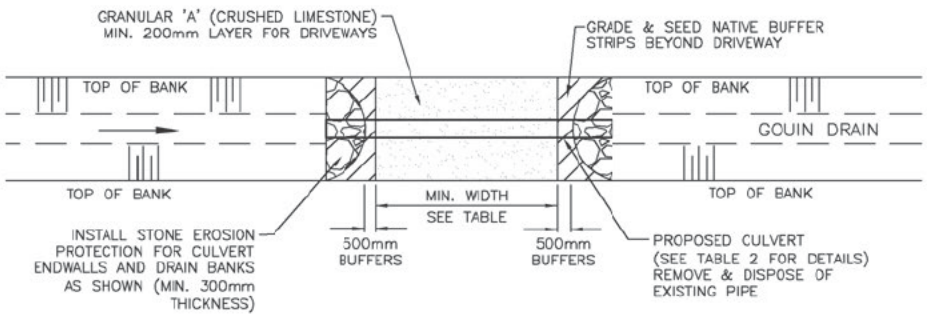

FARM ACCESS BRIDGE PLAN
BRIDGE NO. 3
NOT TO SCALE

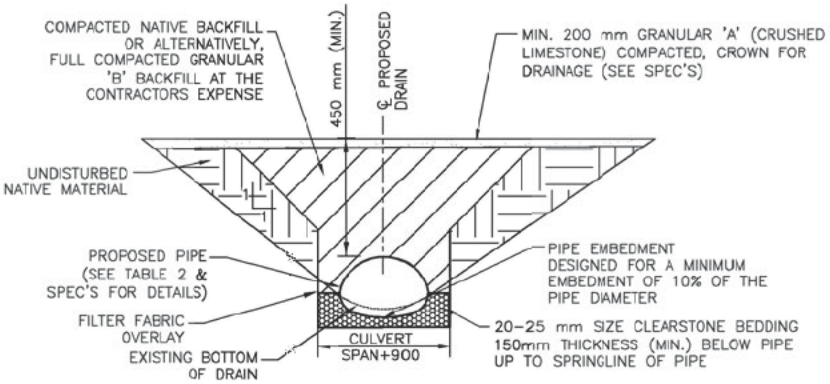

FARM ACCESS BRIDGE CROSS SECTION
BRIDGE NO. 3
NOT TO SCALE

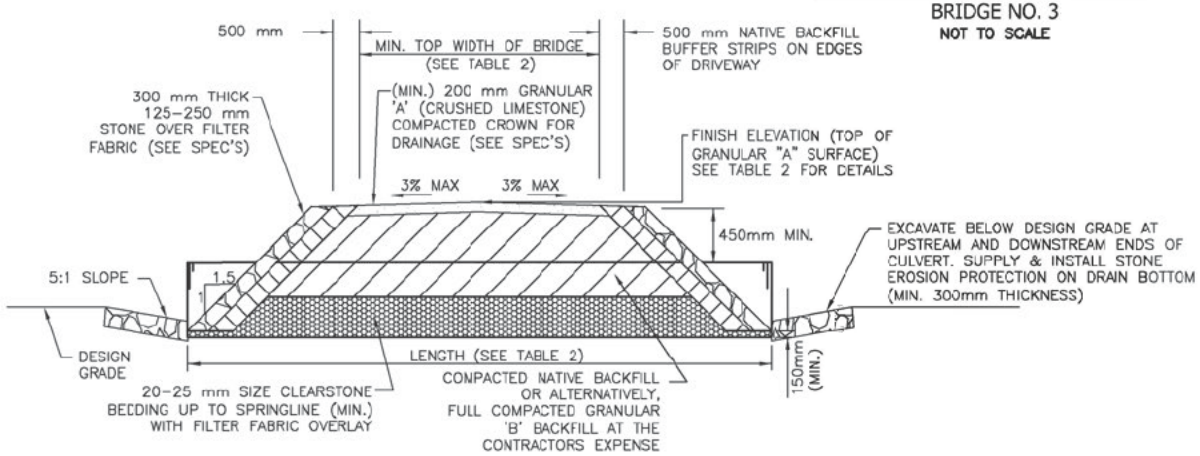

FARM ACCESS BRIDGE LONGITUDINAL SECTION
BRIDGE NO. 3
NOT TO SCALE

LICENSED PROFESSIONAL ENGINEER
M. D. HERNANDEZ
100078099
Jan 20/23
PROVINCE OF ONTARIO

Conditions of Use

Verify elevations and/or dimensions on drawing prior to use. Report any discrepancies to Dillon Consulting Limited.

Do not scale dimensions from drawing.

Do not modify drawing, re-use it, or use it for purposes other than those intended at the time of its preparation without prior written permission from Dillon Consulting Limited.

No.	ISSUED FOR	DATE	BY
3	FINAL REPORT SUBMISSION	18 JAN 23	MDH
2	PUBLIC INFORMATION CENTRE	25 MAR 22	MDH
1	CLIENT REVIEW	4 MAR 22	MDH

DESIGN: MDH	REVIEWED BY: CDP
DRAWN: OEM	CHECKED BY: TRO
DATE: January 18, 2022	
SCALE: AS SHOWN	

DILLON CONSULTING

PROJECT NO: 17-6773

DRAWING SCALES BASED ON A 11" X 17" SHEET

'SCHEDULE G'

Drainage Report for the
GOUIN DRAIN
Town of Tecumseh & City of Windsor

SHEET TITLE: BRIDGE No. 3 REPLACEMENT

PAGE NO: 15 of 21

Jan 20, 2023 – 10:08am C:\pw working directory\projects to 2017\33oem\d0411685\176773-03-PROF-DES-GOUIN.dwg

NOTES:
- BLOCK END WALLS TO BE DESIGNED AND SEALED BY A PROFESSIONAL ENGINEER LICENSED IN THE PROVINCE OF ONTARIO
- SUPPLY & INSTALL OBJECT MARKER SIGNS WA-33L/R AS PER THE ONTARIO TRAFFIC MANUAL

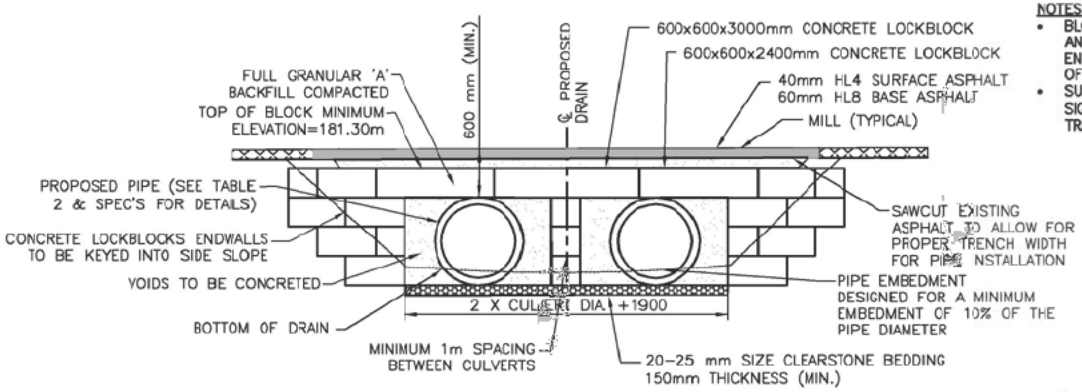

ROAD BRIDGE CROSS SECTION
BRIDGE NO. 5
NOT TO SCALE

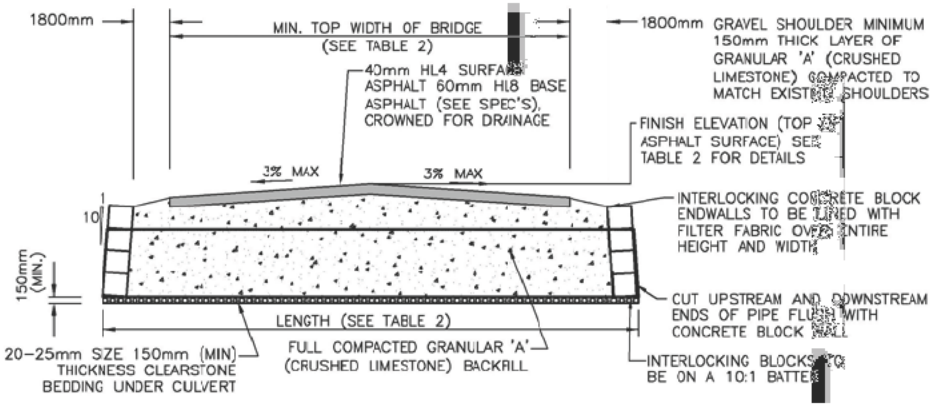

ROAD BRIDGE LONGITUDINAL SECTION
BRIDGE NO. 5
NOT TO SCALE

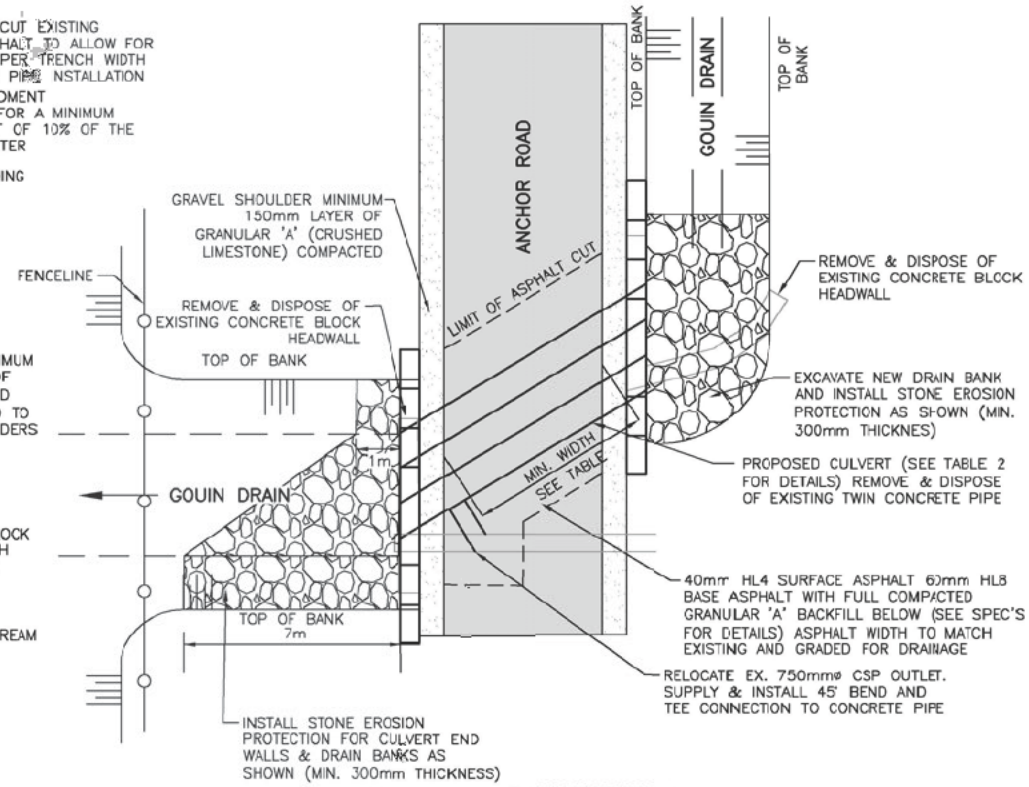

ROAD BRIDGE PLAN
BRIDGE NO. 5
NOT TO SCALE

LICENSED PROFESSIONAL ENGINEER
M. D. HERNANDEZ
100078059
Jan 20/23
PROVINCE OF ONTARIO

Conditions of Use

Verify elevations and/or dimensions on drawing prior to use. Report any discrepancies to Dillon Consulting Limited.

Do not scale dimensions from drawing.

Do not modify drawing, re-use it, or use it for purposes other than those intended at the time of its preparation without prior written permission from Dillon Consulting Limited.

No.	ISSUED FOR	DATE	BY
3	FINAL REPORT SUBMISSION	18 JAN 23	MDH
2	PUBLIC INFORMATION CENTRE	25 MAR 22	MDH
1	CLIENT REVIEW	4 MAR 22	MDH

DESIGN	MDH
REVIEWED BY	CDP
DRAWN	OEM
CHECKED BY	TRO
DATE	January 18, 2022
SCALE	AS SHOWN

DILLON CONSULTING

PROJECT NO 17-6773

DRAWING SCALES BASED ON A 11" X 17" SHEET

Drainage Report for the
GOUIN DRAIN
Town of Tecumseh & City of Windsor

SHEET TITLE
FUTURE BRIDGE No. 5 REPLACEMENT

PAGE NO. 16 of 21

Jan 20, 2023 – 10:08am C:\pw working directory\projects to 2027\352\mn\u0611589\176773-03-PROF-DES-001%.dwg

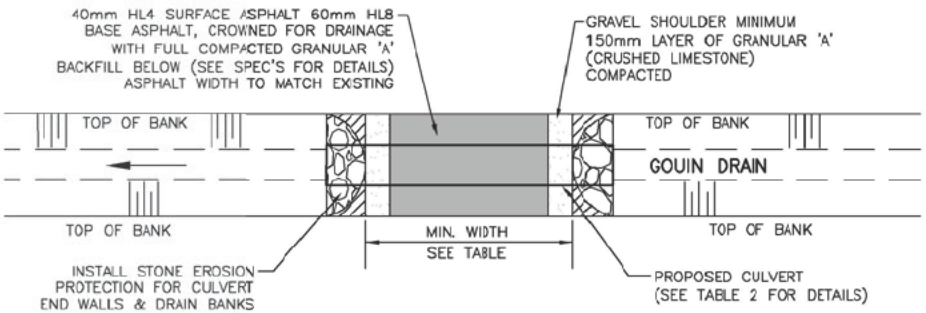

ROAD BRIDGE PLAN
BRIDGE NO. 7
NOT TO SCALE

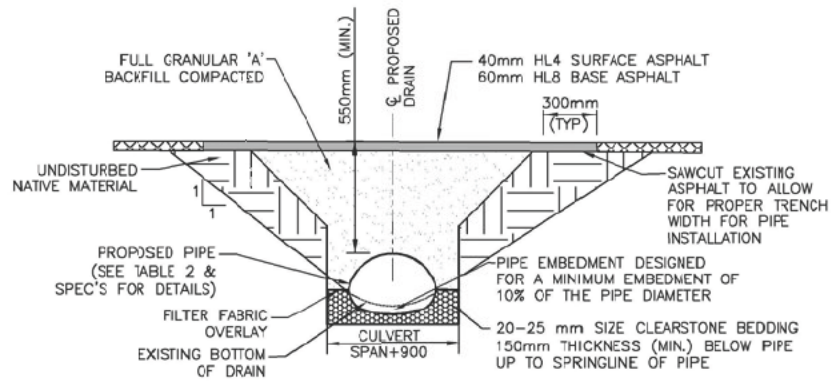

ROAD BRIDGE CROSS SECTION
BRIDGE NO. 7
NOT TO SCALE

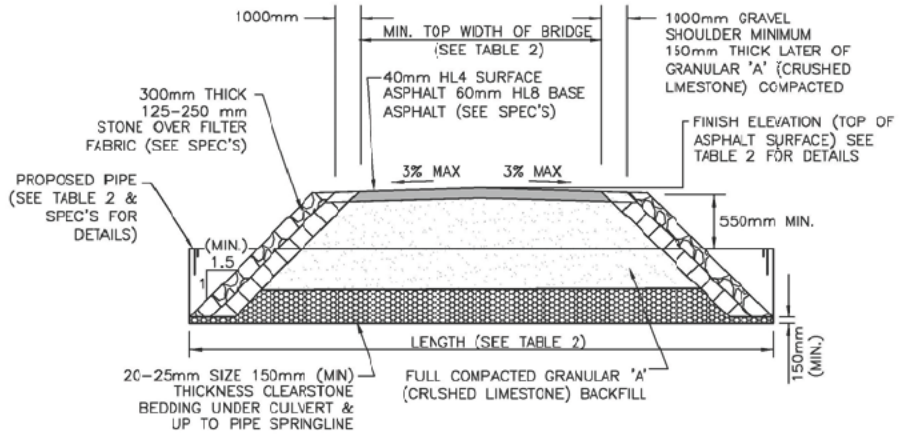

ROAD BRIDGE LONGITUDINAL SECTION
BRIDGE NO. 7
NOT TO SCALE

LICENSED PROFESSIONAL ENGINEER
M. D. HERNANDEZ
100078099
Jan 20/23
PROVINCE OF ONTARIO

Conditions of Use

Verify elevations and/or dimensions on drawing prior to use. Report any discrepancies to Dillon Consulting Limited.

Do not scale dimensions from drawing.

Do not modify drawing, re-use it, or use it for purposes other than those intended at the time of its preparation without prior written permission from Dillon Consulting Limited.

No.	ISSUED FOR	DATE	BY
3	FINAL REPORT SUBMISSION	18 JAN 23	MDH
2	PUBLIC INFORMATION CENTRE	25 MAR 22	MDH
1	CLIENT REVIEW	4 MAR 22	MDH

DESIGN: MDH	REVIEWED BY: CDP
DRAWN: CEM/CEM	CHECKED BY: TRO
DATE: January 18, 2022	
SCALE: AS SHOWN	

DILLON CONSULTING

PROJECT NO: 17-6773

DRAWING SCALES BASED ON A 11" X 17" SHEET

Drainage Report for the
GOUIN DRAIN
Town of Tecumseh & City of Windsor

SHEET TITLE: FUTURE BRIDGE No. 7 REPLACEMENT

PAGE NO.: 17 of 21

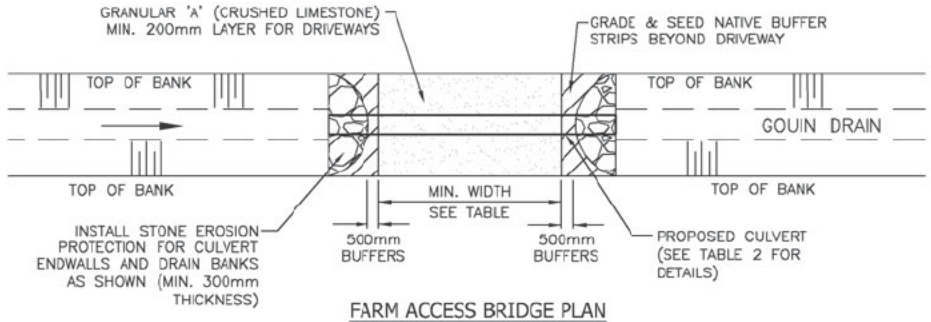

FARM ACCESS BRIDGE PLAN
BRIDGE NO. 6, 14, 15, 17, 18
NOT TO SCALE

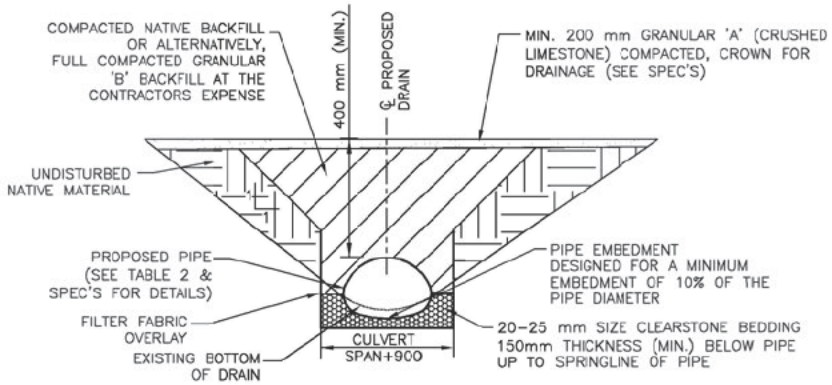

FARM ACCESS BRIDGE CROSS SECTION
BRIDGE NO. 6, 14, 15, 17, 18
NOT TO SCALE

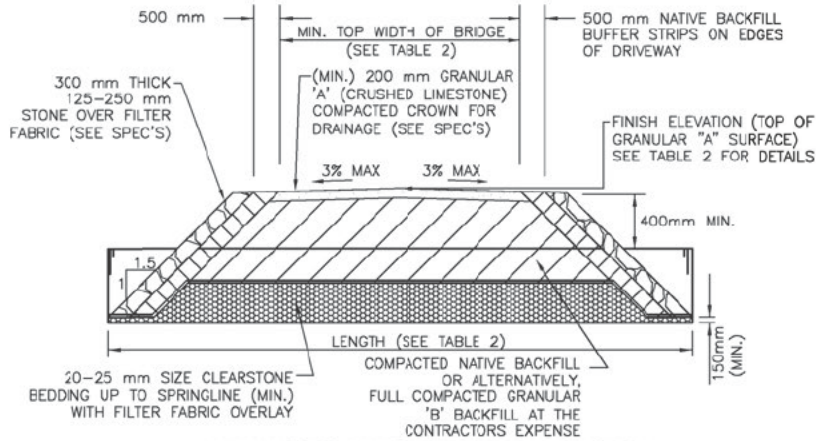

FARM ACCESS BRIDGE LONGITUDINAL SECTION
BRIDGE NO. 6, 14, 15, 17, 18
NOT TO SCALE

LICENSED PROFESSIONAL ENGINEER
M. D. HERNANDEZ
100078099
Jan 20/23
PROVINCE OF ONTARIO

Conditions of Use

Verify elevations and/or dimensions on drawing prior to use. Report any discrepancies to Dillon Consulting Limited.

Do not scale dimensions from drawing.

Do not modify drawing, re-use it, or use it for purposes other than those intended at the time of its preparation without prior written permission from Dillon Consulting Limited.

No.	ISSUED FOR	DATE	BY
3	FINAL REPORT SUBMISSION	18 JAN 23	MDH
2	PUBLIC INFORMATION CENTRE	25 MAR 22	MDH
1	CLIENT REVIEW	4 MAR 22	MDH

DESIGN MDH	REVIEWED BY CDP
DRAWN KAW/OEM	CHECKED BY TRO
DATE January 18, 2022	
SCALE AS SHOWN	

DILLON CONSULTING

PROJECT NO 17-6773

DRAWING SCALES BASED ON A 11" X 17" SHEET

'SCHEDULE G'

Drainage Report for the
GOUIN DRAIN
Town of Tecumseh & City of Windsor

SHEET TITLE
FUTURE BRIDGE No. 6, 14, 15, 17, 18 REPLACEMENT

PAGE NO. 18 of 21

Jan 20, 2023 – 10:08am C:\pw working directory\projects to 2017\33cam\d0411685\176773-03-PROF-DES-GOUIN.dwg

NOTES:

- BLOCK END WALLS TO BE DESIGNED AND SEALED BY A PROFESSIONAL ENGINEER LICENSED IN THE PROVINCE OF ONTARIO
- SUPPLY & INSTALL OBJECT MARKER SIGNS WA-33L/R AS PER THE ONTARIO TRAFFIC MANUAL

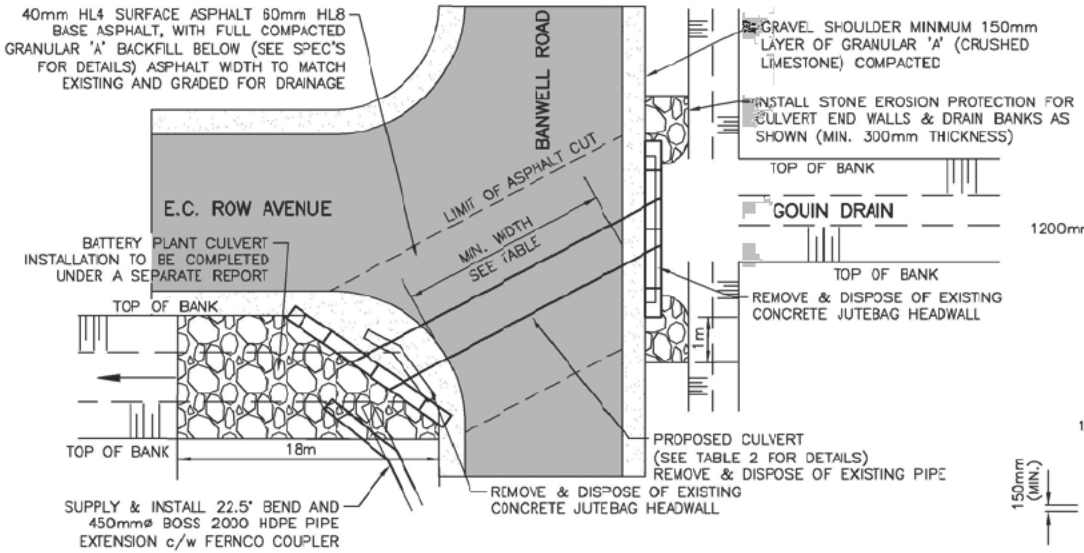

ROAD BRIDGE PLAN
BRIDGE NO. 13
NOT TO SCALE

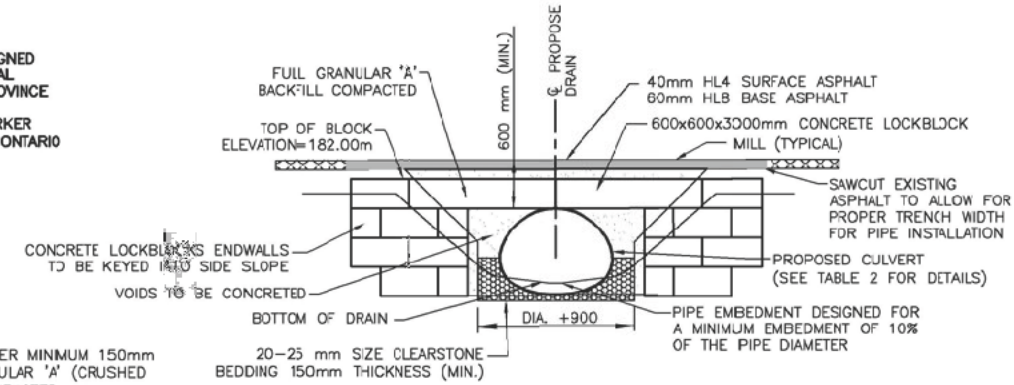

ROAD BRIDGE CROSS SECTION
BRIDGE NO. 13
NOT TO SCALE

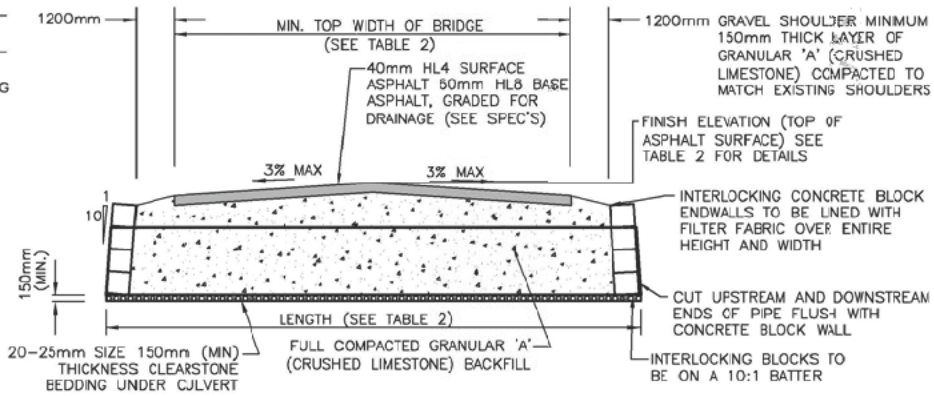

ROAD BRIDGE LONGITUDINAL SECTION
BRIDGE NO. 13
NOT TO SCALE

LICENSED PROFESSIONAL ENGINEER
M. D. HERNANDEZ
100078099
Jan 20/23
PROVINCE OF ONTARIO

Conditions of Use

Verify elevations and/or dimensions on drawing prior to use. Report any discrepancies to Dillon Consulting Limited.

Do not scale dimensions from drawing.

Do not modify drawing, re-use it, or use it for purposes other than those intended at the time of its preparation without prior written permission from Dillon Consulting Limited.

No.	ISSUED FOR	DATE	BY
3	FINAL REPORT SUBMISSION	18 JAN 23	MDH
2	PUBLIC INFORMATION CENTRE	25 MAR 22	MDH
1	CLIENT REVIEW	4 MAR 22	MDH

DESIGN: MDH	REVIEWED BY: CDP
DRAWN: OEM	CHECKED BY: TRO
DATE: January 18, 2022	
SCALE: AS SHOWN	

DILLON CONSULTING

PROJECT NO: 17-6773

DRAWING SCALES BASED ON A 11" X 17" SHEET

Drainage Report for the
GOUIN DRAIN
Town of Tecumseh & City of Windsor

SHEET TITLE: FUTURE BRIDGE No. 13 REPLACEMENT

PAGE NO. 19 of 21

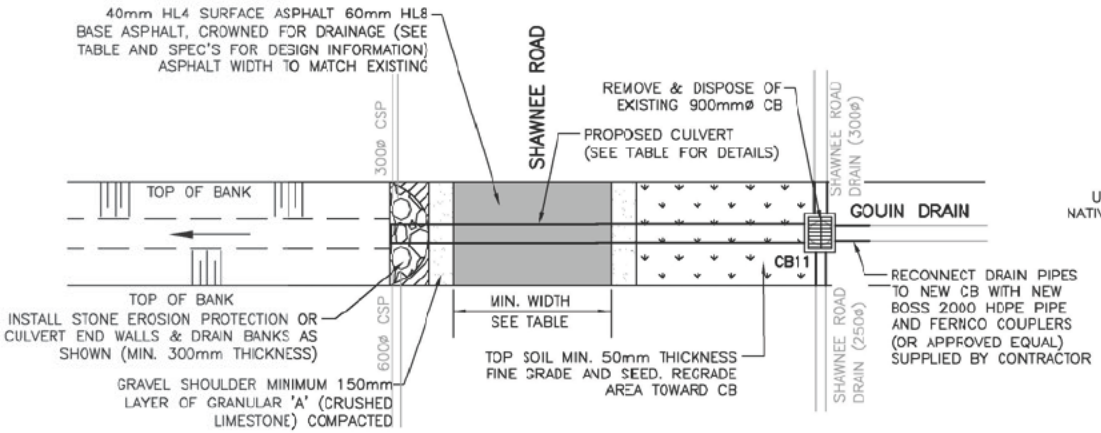

ROAD BRIDGE PLAN
BRIDGE NO. 20
NOT TO SCALE

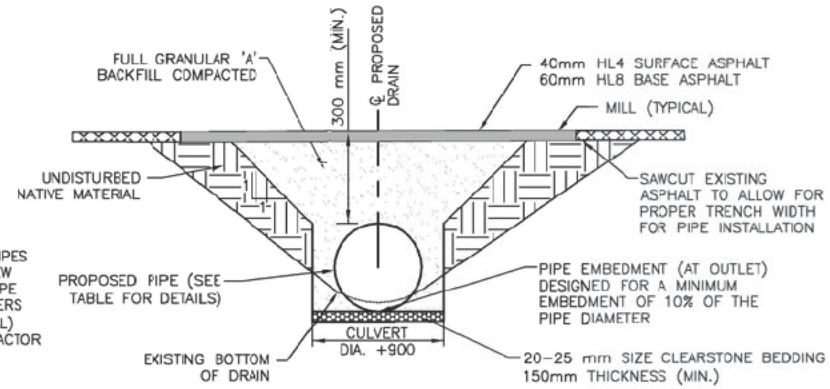

ROAD BRIDGE CROSS SECTION
BRIDGE NO. 20
NOT TO SCALE

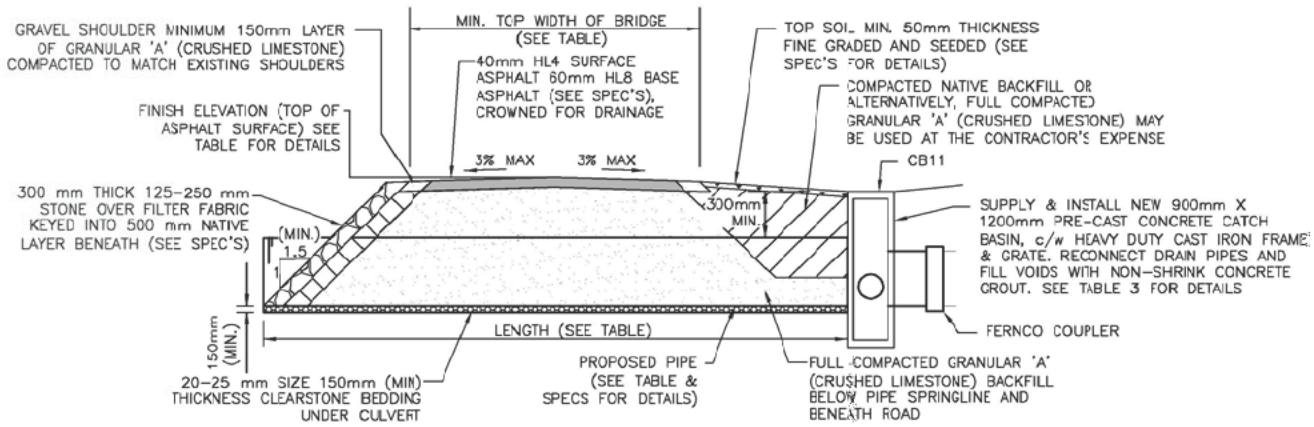

ROAD BRIDGE LONGITUDINAL SECTION
BRIDGE NO. 20
NOT TO SCALE

TABLE 3 - CATCH BASIN DETAILS	
DESCRIPTION	CB11
SIZE (mm)	900x1200
GRATE	HEAVY DUTY
RIM ELEVATION (m)	182.71
INVERTS (m)	181.42 300ø(N)
	181.41 250ø(S)
	181.38 600ø(E)
	181.38 750ø(W)

LICENSED PROFESSIONAL ENGINEER
M. D. HERNANDEZ
100078099
Jan 20/23
PROVINCE OF ONTARIO

Conditions of Use

Verify elevations and/or dimensions on drawing prior to use. Report any discrepancies to Dillon Consulting Limited.

Do not scale dimensions from drawing.

Do not modify drawing, re-use it, or use it for purposes other than those intended at the time of its preparation without prior written permission from Dillon Consulting Limited.

No	ISSUED FOR	DATE	BY
3	FINAL REPORT SUBMISSION	18 JAN 23	MDH
2	PUBLIC INFORMATION CENTRE	25 MAR 22	MDH
1	CLIENT REVIEW	4 MAR 22	MDH

DESIGN MDH	REVIEWED BY CDP
DRAWN OEM	CHECKED BY TRO
DATE January 18, 2022	
SCALE AS SHOWN	

DILLON CONSULTING
PROJECT NO 17-6773
DRAWING SCALES BASED ON A 11" X 17" SHEET

Drainage Report for the
GOUIN DRAIN
Town of Tecumseh & City of Windsor

SHEET TITLE FUTURE BRIDGE No. 20 REPLACEMENT

PAGE NO 20 of 21

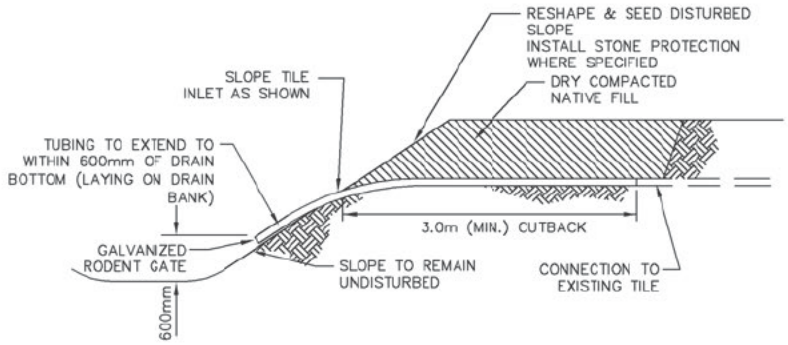

TILE DRAINAGE TUBING TILE INLET REPLACEMENT DETAIL
(FOR TILES 150mmØ OR SMALLER)
N.T.S.

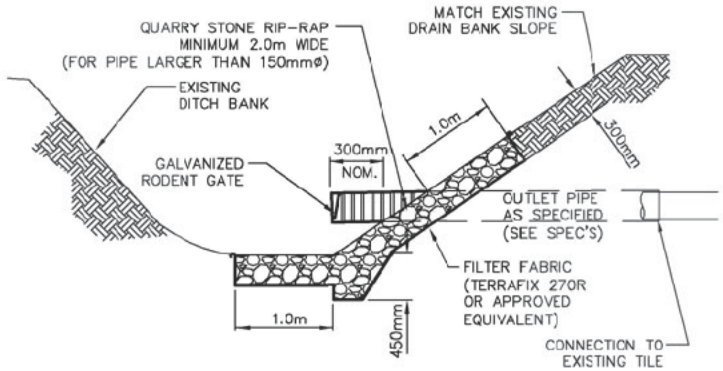

TYPICAL CSP TILE INLET REPLACEMENT DETAIL
N.T.S.

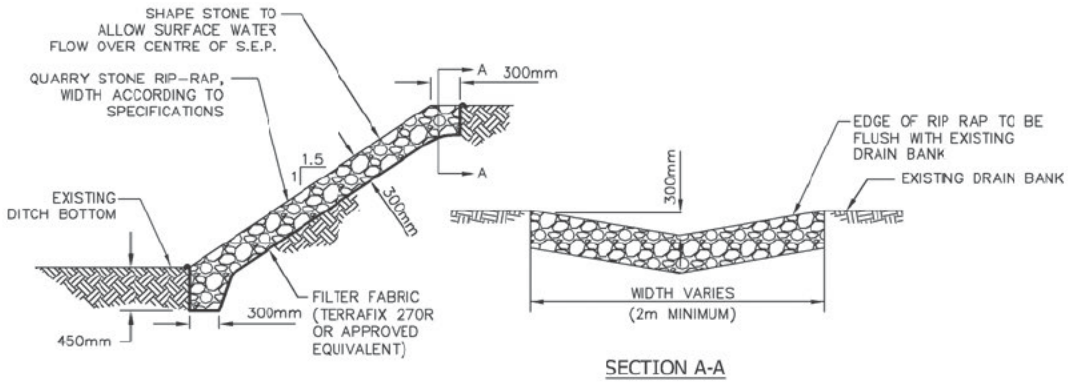

SECTION A-A

TYPICAL DITCH BANK WASHOUT DETAIL w/ RIP RAP
N.T.S.

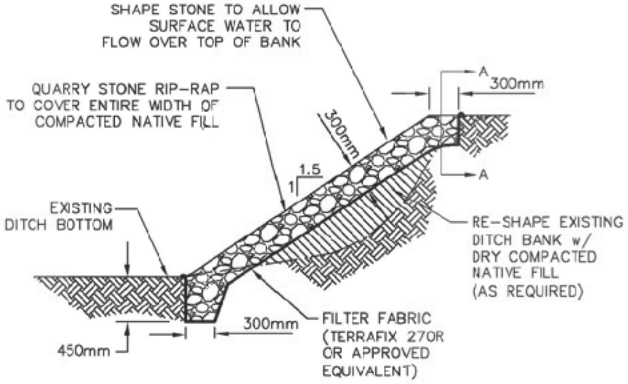

TYPICAL DITCH BANK WASHOUT DETAIL w/ BACKFILLING & RIP RAP
N.T.S.

LICENSED PROFESSIONAL ENGINEER
M. D. HERNANDEZ
100078099
Jan 20/23
PROVINCE OF ONTARIO

Conditions of Use

Verify elevations and/or dimensions on drawing prior to use. Report any discrepancies to Dillon Consulting Limited.

Do not scale dimensions from drawing.

Do not modify drawing, re-use it, or use it for purposes other than those intended at the time of its preparation without prior written permission from Dillon Consulting Limited.

No.	ISSUED FOR	DATE	BY
3	FINAL REPORT SUBMISSION	18 JAN 23	MDH
2	PUBLIC INFORMATION CENTRE	25 MAR 22	MDH
1	CLIENT REVIEW	4 MAR 22	MDH

DESIGN: MDH	REVIEWED BY: CDP
DRAWN: OEM	CHECKED BY: TRO
DATE: January 18, 2022	
SCALE: AS SHOWN	

DILLON CONSULTING

PROJECT NO: 17-6773

DRAWING SCALES BASED ON A 11" X 17" SHEET

Drainage Report for the
GOUIN DRAIN
Town of Tecumseh & City of Windsor

SHEET TITLE: MISCELLANEOUS DETAILS

PAGE NO: 21 of 21

Unfinished Regular Council Business

No.	Meeting Date	Resolution	Subject	Action/Direction	Depart.	Status/Action Taken
19/18	May 22, 2018		Property Standards By-Law (Zoning)	It is directed that Administration harmonize the by-law regarding disconnected tractor-trailers on residential properties to be consistent within the Town.	DS	To be addressed in the new Comprehensive Zoning By-law: Update to Council in Q2 followed by Public Meetings
02/20	October 27, 2020	RCM 318/20	Regulations Regarding Storage and Parking of Commercial and Recreational Vehicles/Trailers in Residents' Zones	Administration to bring considerations to regulate the parking of these vehicles, units and trailers within the municipal right-of-way in the former Town of Tecumseh, to ensure that visibility sightlines are maintained to private driveways, and to recommend appropriate regulations surrounding the parking of such vehicles, units and trailers in the minimum side yard of a private property at the time the Town's zoning By-law is reviewed.	DS	To be addressed in the new Comprehensive Zoning By-law: Update to Council in Q2 followed by Public Meetings
03/20	October 27, 2020	RCM 319/20	Short Term Rentals	Administration undertake a regulatory review for both the short-term, owner-absent rental and the home-sharing short term rental categories.	DS	To be addressed in the new Comprehensive Zoning By-law: Update to Council in Q2 followed by Public Meetings
04/20	November 10, 2020	RCM 341/20	By-law to Prohibit and Regulate Public Nuisances Related to Odours and Lighting from Cannabis Cultivation	Administration to review and report back to Council on the appropriateness of a By-law in accordance with the *Municipal Act* that will address and regulate nuisances related to odour and lighting from the cultivation of cannabis plants; and investigate opportunities to consider the matter with the other municipalities in Essex County to try to seek a common regional regulatory approach.	DS	To be addressed in the new Comprehensive Zoning By-law: Update to Council in Q2 followed by Public Meetings
01/22	September 13, 2022	RCM 269/22	E Scooters/ Bike Program	That Administration be directed to investigate the possibility of a pilot project with vendors that offer public access to utilize their e scooters or e bikes as an alternative mode of transportation on a pay-to-ride basis, and report back to Council with options and budget implications in time for consideration during the 2023 budget deliberations.	CRS	Report to Council RCM April 25.

The Corporation of the Town of Tecumseh

By-Law Number 2023-051

Being a by-law to confirm the proceedings of the April 11, 2023 Regular Meeting of the Council of The Corporation of the Town of Tecumseh.

Whereas pursuant to Section 5(1) of the Municipal Act, 2001, S.O. 2001, c.25 as amended, the powers of a municipality shall be exercised by its Council; and

Whereas pursuant to Section 5(3) of the *Municipal Act, 2001*, S.O. 2001, c.25 as amended, a municipal power, including a municipality's capacity, rights, powers and privileges under Section 8 of the *Municipal Act, 2001*, S.O. 2001, c.25 as amended, shall be exercised by by-law unless the municipality is specifically authorized to do otherwise; and

Whereas it is deemed expedient that the proceedings of the Council of The Corporation of the Town of Tecumseh at this meeting be confirmed and adopted by by-law.

Now Therefore the Council of The Corporation of The Town of Tecumseh Enacts as follows:

1. **That** the actions of the Council of The Corporation of the Town of Tecumseh in respect of all recommendations in reports and minutes of committees, all motions and resolutions and all other action passed and taken by the Council of The Corporation of the Town of Tecumseh, inclusive of documents and transactions approved and/or entered into during the April 11, 2023, meeting of Council, are hereby adopted and confirmed, as if the same were expressly embodied in this By-law.

2. **That** the Mayor and proper officials of The Corporation of the Town of Tecumseh are hereby authorized and directed to do all the things necessary to give effect to the action of the Council of The Corporation of the Town of Tecumseh during the said April 11, 2023, meeting referred to in paragraph 1 of this By-law.

3. **That** the Mayor and the Clerk are hereby authorized and directed to execute all documents necessary to give effect to the action(s) taken by this Council as described in Section 1 of this By-law and to affix the Corporate Seal of The Corporation of the Town of Tecumseh to all documents referred to in said paragraph 1.

Read a first, second, third time and finally passed this 11th day of April, 2023.

Gary McNamara, Mayor

Robert Auger, Clerk